Quick Start Guide for Wireless Q45 Sensor Networks Formed Using the -B2Q Gateway

This Quick Start Guide describes how to configure a wireless network with two Wireless Q45 Sensors and one Gateway when using the DX80G2M6-B2Q Gateway's DIP switch-based mapping.



Step 1: Wire the Gateway's Power and I/O

Wire the power, discrete I/O, and analog I/O on the Gateway according to the wiring diagram shown. To create a network with up to 47 Nodes, use a PLC and Modbus to map the I/O.

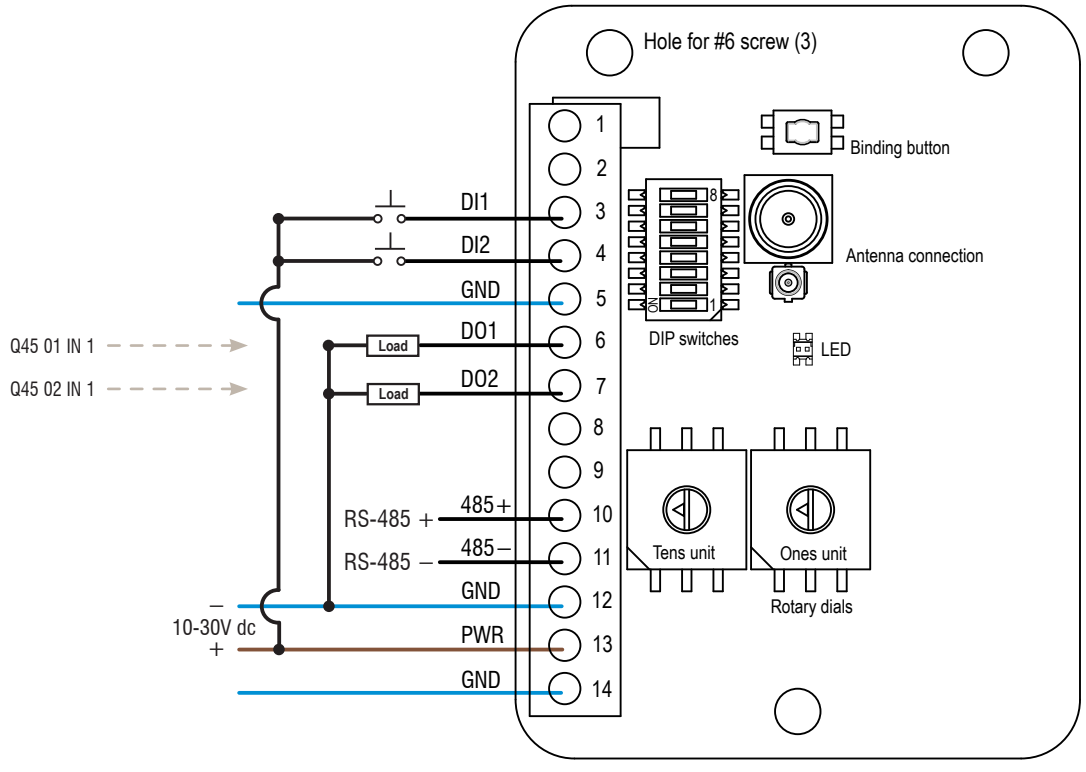

ПРОМЭЛЕКТРОНИКА/ sales@prom-elec.com

Step 2: Apply Power to the Wireless Q45 Sensors

To conserve battery power, the Wireless Q45 Sensor ships from the factory in storage mode. To wake the Q45:

1. Loosen the clamp plate on the top of the Wireless Q45 Sensor and lift the cover.
2. Press and hold the button for five seconds. When the Q45 is on, the red LED flashes.

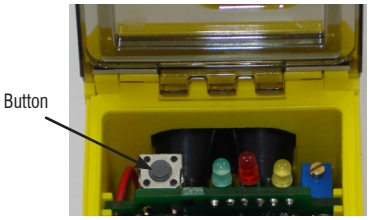

Step 3: Bind the Wireless Q45 Sensors to the Gateway

Binding Wireless Q45 Sensors to their Gateway ensures the Q45s only exchange data with the Gateway they are bound to. To create your network, bind the Wireless Q45 Sensors to the Gateway and assign them a unique Node address.

1. On the Gateway, enter binding mode by triple-clicking the button. The LED flashes red and green alternately.
2. On the Gateway, use both rotary dials to assign the Node address for the Q45. Use the left dial for the left digit and the right dial for the right digit. For example, to assign your Q45 to Node 01, set the left dial to 0 and the right dial to 1.
3. On the Wireless Q45 Sensor, enter binding mode by triple-clicking the button. While in binding mode, the red and green LEDs flash alternately. After the Q45 is bound, the LEDs flash together four times. The Q45 automatically exits binding mode.
4. Label the sensor with the Q45's Node address.
5. Repeat steps 2 through 4 for the second Wireless Q45 Sensor.
6. On the Gateway, single-click the button to exit binding mode.

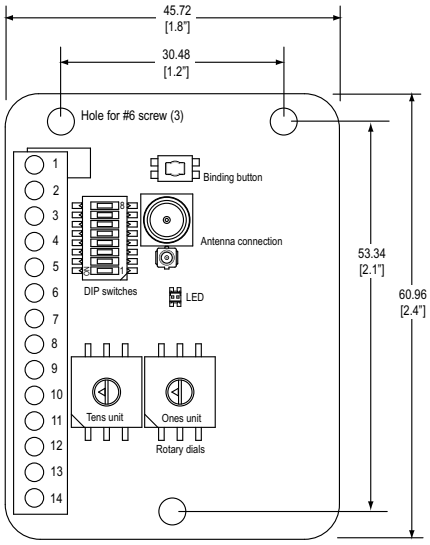

Step 4: Verify Radio Communication

To verify the Gateway and Wireless Q45 Sensor are communicating:

- Gateway's LED is solid green.
- Until communication is established with the Gateway, the Q45's red LED flashes.
- After communication is established, the Q45's green LED flashes.

Step 5: Test the Wireless Q45 Sensor Operation

Mount the Wireless Q45 Sensor in your application and view the yellow LED, which indicates the sensor's output.

After 15 minutes of inactivity, the LED turns off to conserve power. To activate the LED, push the button once.

For alignment instructions, refer to the Wireless Q45 Sensor's datasheet.

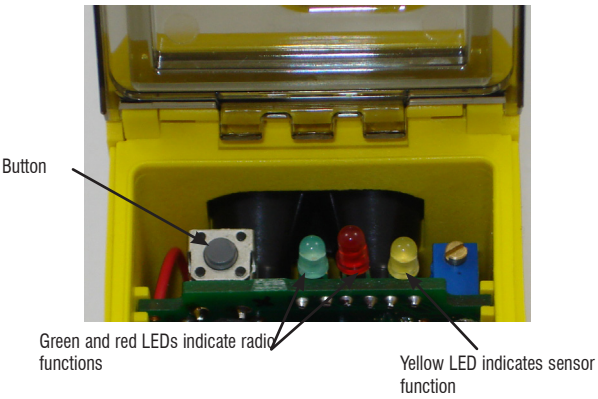

Banner Engineering Corp. • Minneapolis, MN U.S.A
www.bannerengineering.com • Tel: 763.544.3164