56910 (presplus sensor)C0A 8/16/03 11:33 PM Page 1

Instruction Manual



PresencePLUS

Models P1B65Q and P2B65Q

Pixel-Counting Sensors

WARNING . . . Not To Be Used for Personnel Protection

Never use these products as sensing devices for personnel protection. Doing so could lead to serious injury or death.

These sensors do NOT include the self-checking redundant circuitry necessary to allow their use in personnel safety applications. A sensor failure or malfunction can cause either an energized or de-energized sensor output condition. Consult your current Banner Safety Products catalog for safety products which meet OSHA, ANSI and IEC standards for personnel protection.

P/N 56910COA 08/03

ПРОМЭЛЕКТРОНИКА/ sales@prom-elec.com

56910 (presplus sensor)C0A 8/16/03 11:33 PM Page 2

56910 (presplus sensor)C0A 8/16/03 11:33 PM Page 1

OVERVIEW

Product Description 2
Application Examples 2

SYSTEM COMPONENTS

Controller 4
Cables 4
Lenses 4
Mounting Brackets 4
Light Sources 4
Kits 4

SENSOR SETUP

Changing Lens Filters 6
Mounting the Lens 6
Appropriate Sensing Environment 6
Mounting the Sensor 7
Connecting Cables 8

LIGHTING OPTIONS

Lighting Techniques 10

SENSOR OPERATION

Status Indicators 16
Programming and Monitoring the Sensor 17
Controller Menu 18

MAINTENANCE

Cleaning the System 19

REFERENCE

Specifications 20
Dimensions 22
Appendix A: Selecting a Lens 25
Appendix B: Component Lists 30
Glossary 32

56910 (presplus sensor)C0A 8/16/03 11:33 PM Page 2

Product Description

PresencePLUS™ Pixel-Counting Sensor Models P1B65Q/P2B65Q* house a 512 x 384 CMOS pixel array and a programmable microprocessor. Each sensor captures a gray-scale image, converts the image to binary format based on adjustable gray-scale thresholds, counts the number of white or black pixels, and judges the image as "PASS" or "FAIL" by comparing the counts to reference counts.

An image is captured in response to a signal from a user-supplied trigger input device. The trigger device is typically a presence-sensing device such as a photoelectric sensor that delivers an input signal coincident with the passage of the leading or trailing edge of an object to be inspected.

The binary value of each pixel is determined by two adjustable gray-scale thresholds. The lower threshold defines the division between "light" and "dark". The sensor counts all light pixels as white and all dark pixels as black. The upper threshold defines the limit above which pixels will be ignored. The sensor may be set to count either black or white pixels and to accept a percentage above or below reference pixel counts.

The PresencePLUS™ sensor is configured for trigger input, signal output, lighting options and other sensor parameters using either the remote controller (Model PRC1) and/or the PresencePLUS PC software, depending on sensor model. While the sensor is in operation, the controller or PC may be used to view captured images and monitor sensor performance.

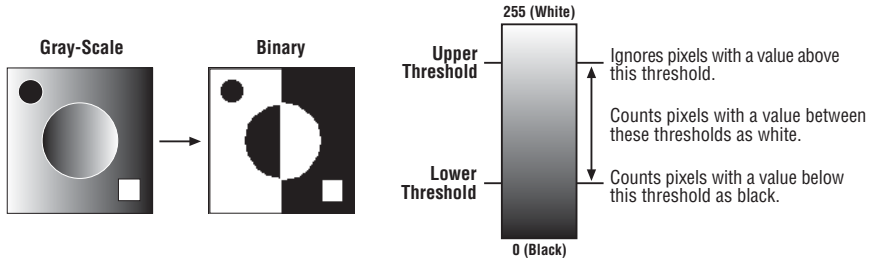

Gray-scale images are converted to black and white by comparing the value of each pixel to adjustable gray-scale thresholds

For more information about programming and operating the sensor, see page 17.

Application Examples

The PresencePLUS sensor is a solution to many inspection applications where a defect can occur anywhere within the sensor's field of view, and where a configuration of multiple discrete sensors is either cost-prohibitive or mechanically impractical. The inspection examples shown on the next page illustrate a few application possibilities.

*Model P2B65Q available fall 2000.

56910 (presplus sensor)C0A 8/16/03 11:33 PM Page 3

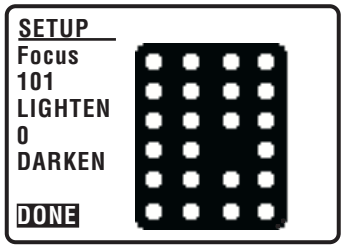

Controller LCD Display

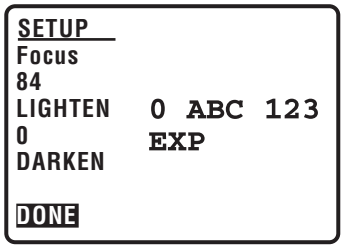

Controller LCD Display

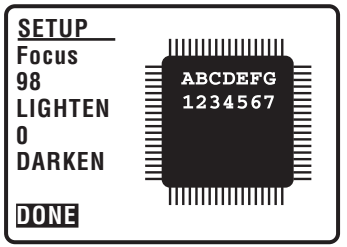

Controller LCD Display

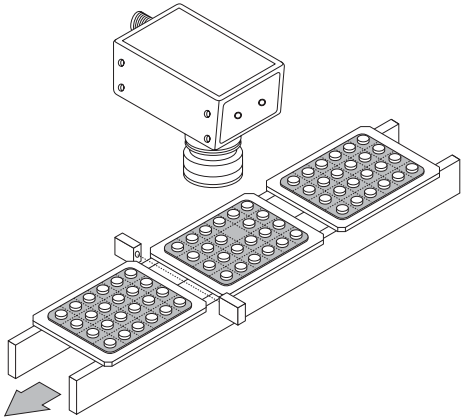

Missing Tablet Detection

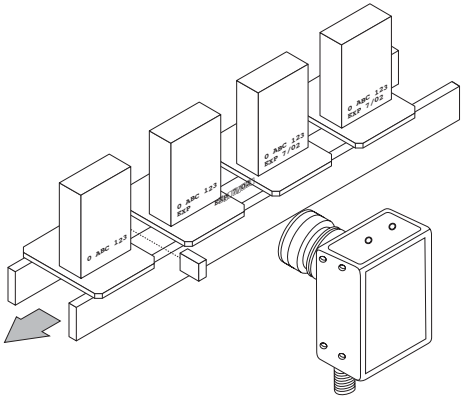

Missing Date/Lot Code Inspection and Print Quality Control

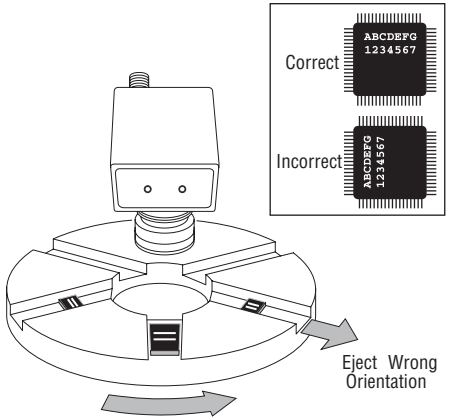

IC Orientation Inspection

56910 (presplus sensor)C0A 8/16/03 11:33 PM Page 4

System Components

PresencePLUS Sensor models P1B65Q/P2B65Q require several other components to create a working system: controller (hand-held controller or PC), cable, lens, mounting bracket (if needed), light source, trigger device (user-supplied), and power supply (user-supplied). For more information about system components, see page 30 or visit Banner's web site at www.bannerengineering.com.

Controller/PC

The PresencePLUS model P1B65Q sensor can be configured, programmed, and monitored by the PresencePLUS controller (model PRC1), and the model P2B65Q sensor by the PresencePLUS controller or by the PresencePLUS PC software.

Cables

Banner offers quick-disconnect cables in multiple lengths, with straight or right-angle connectors.

Lenses

Banner offers several C-mount lens choices; or the lens may be user-supplied. For information about how to select a lens, see pages 25-29.

Mounting Brackets

Banner offers several mounting options. For bracket information, see pages 23-24 and 30.

Light Sources

Banner offers a number of light sources. The light source may be user-supplied. For more information, see pages 10-15 and 30.

Kits

Banner PresencePLUS kits include a sensor, cable, bracket, and light source, and may include a controller. For an example of kit options, see page 31.

Example System

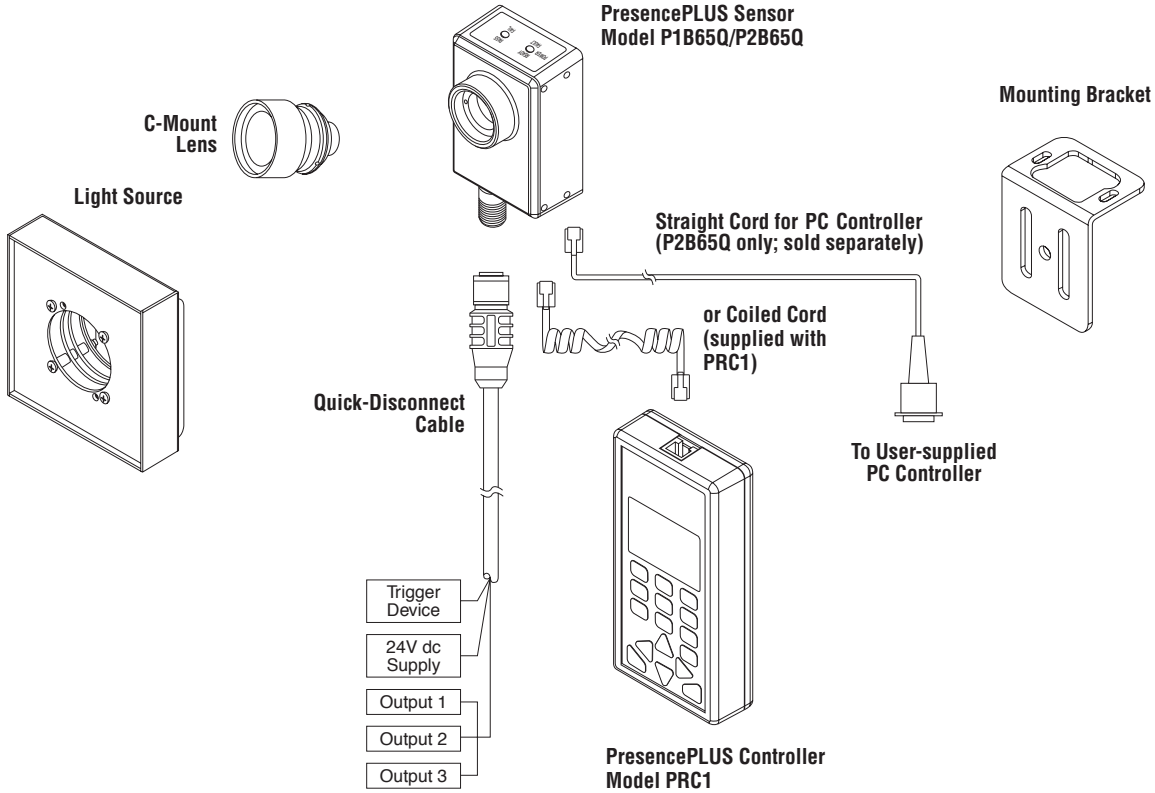

56910 (presplus sensor)C0A 8/16/03 11:33 PM Page 6

Sensor Setup

Changing Lens Filters

The lens filter is located behind the lens, held in place with a retainer ring.

To add or remove a filter, use the tool supplied with the sensor to remove and replace the retainer ring.

A red filter is pre-installed in each sensor for use with red light sources. Remove this red filter if using a light source other than red.

NOTE: When using more than one filter, the order of the filters' placement will not affect performance.

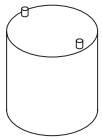

Retainer Ring Tool

Mounting the Lens

Remove the protective cover from the sensor. Remove the two protective covers from the lens. Install the lens onto the sensor by gripping the silver lens base and turning clockwise (RH thread).

NOTE: Do not install by gripping and turning the plastic lens shroud. Also, see CAUTION, below.

After focusing the lens, use the supplied Allen wrench to lock the lens by clockwise rotation (RH thread), finger tight, in the three set screws on the base of the lens.

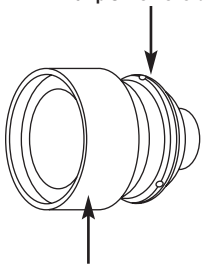

Appropriate Sensing Environment

The sensing location must meet the following criteria for reliable operation:

- Stable ambient temperature: 0 to 50°C (+32 to 122°F)
- Ambient relative humidity: 35 to 90%, non-condensing
- Stable ambient lighting: no large, quick changes in light level; no direct or reflected sunlight
- No significant vibration or mechanical shock
- No liquid splash
- No contact with corrosive or volatile materials or atmosphere
- Minimal dust or dirt

CAUTION . . .
Sensor contains ESD-sensitive components. Use proper ESD (electrostatic discharge) precautions to avoid potential damage to sensor.

56910 (presplus sensor)C0A 8/16/03 11:33 PM Page 7

Mounting the Sensor

The sensor has ten M4 x 0.7 tapped holes: four on each side and two on the base. The sensor is supplied with four M4 sockethead cap screws, washers, and lockwashers, and a 3 mm Allen wrench.

The sensor may be secured to a Banner-supplied mounting bracket, or to any flat surface up to 2.0 mm (0.08") thick.

For dimensional details of the sensor and brackets, see pages 22-24.

Securing to Mounting Brackets

Two mounting bracket choices include:

- Column-mounting bracket SMBPCM
- Base-mounting bracket SMBPBM

Secure the sensor to the column-mounting bracket with the four M4 Phillips flathead screws supplied with the bracket (two on each side).

Secure the sensor to the base-mounting bracket with two of the M4 sockethead cap screws, washers, and lockwashers supplied with the sensor.

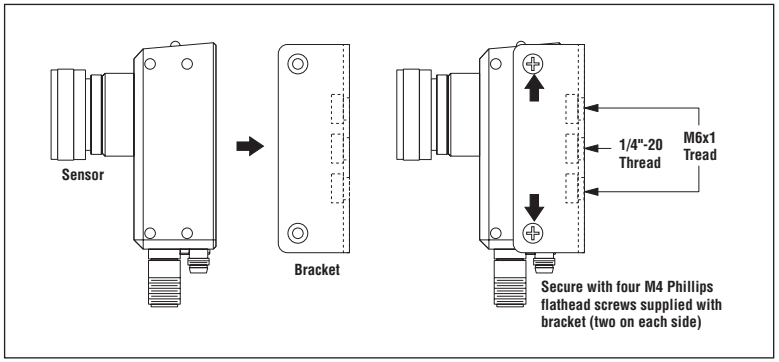

Column-Mounting Bracket SMBPCM

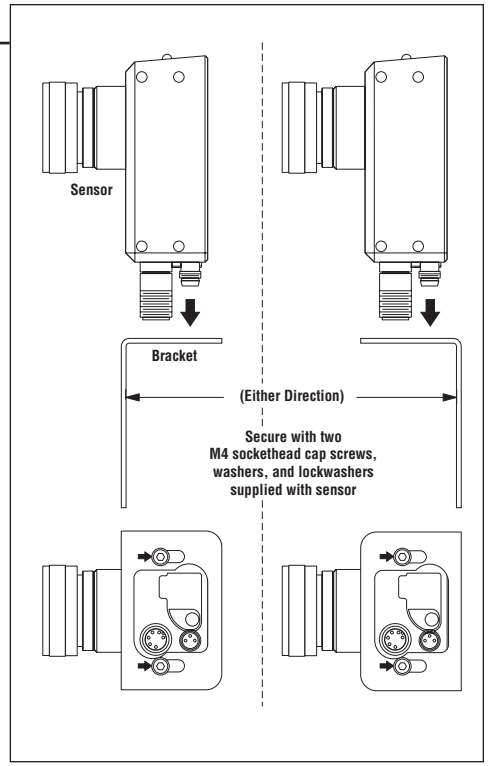

Base-Mounting Bracket SMBPBM

56910 (presplus sensor)C0A 8/16/03 11:33 PM Page 8

Connecting Cables

Before connecting cables, be sure the power supply is OFF. See CAUTION on page 6. For complete sensor specifications and hookup diagrams, see pages 20-21.

Power

The power source is user-supplied.

Alone, the sensor requires 22 to 26V dc; with a maximum current of 250 mA (exclusive of loads and the current required by the PRC1 controller and optional attached light source).

Using the PRC1 controller, the maximum current is 450 mA. Using the LEDR140 light source, the maximum current is 550 mA. Using both, the maximum current is 750 mA.

Connect the Brown wire of the sensor cable (MQDC-6 Series) to +V and the Blue wire to dc common. Attach the connector end of the cable to the sensor.

Controller/PC

PRC1: A coiled cord with modular plugs is supplied with the PRC1 controller. Insert one plug into the controller and the other plug into the sensor. Be sure the plugs click into place.

PC: A straight cord with a modular plug on one end and a 9-pin connector on the other is sold for use with the PresencePLUS P2B65Q sensor and a PC. Insert the modular plug into the sensor and the 9-pin connector into a serial port of a PC. Be sure the plug on the sensor clicks into place.

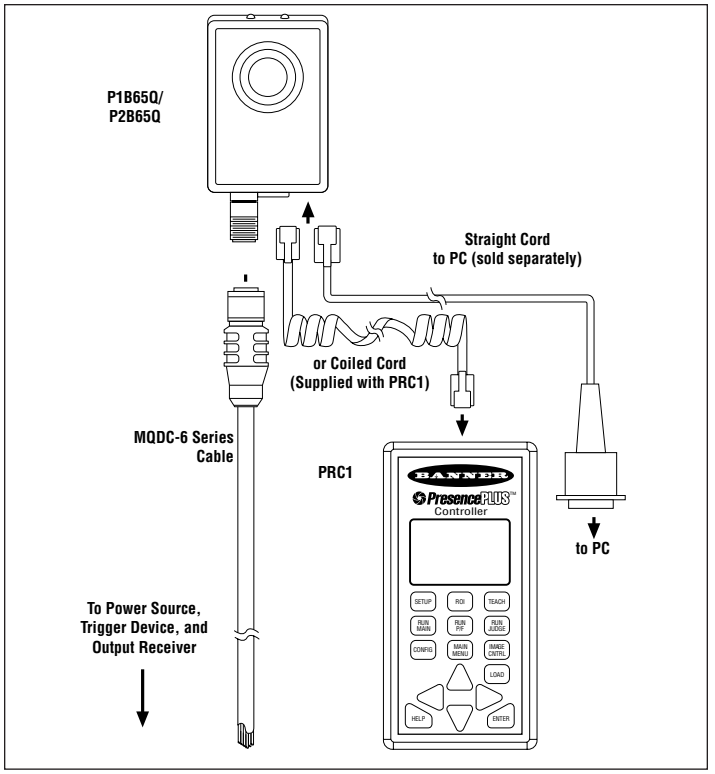

Controller Connection to the Sensor

56910 (presplus sensor)C0A 8/16/03 11:33 PM Page 9

Trigger Input

Connect the Pink wire of the sensor cable to the user-supplied trigger device.

The default trigger input setting accepts signals from a trigger device with an NPN (current sinking) output. If the trigger device output is PNP (current sourcing), use the PRC1 controller to reconfigure either sensor or the PresencePLUS PC software to reconfigure the P2B65Q sensor.

Signal Output

The sensor provides three SPST solid-state contacts which may be individually programmed for either NPN (current sinking) or PNP (current sourcing). Each output is capable of switching up to 26V dc max at 50 mA max. Outputs are protected against continuous overload or short circuit.
Note: Output loads must not be returned to any voltage greater than +V.

Configure the sensor cable output wires as follows: White = Output #1, Black = Output #2, Gray = Output #3. Use the PRC1 controller to set output parameters for either sensor, or the PresencePLUS PC software to set P2B65Q sensor parameters.

56910 (presplus sensor)C0A 8/16/03 11:33 PM Page 10

Lighting Techniques and Sources

Proper lighting is often the determining factor between an application's success or failure. The following options have been developed to overcome the most common lighting obstacles.

Ring Light

A ring light is a general-purpose lighting technique. The light mounts directly to the sensor for easy setup. The light illuminates any object directly in front of the sensor.

Advantages: The ring light provides even illumination for small objects. It also reduces shadows on images with protrusions. Because the light is attached to the sensor, the light will be centered on the image.

Disadvantages: For larger objects, the corners of the image may lose illumination intensity. This may create a "halo" of dark pixels along the outer edge of the image. Highly reflective surfaces may reflect a circular glare pattern back to the sensor.

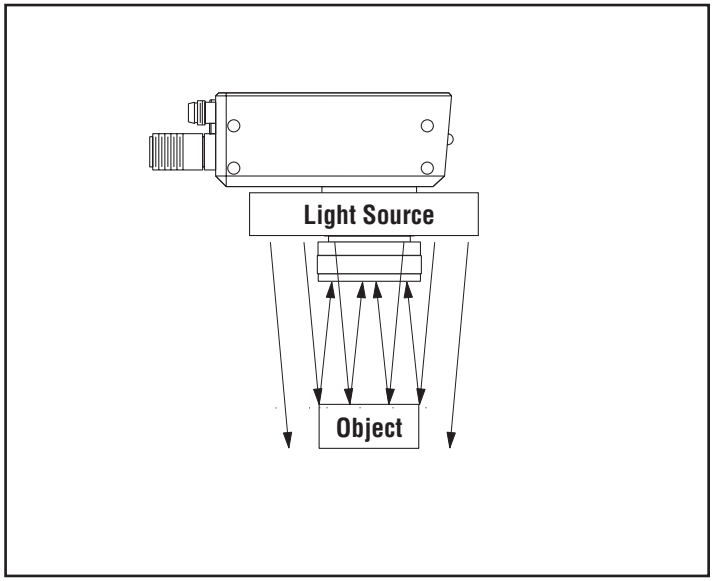

Ring Light

56910 (presplus sensor)C0A 8/16/03 11:33 PM Page 11

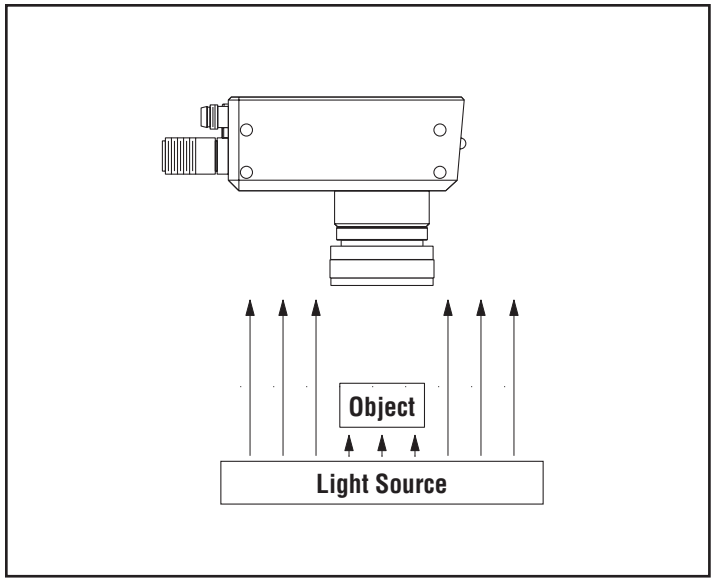

Backlight

Backlight

For backlighting, the light is placed behind the target, facing directly into the sensor. When the target is between the light and the sensor, it blocks the light, creating a silhouette. The sensor may inspect the silhouette for proper size and/or shape.

Advantages: The backlight is not affected by color or texture variations in the target. The backlight can show the diameter of a rounded target consistently. Through-holes in a target will be readily apparent.

Disadvantages: The backlight must be placed behind the target, which may be physically impractical. Backlighting does not highlight changes in a target's surface. The light must be larger than the area of inspection.

Directional Front Light

Directional front lighting may use one or more lights to highlight specific areas of a target. Placing light at a certain angle may highlight a specific feature of a target, allowing the sensor to detect the presence or absence of that feature.

Advantages: The directional front light can be used to create glare and shadows with a strong illumination source. It can highlight a specific surface angle. For reflective surfaces, using a directional front light avoids the ring of glare caused by a ring light.

Disadvantages: The directional front light creates glare and shadows. Surfaces with protrusions may create a shadow over the inspection area. Highly reflective surfaces may produce “hot spots” of glare on the image.

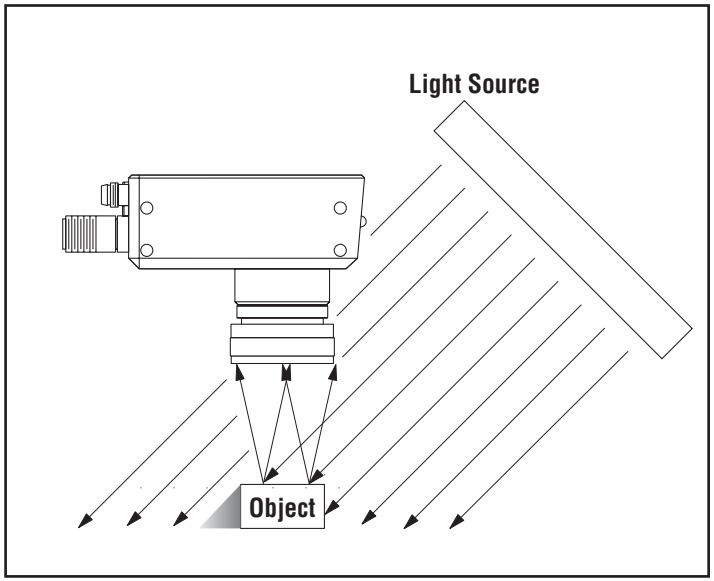

Directional Front Light

56910 (presplus sensor)C0A 8/16/03 11:33 PM Page 13

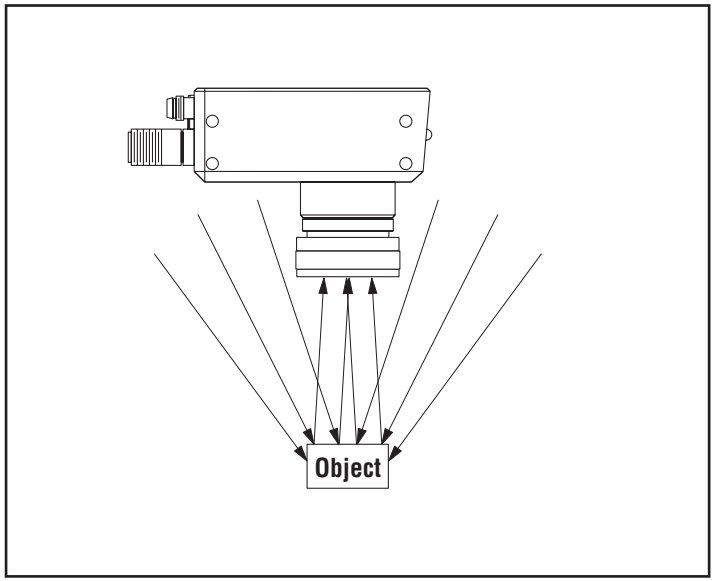

Diffused Light

Diffused Light

Diffused lighting is used when direct lighting produces too much glare and shadow. To diffuse a light source, a diffuser is placed between the light source and the sensing target. A diffuser may be made from frosted glass, acrylic, or any translucent material that spreads the light evenly. For highly diffused light, a "dome light" or "cloudy day illuminator" may be used by reflecting the light off an opaque white hemisphere, onto the sensing target.

Advantages: Minimizes glare and shadowing; with a dome light the shadows and glares are removed almost completely. Illuminates curved surfaces evenly.

Disadvantages: Diffusing light lowers the illumination intensity, causing the surface features of an object to become less distinct. The dome light must be bigger than the sensing target.

56910 (presplus sensor)C0A 8/16/03 11:33 PM Page 14

Low-Angle Light

Low-angle light is projected perpendicular to the inspection direction. If a sensing target does not break the light beam, the sensor will not receive the light and the entire image will appear dark.

Advantages: This technique highlights surface irregularities, such as dust, small dents, scratches and other surface defects.

Disadvantages: Low-angle lighting is effective only in small areas because light widens as it travels away from its source, becoming less perpendicular. Low-angle light provides “hot spots” and a high degree of shadowing.

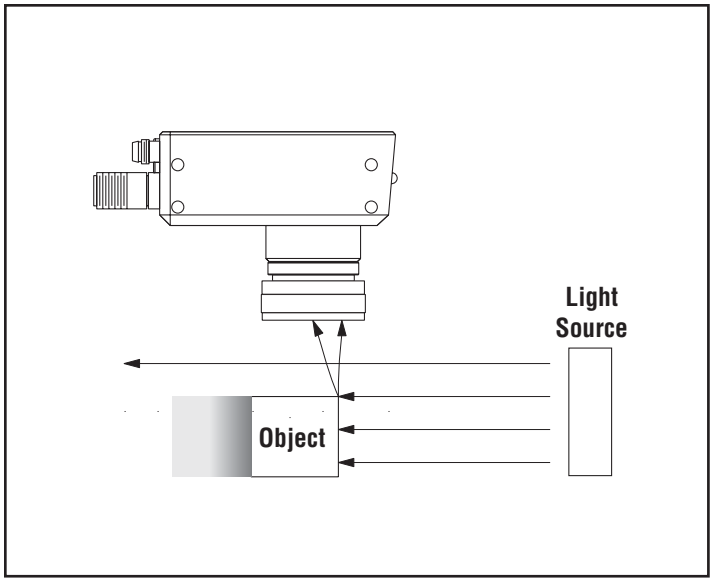

Low-Angle Light

56910 (presplus sensor)C0A 8/16/03 11:33 PM Page 15

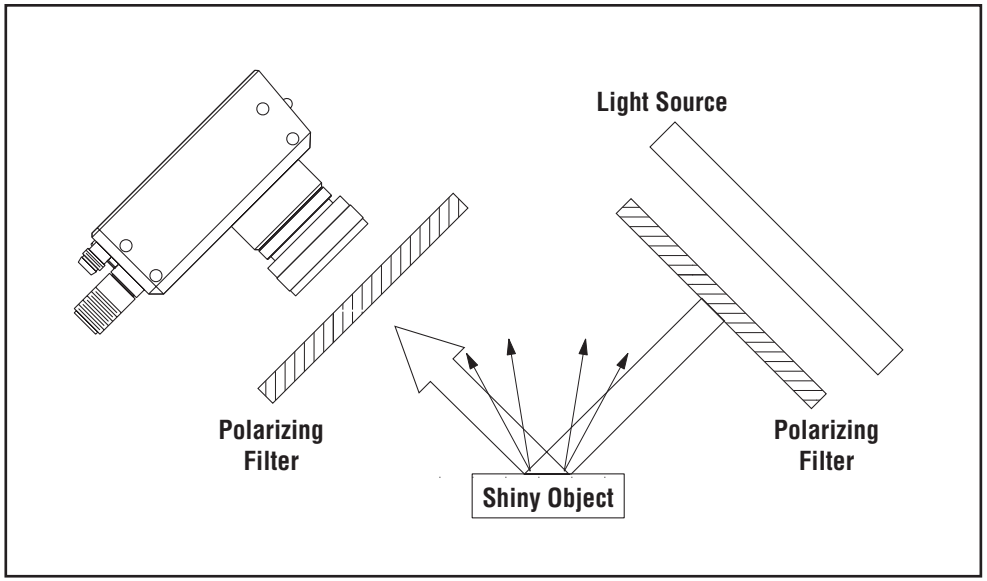

Polarized Light

Polarized Light

Polarized light is created when a polarizing filter is placed in front of the light source and in front of the imaging chip of the sensor. The filters must be rotated 90° out of phase to one another to reduce glare. Polarizing may be used in conjunction with other lighting techniques.

Advantages: Polarizing an image removes glare from a highly reflective surface. The filters also act as diffusers to provide even illumination.

Disadvantages: Polarizing the light significantly lowers illumination intensity.

56910 (presplus sensor)C0A 8/16/03 11:33 PM Page 16

Status Indicators

Two LEDs on the top of the sensor indicate the current sensor and judgment status.

Sensor Status Indicator

When this indicator is **flashing yellow**, the power is ON and the sensor is powering up (initializing its parameters and executing self-diagnostics).

When this indicator is **solid yellow**, the power is ON, the sensor is *not* running and will *not* process (judge) triggers. It will, however, accept setup operations from the controller.

When this indicator is **green**, the power is ON and the sensor is in RUN mode and READY to process (judge) triggers.

When this indicator is **red**, the power is ON and a hardware FAULT has been detected.

Judgment Status Indicator

When this indicator is **green**, the judgment result of the last trigger was PASS.

When this indicator is **red**, the judgment result of the last trigger was FAIL.

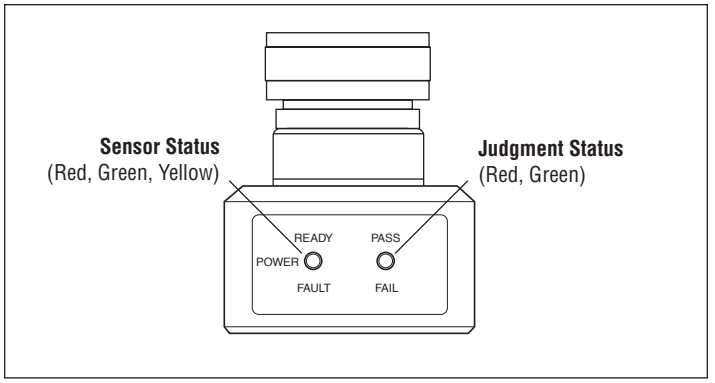

Status Indicators

56910 (presplus sensor)C0A 8/16/03 11:33 PM Page 17

Programming and Monitoring the Sensor

Either PresencePLUS sensor may be programmed and monitored using the companion PresencePLUS PRC1 hand-held remote control microprocessor. The PresencePLUS P2B65Q sensor also may be programmed and monitored using the PresencePLUS PC software.

For complete sensor programming and monitoring instructions using the PRC1 controller, see the PresencePLUS PRC1 Controller Instruction Manual (P/N 57413), supplied with each controller.

For instructions on programming and monitoring the P2B65Q sensor with the PresencePLUS PC software, see the PresencePLUS PC software help menus or documentation. The software and documentation is available on Banner's web site at www.bannerengineering.com.

Depending on the sensing application requirements, programming the sensor involves up to three steps: SETUP, ROI, and TEACH.

In the first step, the SETUP mode is used to adjust the target object within the sensor's pixel array, run the auto-exposure routine, focus the sensor's lens, and lighten or darken the image.

In the second step, the ROI mode may be used to define a Region of Interest (ROI) within the array for judgment or to mask an area to exclude from judgment.

In the third step, the TEACH mode is used to "teach" the sensor to recognize good and (optionally) bad images by presenting a number of product examples. The controller or PC uses the pixel counts from these examples to determine judgment criteria for subsequent sensor operation. Judgment criteria may be manually adjusted.

If the application does not require defining an ROI, masking, or teaching bad product, the QUICK START option provides a simple one-step SETUP, TEACH, and RUN sequence. The resulting judgment criteria may be manually adjusted.

CONFIGURE screens are used to program parameters that typically only need to be set once. Configuration parameters include selecting the application type (to enable the most appropriate auto-exposure settings), which pixel color to count (white or black) and lighting options.

Up to four different sets of parameters may be saved as files from either sensor to the controller, or multiple sets of parameters may be saved as files from the P2B65Q to a PC using the PresencePLUS PC software. This feature allows parameters to be downloaded to the sensor when setting up different product runs or programming more than one sensor.

After the sensor has been programmed and configured, the controller or PC is used to put the sensor into RUN mode. While the sensor is in operation, RUN screens may be used to monitor PASS/FAIL and pixel count statistics, view captured images, or adjust configuration settings and gray-scale thresholds.

56910 (presplus sensor)C0A 8/16/03 11:33 PM Page 18

Controller Menu

QUICK START	• Automatically set judgment criteria and put the sensor into RUN mode
SETUP	• Run the auto-exposure routine • Focus the lens • Lighten or darken the image
ROI	• Define region of interest for judgment • Mask area to exclude from judgment • Adjust focus • Adjust gray-scale thresholds
TEACH	• Set judgment criteria • Adjust judgment criteria before operation
RUN	• View PASS and FAIL statistics • View pixel count statistics • Adjust judgment criteria during operation • View images
CONFIGURE	• Set configuration parameters: – Application type – Pixel color to count (black or white) – LED lights – Auto light compensation

56910 (presplus sensor)C0A 8/16/03 11:33 PM Page 19

Cleaning the System

Regularly remove any dust or dirt from the sensor using a soft cloth.

Cleaning the Lens

Regularly remove any dust, dirt, or fingerprints from the sensor's lens.

1. Blow off dust using anti-static compressed air.
2. If necessary, use a lens cloth and lens cleaner or window cleaner to wipe off remaining debris. Do not use any other chemicals for cleaning.

Cleaning the Light Source

Regularly remove any dust, dirt, or fingerprints from the light source. Follow the manufacturer's directions for cleaning.

1. Blow off dust using anti-static compressed air.
2. If necessary, and if allowed by the manufacturer for the light source used, turn the light source off and allow it to cool down, then use a lens cloth and lens cleaner or window cleaner to wipe off remaining debris. Do not use any other chemicals for cleaning.

56910 (presplus sensor)C0A 8/16/03 11:33 PM Page 20

PresencePLUS Sensor Models P1B65Q and P2B65Q

Supply Voltage and Current

22 to 26V dc; 250 mA max (exclusive of loads and the current required by the PRC1 controller and optional Banner-supplied light sources)

Supply Protection Circuitry

Protected against reverse polarity and transient voltages

Array Size

512 x 384 CMOS pixel array

Output Configuration

Three SPST solid-state contacts which may be individually programmed for either NPN (sinking) or PNP (sourcing)

Output Rating

50 mA max, each output

OFF-state leakage current < 100 µA

ON-state saturation voltage < 1V at 50 mA (NPN); < 2V at 50 mA (PNP)

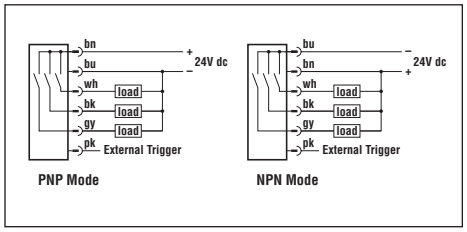

Wiring Diagram

Output Protection Circuitry

Protected against continuous overload or short circuit

Sensor Response Time

Each of the three outputs switch within 50 milliseconds from the leading edge of the trigger input signal. Additional delay may be programmed.

Trigger Input

The sensor may be configured to accept either a current sinking (NPN) or current sourcing (PNP) input. Internal pullup (NPN) or pulldown (PNP) is provided:

NPN mode:

ON < 2V at 3 mA maximum

OFF >10V

PNP mode:

ON > 10V at 3 mA maximum

OFF < 2V

2 microsecond min. pulse width is required for either mode

Sensor Status Indicator

Yellow (flashing): Power ON, sensor initializing and executing self-diagnostics

Yellow (solid): Power ON, sensor not in RUN mode

Green: Power ON, sensor in RUN mode, READY to process triggers

Red: Power is ON, hardware fault has been detected

56910 (presplus sensor)C0A 8/16/03 11:33 PM Page 21

PresencePLUS Sensor Models P1B65Q and P2B65Q (cont.)

Judgment Status Indicator
Green: Result of last trigger was PASS
Red: Result of last trigger was FAIL

Construction
Housing is aluminum with anodized and painted finish

Lens Mount
Standard C-mount (1"-32 UN)

Environmental Rating
IP20; NEMA 1

Connections
6-pin Euro-style quick-disconnect fitting for connection to the MQDC-6 Series cable (cables are ordered separately)

3-pin Pico-style quick-disconnect fitting for connection to Banner-supplied light sources

Operating Temperature
0 to 50°C (+32 to 122°F)

Maximum Relative Humidity
90% at 50°C (non-condensing)

Pin Out Diagram Corresponding to MQCD-Series Quick-Disconnect Cable

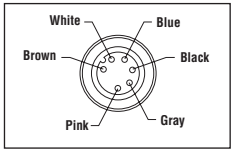

56910 (presplus sensor)C0A 8/16/03 11:33 PM Page 22

PresencePLUS Sensor Models P1B65Q and P2B65Q

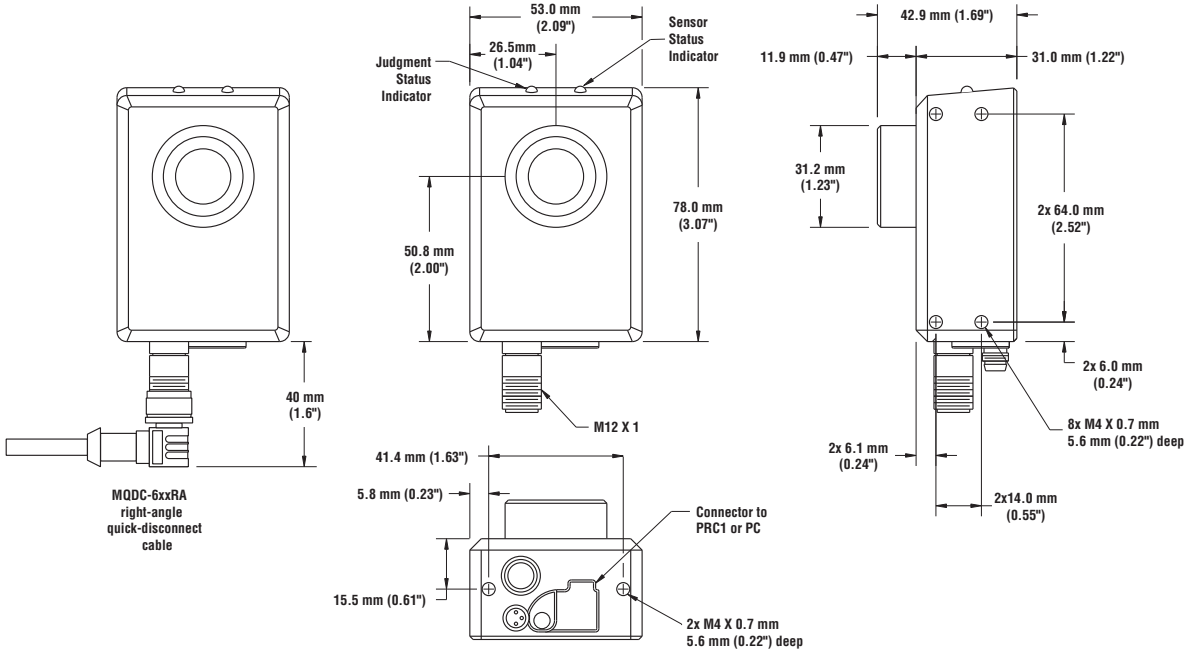

56910 (presplus sensor)C0A 8/16/03 11:33 PM Page 23

Base-Mounting Bracket SMBPBM

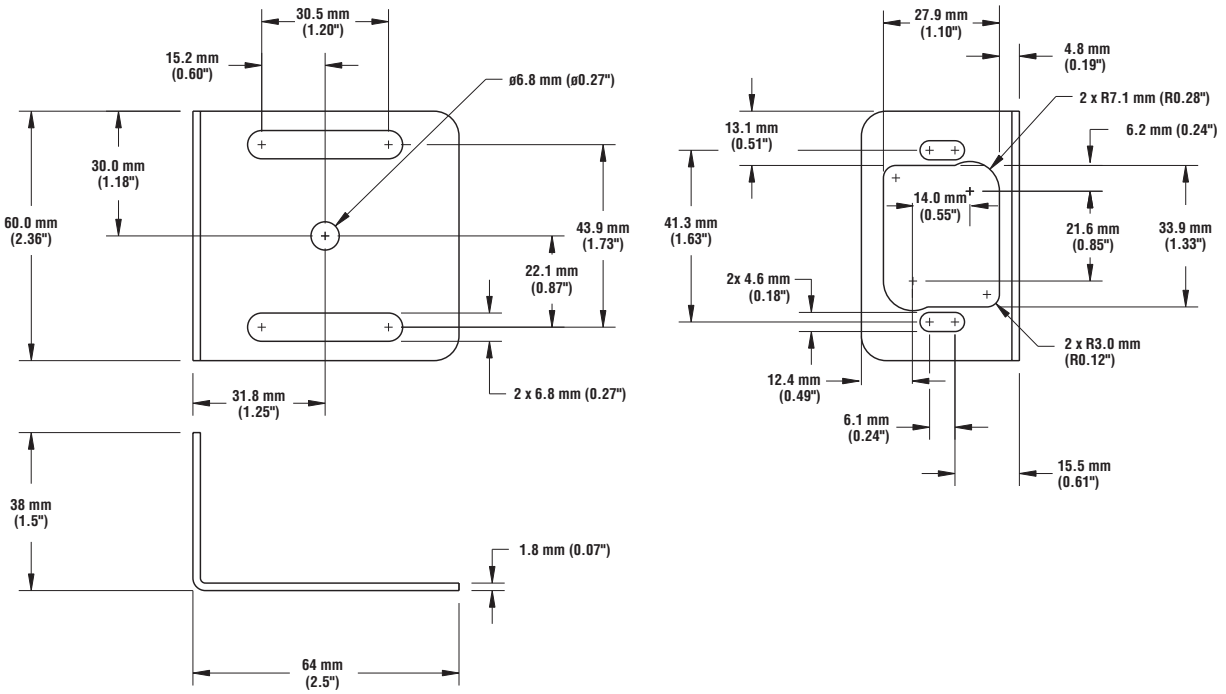

56910 (presplus sensor)C0A 8/16/03 11:33 PM Page 24

Column-Mounting Bracket SMBPCM

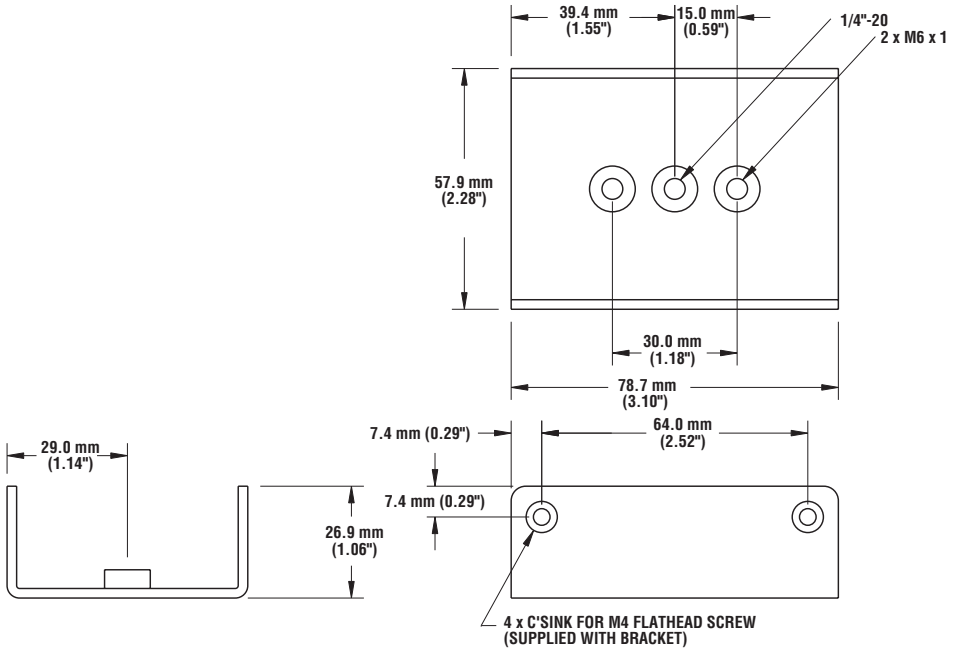

56910 (presplus sensor)C0A 8/16/03 11:33 PM Page 25

Types of Lenses

Any user-supplied C-mount style lens may be used. Lenses may also be purchased through Banner (visit Banner's web site at www.bannerengineering.com); three choices include:

- 8 mm (8 mm focal length) LCF08
- 12 mm (12 mm focal length) LCF12
- 16 mm (16 mm focal length) LCF16

Lens Selection Criteria

To select the best lens for any application, consider the following lens performance criteria:

- Size of the inspection area (field of view)
- Lens-to-object distance, and any distance variation between the sensor and the object (depth of field)
- Required sensing accuracy (resolution)

The lens performance data in this manual is plotted for a sensing range of from 75 to 300 mm (approximately 3" to 12"). For data concerning shorter or longer sensing distances, or for general help with lens selection, contact Banner's factory applications engineers at the address or numbers listed on the back cover.

Field of View

Field of view is the area captured within the pixel array. Because the array is rectangular in shape at 512 x 384 pixels, vertical and horizontal field of view values are not equal.

The vertical field of view is the smaller value, and is parallel to a line drawn down the sensor length from top to bottom, through the center of the lens.

The horizontal field of view is the larger value, and is parallel to a line drawn across the sensor width through the center of the lens, and at right angles to the vertical field of view.

To increase the field of view, increase the lens-to-object distance or use a lens with a shorter focal length.

To reduce the field of view, decrease the lens-to-object distance or use a lens with a longer focal length.

The graphs on page 26 plot the effect of lens-to-object distance on field of view for three lens choices.

56910 (presplus sensor)C0A 8/16/03 11:33 PM Page 26

The top (dashed) line is the horizontal field of view and the lower (solid) line is the vertical field of view.

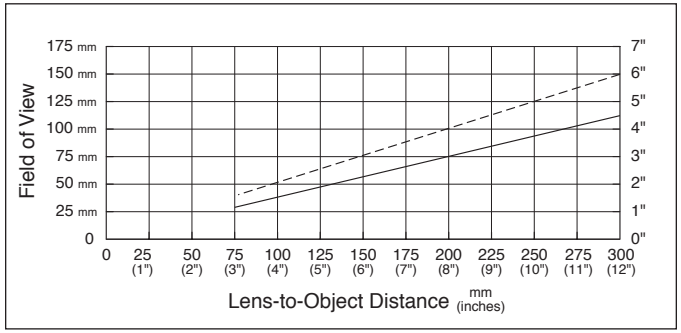

Distance vs. Field of View – 8 mm Lens LCF08

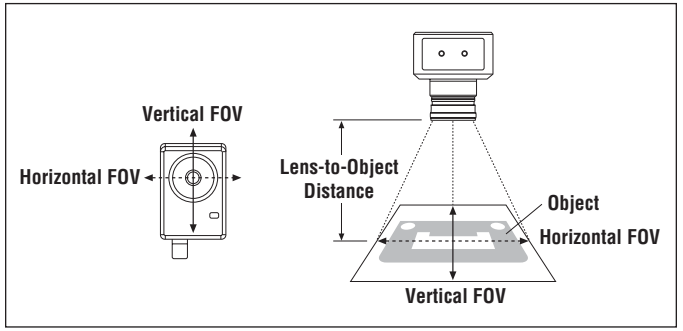

Field of View

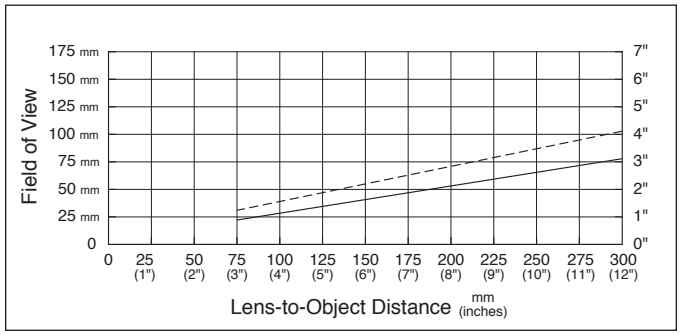

Distance vs. Field of View – 12 mm Lens LCF12

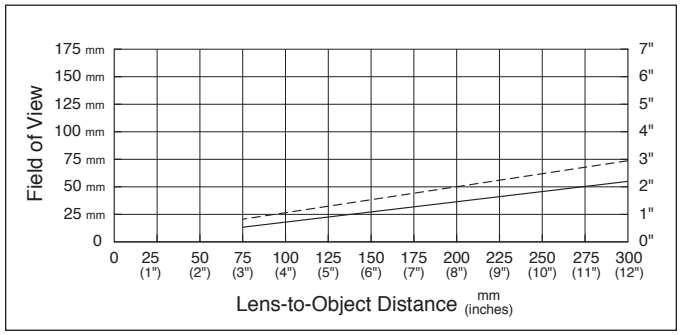

Distance vs. Field of View – 16 mm Lens LCF16

56910 (presplus sensor)C0A 8/16/03 11:33 PM Page 27

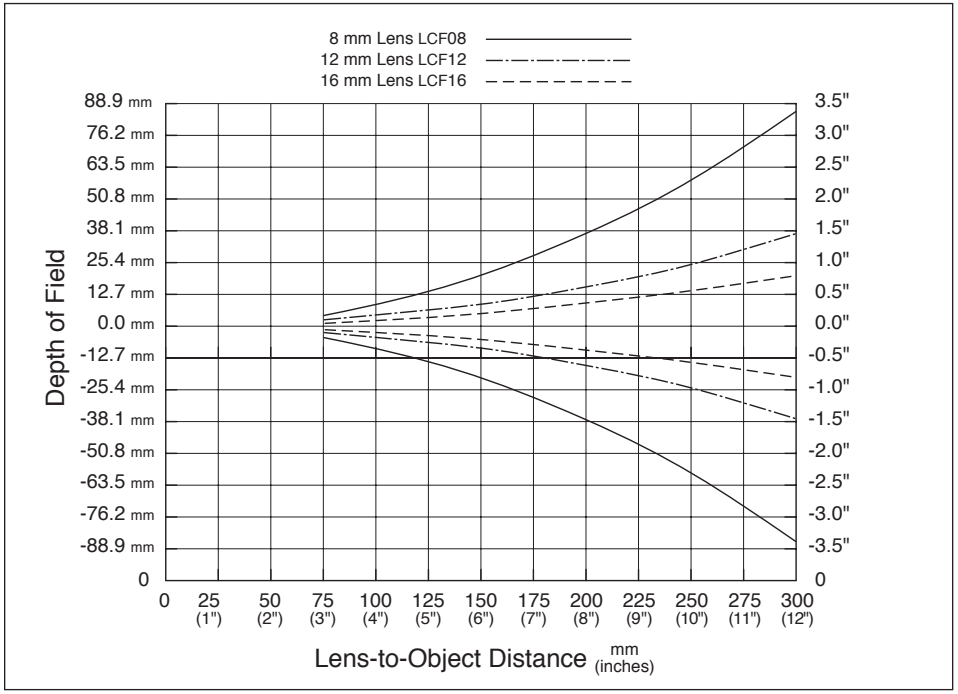

Distance vs. Depth of Field – 8 mm, 12 mm, and 16 mm Lenses (LCF08, LCF12, and LCF16)

Depth of Field

Depth of field (focus tolerance) is the area in front of and beyond the optimal point of focus in which the image quality remains acceptable.

More depth of field accommodates a variable distance between the object and the sensor; for example, if the object or the sensor moves.

Less depth of field reduces interference from the area behind the image you want to capture.

To achieve more depth of field, increase the distance from the lens to the object or use a lens with a shorter focal length.

To achieve less depth of field, reduce the distance from the lens to the object or use a lens with a longer focal length.

The graph on this page plots the effect of lens-to-object distance on depth of field for three lens choices.

56910 (presplus sensor)C0A 8/16/03 11:33 PM Page 28

Resolution

Resolution is expressed as the number of lines per millimeter the sensor can clearly distinguish.

To increase resolution, reduce the lens-to-object distance or use a lens with a longer focal length.

The graph on this page plots the effect of lens-to-object distance on resolution for each type of Banner lens choice.

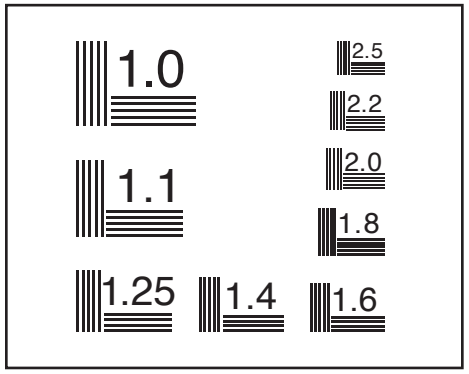

Resolution expressed as lines per millimeter

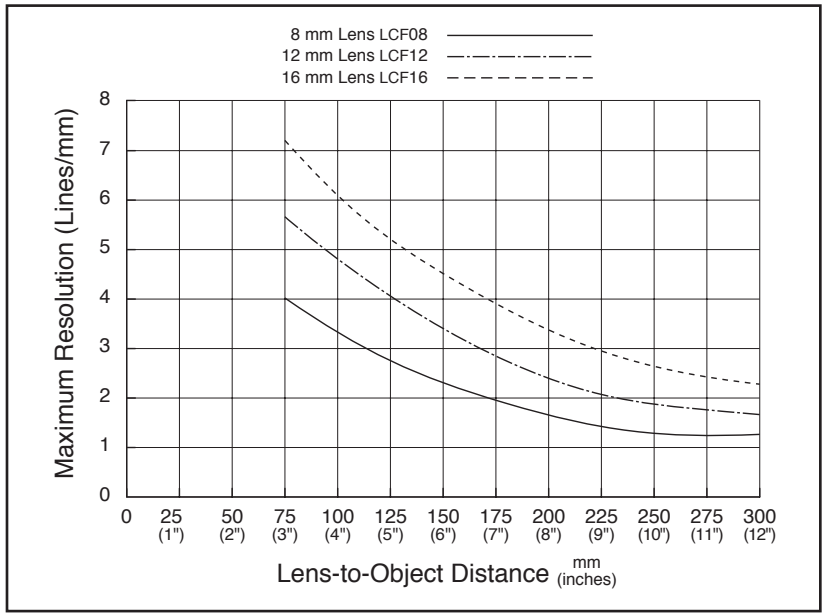

Distance vs. Maximum Resolution – 8 mm, 12 mm, and 16 mm Lenses (LCF08, LCF12, and LCF16)

56910 (presplus sensor)C0A 8/16/03 11:33 PM Page 29

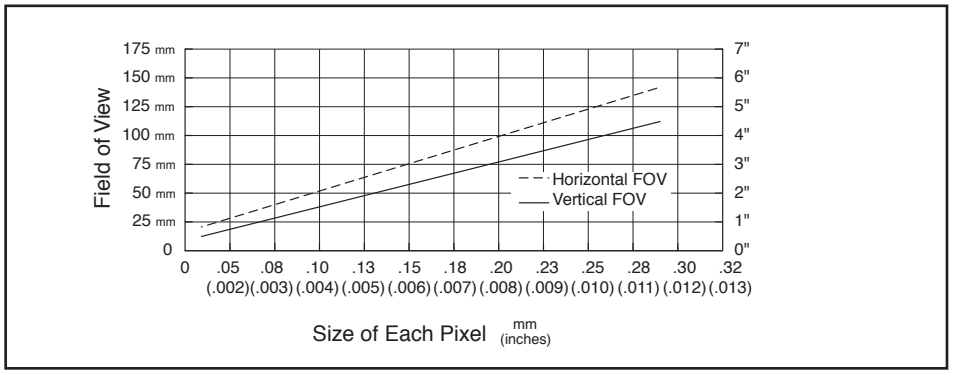

Resolution expressed as pixel size compared with field of view

Another way to express resolution is to compare the field of view with respect to the size of each pixel.

Typically, this is expressed in inches/mm per pixel. For example, if the vertical field of view is 2.0", then each pixel represents a 0.005" segment of the vertical field of view.

56910 (presplus sensor)C0A 8/16/03 11:33 PM Page 30

Appendix B: Component List

Visit Banner's web site at www.bannerengineering.com for the latest list of available components and accessories.

Components & Accessories	Model	P/N
PresencePLUS Sensor (Controller Compatible only)	**P1B65Q**	56519
PresencePLUS Sensor (Controller and PC Compatible)	**P2B65Q**	63310
PresencePLUS PC Interface Cable – 2 m	**P2C-07**	63211
PresencePLUS Controller	**PRC1**	56520
Straight Quick-Disconnect Cable – 2 m	**MQDC-606**	56913
Straight Quick-Disconnect Cable – 5 m	**MQDC-615**	56914
Straight Quick-Disconnect Cable – 9 m	**MQDC-630**	56915
Right-Angle Quick-Disconnect Cable – 2 m	**MQDC-606RA**	61323
Right-Angle Quick-Disconnect Cable – 5 m	**MQDC-615RA**	61324
Right-Angle Quick-Disconnect Cable – 9 m	**MQDC-630RA**	61325
Bracket – Base-Mounting	**SMBPBM**	56949
Bracket – Column-Mounting	**SMBPCM**	56947

Components & Accessories	Model	P/N
C-mount Lens – 8 mm	**LCF08**	57298
C-mount Lens – 12 mm	**LCF12**	57299
C-mount Lens – 16 mm	**LCF16**	56522
Light Source – Visible Red LED Ring Light	**LEDR140**	56521
Light Source – Fluorescent Ring Light (white light, 120V ac)	**HFFW5100**	57388
Light Source – Fluorescent Ring Light (white light, 220V ac)	**HFFW5100A220**	63237
Light Source – Fluorescent Ring Light (UV light, 120V ac)	**HFFWBB**	63238
Replacement Bulb – White Fluorescent Ring	**RFLW5100**	59391
Replacement Bulb – UV Fluorescent Ring	**RFLBB**	63669
Polarizing Filter Kit for LEDR140	**LEDRPFK**	58353
Light source – Visible Red LED Backlight	**LEDRB70x70**	60862
Light source – Visible Red LED Area Light	**LEDRA80x80**	60863

56910 (presplus sensor)C0A 8/16/03 11:33 PM Page 31

PresencePLUS Kits

Visit Banner's web site at www.bannerengineering.com for the latest list of available kits.

Model	Part Number	Cable	Lens	Light	Controller	Bracket	PC Interface Cable
P1B65Q0608DC	61511	2 m (6.5')	8 mm	LEDR140	PRC1	SMBPBM	None
P1B65Q1508DC	61512	5 m (15')	8 mm	LEDR140	PRC1	SMBPBM	None
P1B65Q3008DC	61513	9 m (30')	8 mm	LEDR140	PRC1	SMBPBM	None
P1B65Q0612DC	61514	2 m (6.5')	12 mm	LEDR140	PRC1	SMBPBM	None
P1B65Q1512DC	61515	5 m (15')	12 mm	LEDR140	PRC1	SMBPBM	None
P1B65Q3012DC	61516	9 m (30')	12 mm	LEDR140	PRC1	SMBPBM	None
P1B65Q0616DC	61517	2 m (6.5')	16 mm	LEDR140	PRC1	SMBPBM	None
P1B65Q1516DC	61518	5 m (15')	16 mm	LEDR140	PRC1	SMBPBM	None
P1B65Q3016DC	61519	9 m (30')	16 mm	LEDR140	PRC1	SMBPBM	None
P1B65Q0608DP	61520	2 m (6.5')	8 mm	LEDR140	None	SMBPBM	None
P1B65Q1508DP	61521	5 m (15')	8 mm	LEDR140	None	SMBPBM	None
P1B65Q3008DP	61522	9 m (30')	8 mm	LEDR140	None	SMBPBM	None
P1B65Q0612DP	61523	2 m (6.5')	12 mm	LEDR140	None	SMBPBM	None
P1B65Q1512DP	61524	5 m (15')	12 mm	LEDR140	None	SMBPBM	None
P1B65Q3012DP	61525	9 m (30')	12 mm	LEDR140	None	SMBPBM	None
P1B65Q0616DP	61526	2 m (6.5')	16 mm	LEDR140	None	SMBPBM	None
P1B65Q1516DP	61527	5 m (15')	16 mm	LEDR140	None	SMBPBM	None
P1B65Q3016DP	61528	9 m (30')	16 mm	LEDR140	None	SMBPBM	None

56910 (presplus sensor)C0A 8/16/03 11:33 PM Page 32

Binary
Permitting two possibilities; for example, 0 or 1, ON or OFF, black or white.

Bit
The smallest unit of computer memory.
A bit is either ON or OFF. The sensor captures an 8-bit image. Each 8-bit pixel can display one of 256 shades of gray. When the sensor converts the gray-scale (8-bit) image to binary (1-bit) format, each pixel displays as either black or white.

Depth of field
The area before and beyond the optimal point of focus. More depth of field accommodates lens-to-object variance (movement). Less depth of field reduces background distraction.

Exposure time (Exposure)
The length of time the pixel array is exposed to light during an image capture, specified in milliseconds (ms).

FAIL
The judgment results are not acceptable based on judgment criteria as taught.

Field of view (FOV)
The image area captured within the pixel array.

Focal length
The distance between the rear nodal point of a lens and the focal plane, specified in millimeters. For example, an 8 mm lens has a focal length of 8 mm, and a 12 mm lens has a focal length of 12 mm (25 mm is approximately 1"). A shorter focal length provides a wider field of view and less depth of field.

Gray scale
A range of shades from pure white to pure black.

Gray-scale thresholds
Two adjustable values between 0 (black) and 255 (white) representing two shades of gray within a 256-level gray-scale.

The sensor judges each pixel as black or white according to where its value falls in relation to the upper threshold (highest number) and lower threshold (lowest number).

Judgment
The process the sensor uses to determine the outcome (PASS, FAIL, Fail High, or Fail Low) of the image capture by comparing the pixel count of the image to reference values.

Mask
A defined area within the ROI that is ignored during judgment.

PASS
The judgment results are acceptable based on judgment criteria as taught.

Pixel
The smallest “picture element” of an image for which the sensor determines an average brightness value. Each pixel within the sensor’s array is a discrete photosensitive cell that can collect and hold a photo charge.

Pixel array (Array)
The area on the sensor that captures the image – a 512 x 384 pixel grid.

Region of interest (ROI)
A defined area of the captured image within the pixel array that is judged. The image outside of an ROI is ignored.

56910 (presplus sensor)C0A 8/16/03 11:33 PM Page 33

Resolution
The quality of the image, expressed as the number of distinct lines per millimeter that the sensor can distinguish.

Sensor gain (Gain)
The amount of amplification of the pixel signal prior to processing by the sensor.

Trigger
An input signal to the sensor. Configurable trigger parameters determine how the sensor responds to the trigger.

56910 (presplus sensor)C0A 8/16/03 11:33 PM Page 34

Banner Engineering Corp.
9714 Tenth Avenue North
Minneapolis, MN 55441
Phone: 763.544.3164
www.bannerengineering.com
E-mail: sensors@bannerengineering.com

more sensors, more solutions

WARRANTY: Banner Engineering Corp. warrants its products to be free from defects for one year. Banner Engineering Corp. will repair or replace, free of charge, any product of its manufacture found to be defective at the time it is returned to the factory during the warranty period. This warranty does not cover damage or liability for the improper application of Banner products. This warranty is in lieu of any other warranty either expressed or implied.

Printed in U.S.A.

P/N 56910C0A