TCNM-AD Barcode Scanner

Quick Start Guide

General View



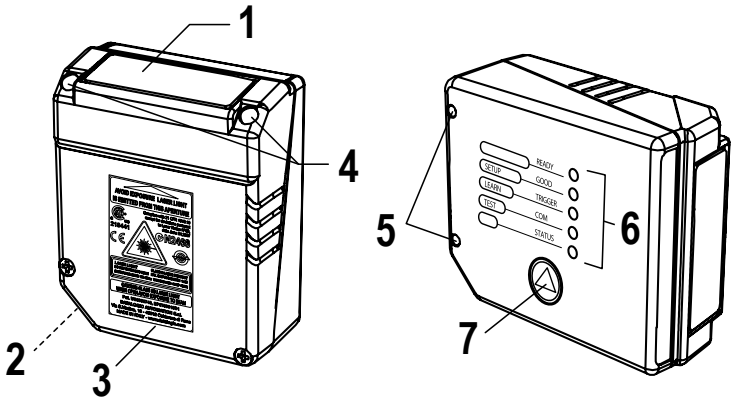

1 = Laser Beam Output Window
2 = POWER ON LED
3 = Warning and Device Class Labels
4 = Accessory Mounting Holes
5 = Mounting Holes
6 = LEDs
7 = Push Button

NOTE:

The Quick Start Guide describes stand-alone application. For other types of installations, such as ID-NET™, Pass-Through, Multiplexer Layout, etc. and for a complete scanner configuration using GeniusPlus configuration program, refer to the TCNM-AD/EX Manual.

STEP 1 – Connect the System

NOTE: This section illustrates a standalone application. For a pass-through installation, refer to the appropriate section. For complete scanner configuration using the GeniusPlus configuration program, refer to the Context-Sensitive Help On-Line.

To connect the system in a standalone configuration, you need the hardware indicated below. In this layout, the data is transmitted to the Host on the main serial interface.

- In Local Echo communication mode, data is transmitted on the RS-232 auxiliary interface independently from the main interface selection.
- When On Line Operating mode is used, the scanner is activated by an External Trigger (photoelectric sensor) when the object enters its reading zone.

P/N 175718 Rev. A

29 January 2014

ПРОМЭЛЕКТРОНИКА/ sales@prom-elec.com

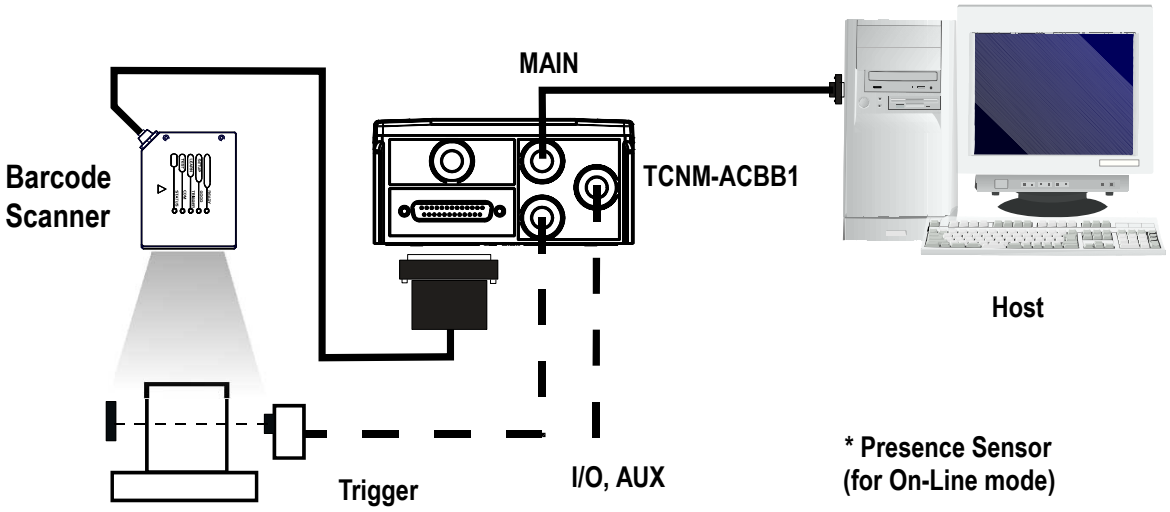

Figure 1. Barcode scanner in a standalone layout

TCNM-ACBB1 Pinout

The table below gives the pinout of the TCNM-ACBB1 terminal block connectors. Use this pinout when the barcode scanner is connected using the TCNM-ACBB1:

TCNM-ACBB1 Terminal Block Connectors			
Input Power		Outputs	
Vdc	Power Supply Input Voltage +	+V	Power Source - Outputs
GND	Power Supply Input Voltage –	–V	Power Reference - Outputs
Earth	Protection Earth Ground	O1+	Output 1 +
		O1–	Output 1 –
Inputs		O2+	Output 2 +
+V	Power Source – External Trigger	O2-	Output 2 –
I1A	External Trigger A (polarity insensitive)	Auxiliary Interface	
I1B	External Trigger B (polarity insensitive)	TX	Auxiliary Interface TX
–V	Power Reference – External Trigger	RX	Auxiliary Interface RX
+V	Power Source – Inputs	SGND	Auxiliary Interface Reference
I2A	Input 2 A (polarity insensitive)	ID-NET™	
I2B	Input 2 B (polarity insensitive)	REF	Network Reference
–V	Power Reference – Inputs	ID+	ID-NET™ network +
Shield		ID–	ID-NET™ network –
Shield	Network Cable Shield		
Main Interface			
RS232		RS485 Full-Duplex	RS485 Half-Duplex
TX		TX+	RTX+
RTS		TX–	RTX–

TCNM-ACBB1 Terminal Block Connectors		
RX	[1]RX+	
CTS	[1]RX–	
SGND	SGND	SGND

CAUTION: Do not connect GND, SGND, and REF to different (external) ground references. GND, SGND, and REF are internally connected through filtering circuitry that can be permanently damaged if subjected to voltage drops over 0.8 Vdc.

25-pin Connector Pinout

The table below gives the pinout of the 25-pin male D-sub connector for connection to the power supply and input/output signals. Use this pinout when the barcode scanner is connected using the 25-pin connector:

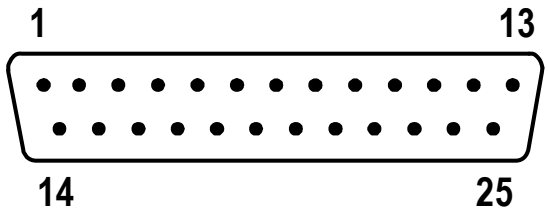

Figure 2. 25-pin male D-sub connector

25-pin D-sub male connector pinout		
Pin	Name	Function
13, 9	Vdc	Power supply input voltage +
25, 7	GND	Power supply input voltage –
1	CHASSIS	Cable shield connected to chassis
18	I1A	External Trigger A (polarity insensitive)
19	I1B	External Trigger B (polarity insensitive)
6	I2A	Input 2 A (polarity insensitive)
10	I2B	Input 2 B (polarity insensitive)
8	O1+	Output 1 +
22	O1–	Output 1 –
11	O2+	Output 2 +
12	O2–	Output 2 –
20	RX	Auxiliary RS232 RX
21	TX	Auxiliary RS232 TX
23	ID+	ID-NET™ network +
24	ID–	ID-NET™ network –
14, 15, 16, 17	NC	Not Connected

[1] Do not leave floating, see connection details.

25-pin D-sub male connector pinout				
Pin	Name	RS232	RS485 Full-Duplex	RS485 Half-Duplex
2	INTERFACE	TX	TX+	RTX+
3	(SW SELECTABLE)	RX	RX+ [2]	-
4		RTS	TX–	RTX–
5		CTS	RX– [2]	-

STEP 2 – Mounting and Positioning the System

1. To mount the barcode scanner, use the mounting bracket to obtain the most suitable position for the reader as shown in the figures below.

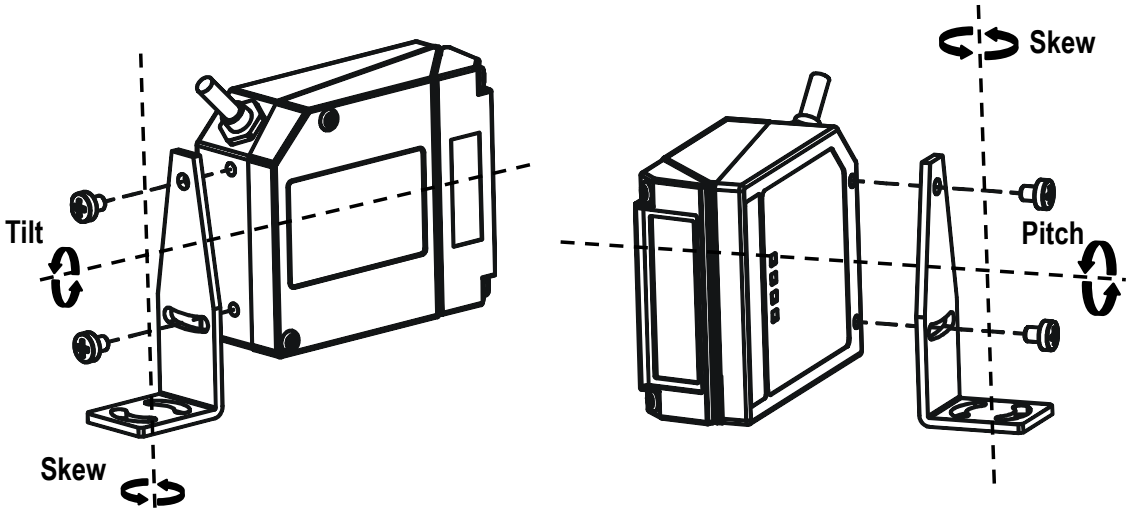

Figure 3. Positioning with mounting bracket

2. When mounting the barcode scanner, take into consideration these three ideal label position angles: Skew 10° to 30°, Tilt 0° and Pitch 0°.

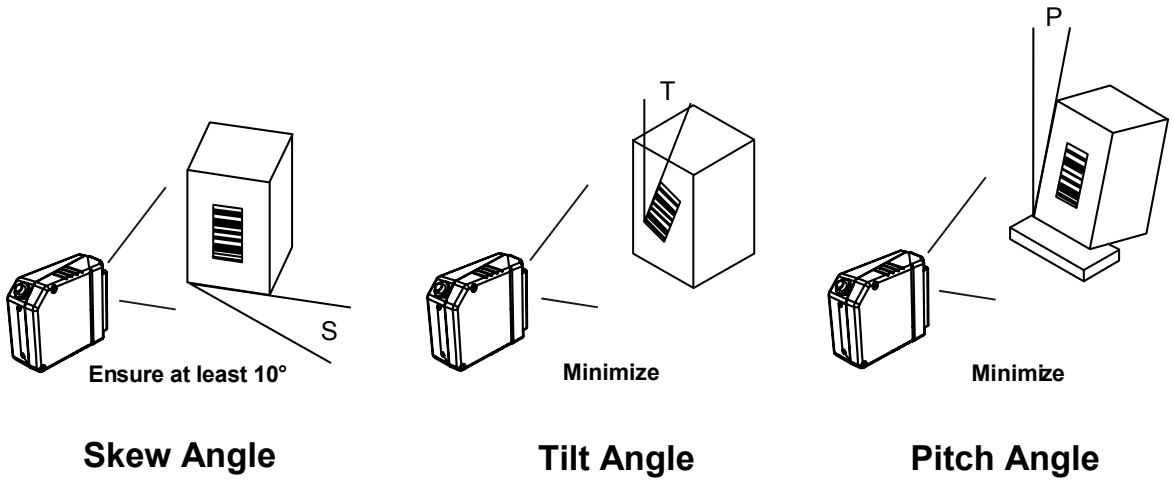

Figure 4. Skew, Tilt, and Pitch Angles

3. Refer to the Reading Diagrams to determine the distance at which your scanner should be positioned.

[2] Do not leave floating, see connection details.

STEP 3 – SMART-TEACH Configuration

SMART-TEACH is the intuitive Human Machine Interface designed to improve ease of installation and maintenance. Status and diagnostic information are presented using the five colored LEDs, and the single push button gives immediate access to the following functions:

- AutoLearn—to self-detect and auto-configure for reading unknown barcodes (by type and length)
- AutoSetup—to self-optimize and auto-configure reading performance in demanding applications
- Test Mode with bar-graph visualization—to check static reading performance

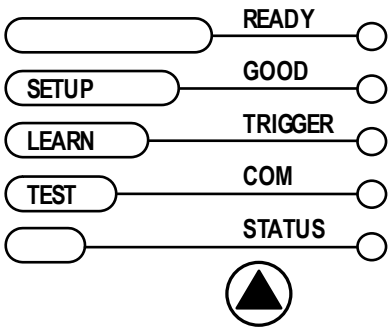

NOTE: If using the TCNM-ACM-OM110 accessory, when entering the SMART-TEACH interface, the Oscillating Mirror remains in the default fixed position (–15°) to make barcode reading easier while performing the SMART-TEACH functions.

Table 1: Indicators

Label	Color	Meaning
READY	Green	Indicates the device is ready to operate
GOOD	Green	Confirms successful reading
TRIGGER	Yellow	Indicates the status of the reading phase
COM	Yellow	Indicates active communication on main serial port
STATUS	Red	Indicates a NO READ result

During the reader startup (reset or restart phase), all the LEDs blink for one second.

On the back of the reader near the cable, the “POWER ON” LED indicates the laser scanner is correctly powered.

Auto Learn

If you are configuring your scanner using SMART-TEACH, you must start with the Auto Learn procedure.

1. Hold the SMART-TEACH push button pressed until the LEARN LED is on.

2. Release the button to enter the Auto Learn function. The reader begins to automatically detect and recognize barcodes (by type and length) that are presented to it[3]. The laser turns on and the LEARN LED blinks to indicate the ongoing process.

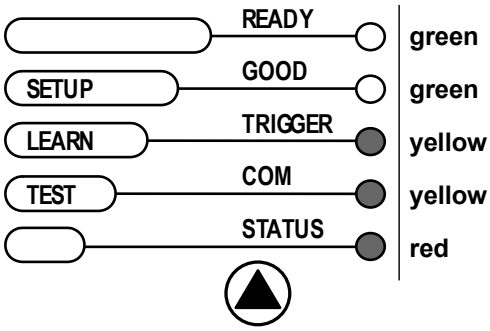

1. Place the desired barcode on the scanline.
2. Wait until the LEARN LED is steady ON (indicating the reader has detected the barcode).
3. Repeat, if needed, the above two steps to program up to 10 different barcodes (the LEARN LED returns to the blinking state for the next code). If more than one barcode is detected in the scan line, the Multi Label mode is enabled (refer to TCNM-AD/EX/SP Family Software Configuration Parameter Guide help file).

3. Exit the process by pressing the SMART-TEACH push button once. The scanner restarts at the end of the process, and then the detected barcodes are automatically configured in the scanner memory.

NOTE: If the barcode cannot be read because of low contrast or excessive ambient light, you can perform the AutoSetup function to optimize the optical parameters. Then you can perform Auto Learn to recognize the barcode symbology.

NOTE: On exit from Auto Learn, the following parameters are forced: Code Combination = Single Label, Reading Mode = Linear. If necessary, these parameters can be changed through GeniusPlus.

Auto Setup (Optional)

At the end of the Auto Learn procedure, you may follow the Auto Setup procedure to set up the reading parameters.

1. Hold the SMART-TEACH push button pressed until the SETUP LED is on.
2. Release the button to enter the Auto Setup function.
3. Once entered, if a barcode label is positioned in front of the scanline, the scanner automatically performs the optimal setup of the reading parameters for that specific barcode.

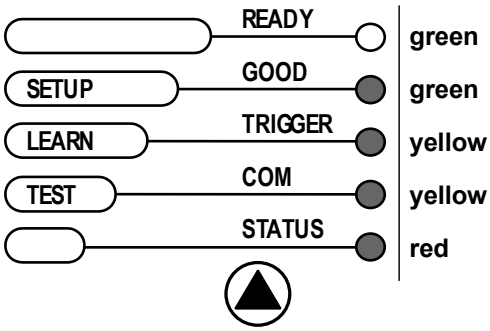

1. Place the desired barcode on the scanline.
2. Enter the Auto Setup function (the laser turns on and the SETUP LED blinks to indicate the ongoing process).
3. Wait until the SETUP LED stays steady ON (indicating the reader has detected the barcode).

This procedure ends either when the barcode is successfully decoded or after a timeout of about 7 seconds. The scanner restarts at the end of the process, and then the optimized reading parameters for that barcode are automatically configured in scanner memory.

NOTE: If your application has been configured using SMART-TEACH, go to STEP 5.

Reset Scanner to Factory Default (Optional)

To reset the scanner to the factory default values, hold down the SMART-TEACH push button while powering up the scanner. At the end of the procedure (about 5–6 seconds), the Configuration and Environmental parameters are reset, and all LEDs blink simultaneously three times.

[3] In case of Programming Barcodes, refer to the “Setup Procedure Using Programming Barcodes” document in the product CD.

STEP 4 – Installing GeniusPlus Configuration Program

GeniusPlus is a scanner configuration tool that provides several important advantages:

- Wizard approach for new users
- Multi-language version
- Defined configuration directly stored in the reader
- Communication protocol independent from the physical interface allowing to consider the reader as a remote object to be configured and monitored

To install GeniusPlus, insert the GeniusPlus CD-ROM, wait for the CD to autorun, and follow the installation procedure. The software is compatible with Windows 98, 2000/NT, XP, Vista, Windows 7, and Windows 8.

This configuration procedure assumes scanner connection to a TCNM-ACBB1. GeniusPlus, running on a laptop computer, is connected to the scanner auxiliary port through the TCNM-ACBB1 9-pin connector. To communicate with the scanner, GeniusPlus performs an auto baud rate detection starting from its default parameters, which are 115200, 8, N, 1. These parameters can also be set in the GeniusPlus Tools > Options > Communications window.

Wizard for Quick Reader Setup

After installing the GeniusPlus software program, the following window appears asking the user to choose the desired configuration level.

We advise using the Wizard option for rapid configuration or new users because it shows a step-by-step scanner configuration.

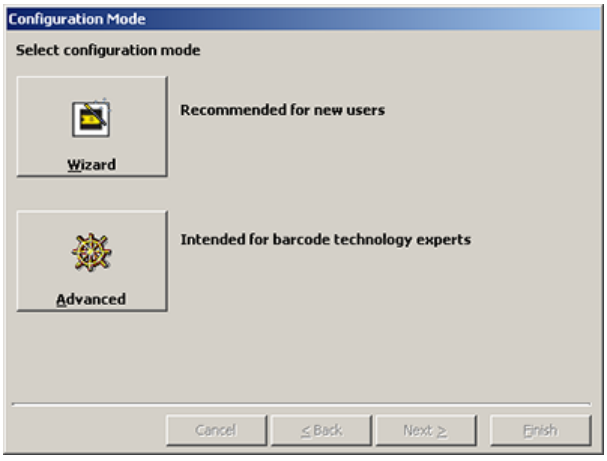

1 Click Create New to create a new configuration.

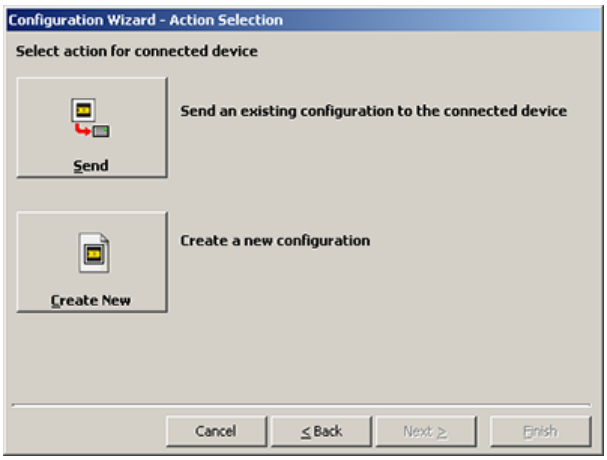

a Select a barcode and drag it into one of the slots at the bottom. Click Next to configure the selected barcode(s) on the following screen(s).

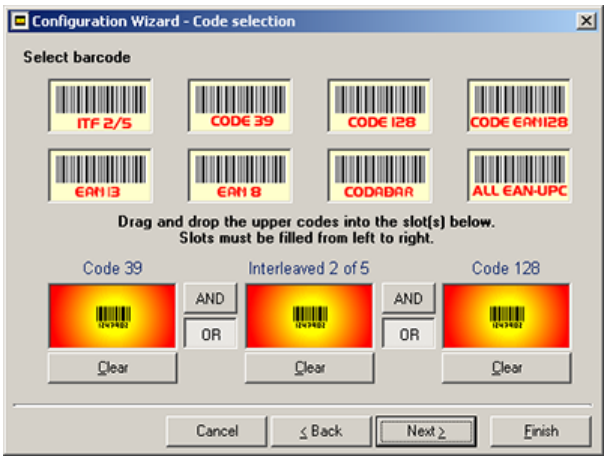

b Select Operating Mode and click Next.

On Line operating mode requires the reader to be connected to an External Trigger/Presence Sensor using I1A and I1B inputs.

Automatic operating mode does not require connection to an external Presence Sensor. When working in this mode, the reader is continuously scanning while the reading phase is activated each time a barcode enters the reader reading zone. The reader stops reading after an N number of scans without a code. Barcode characters are transmitted on the serial interface. In case of a failed reading phase, no message is sent to the host computer.

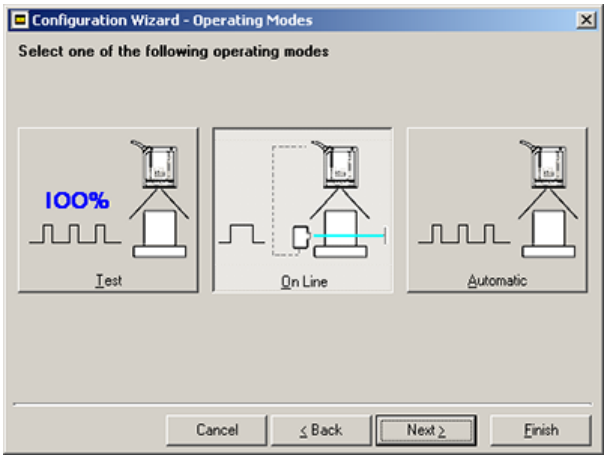

c Configure one or both digital outputs by selecting the desired Activation Event, Deactivation Event, and specifying Deactivation Timeout. Click Next.

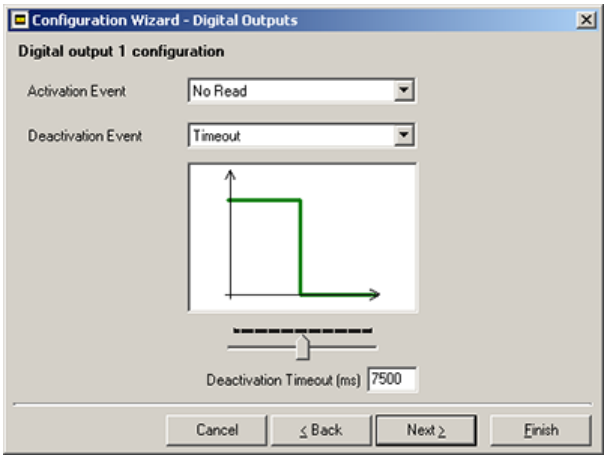

d Select Hardware Interface Type. Click Next.

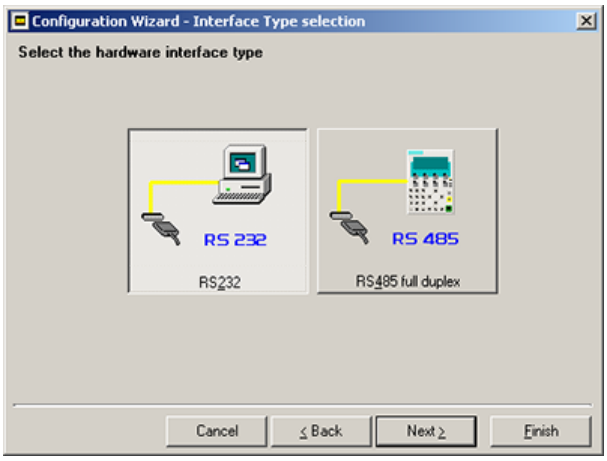

e Specify Output Data Format. Click Next.

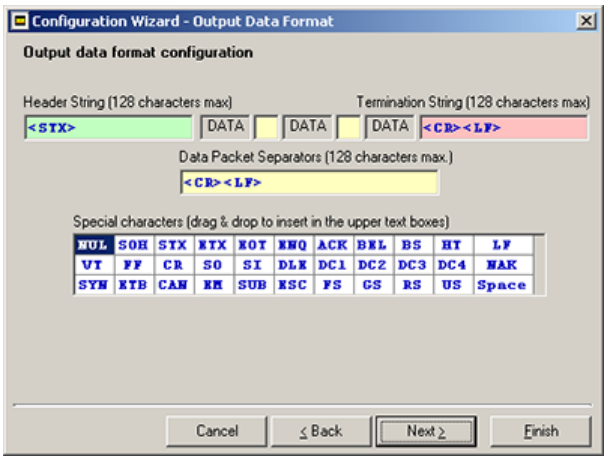

2 After defining the parameter values, the following window appears allowing you to complete the reader configuration as follows:

- Save the configuration to disk
- Switch to Advanced Mode
- Send the configuration to the scanner

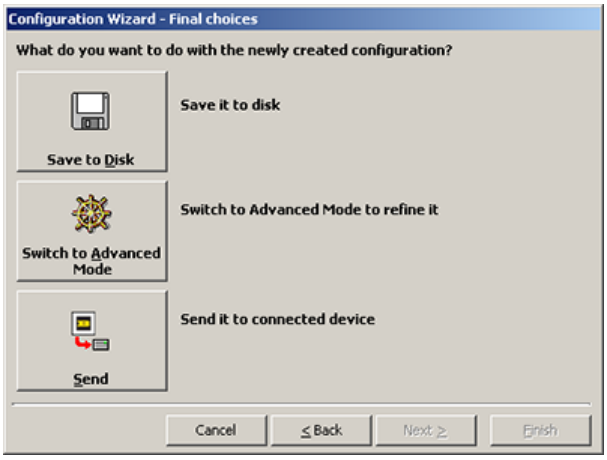

3 After sending the configuration to the scanner, click Next. You have completed the configuration process. Click Finish.

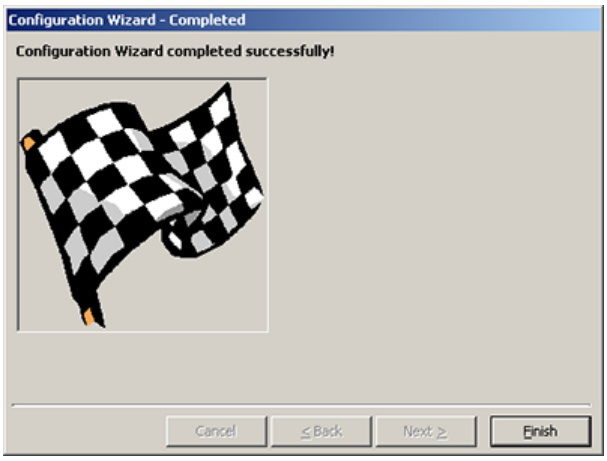

4 After clicking Finish, the System Information window displays.

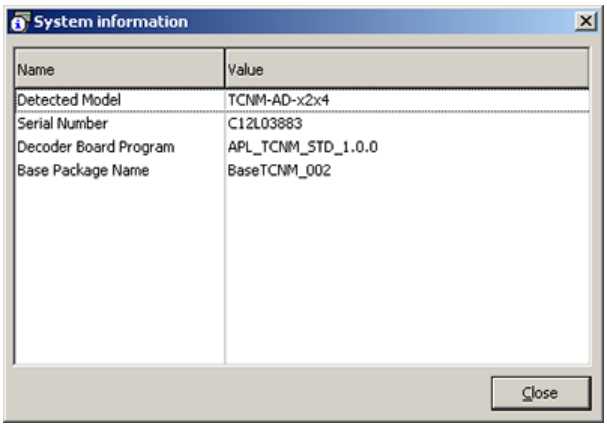

STEP 5 – Test Mode

Use a code suitable to your application to test the system.

1. To enter Test Mode, hold down the SMART-TEACH push button until the TEST LED is on.
2. Once entered, the bar graph on the five LEDs is activated and if the scanner starts reading barcodes, the bar graph shows the Good Read Rate. In case of no-read condition, only the STATUS LED is on and blinking.

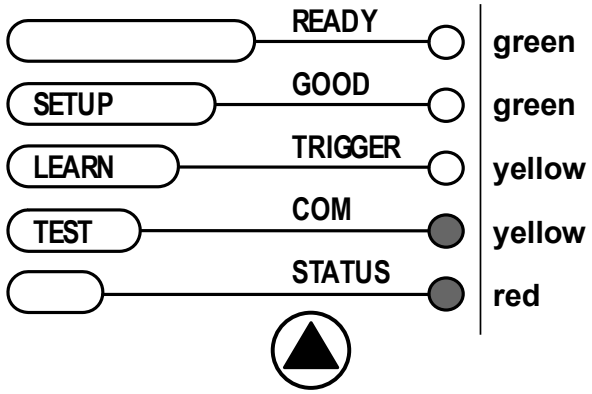

3. To exit Test Mode, press the SMART-TEACH push button once.

NOTE: By default, the barcode scanner automatically exits Test Mode after two minutes.

Advanced Scanner Configuration

The Advanced selection is available when starting the GeniusPlus application and is designed for expert users to complete a more detailed scanner configuration. By choosing this option it is possible to start a new scanner configuration or to open and modify an old one. Refer to *TCNM - AD/EX/SP Family Software Configuration Parameter Guide* for more information.

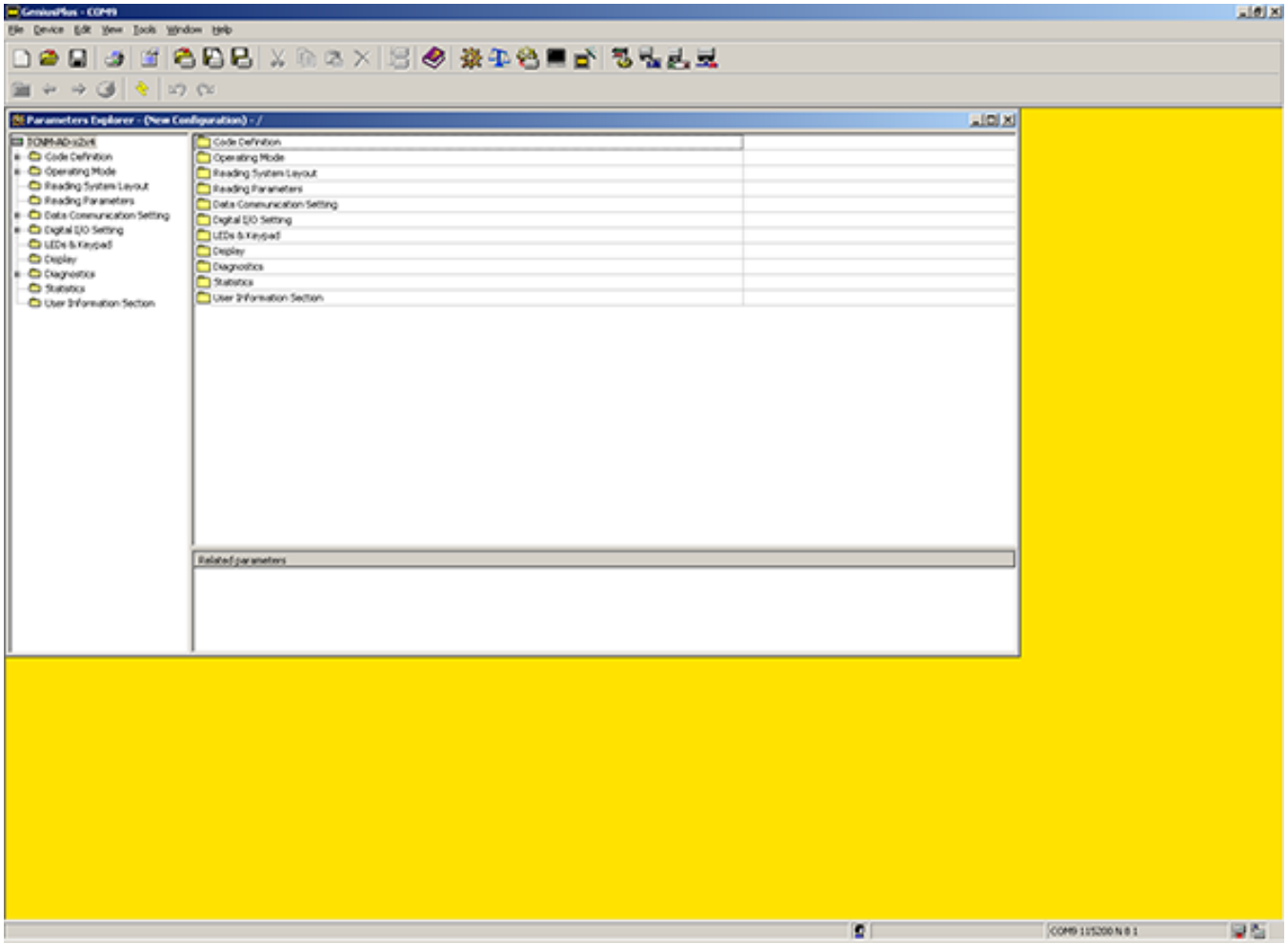

Programming and Layout Notes

Host Mode Programming. The scanner can also be configured from a host computer using the Host Mode programming procedure and commands via the serial interface. See the Host Mode Programming file on the CD.

Alternative Layouts

- The ID-NET™ network is a built-in speed interface dedicated for high-speed scanner interconnection. ID-NET is in addition to the Main and Auxiliary serial interfaces. If you need an ID-NET network, refer to the TCNM-AD/EX manual. The scanner can also be configured for alternative layouts by reading programming barcodes. See *Family Scanner Setup Procedure Using Programming Barcodes*, printable from the CD.
- If you need to install an Ethernet network, Fieldbus network, Pass-Through network, Multiplexer network, or an RS-232 Master/Slave network, refer to the TCNM-AD/EX manual.

Appendix

Reading Diagrams (TCNM-AD Models)

TCNM-AD-1200 (Standard Resolution)

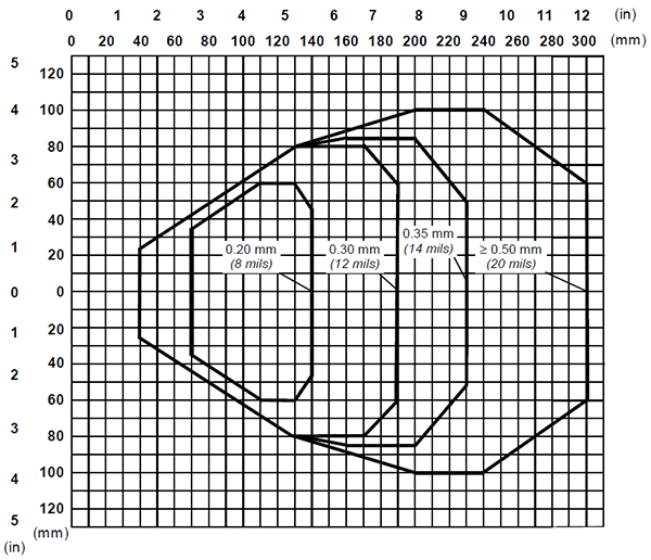

TCNM-AD-2200 (High Resolution)

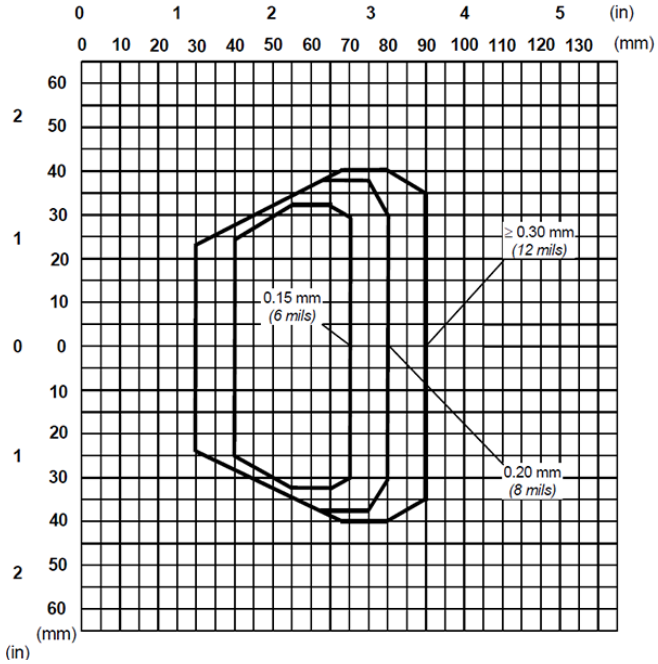

TCNM-AD-1204 (Standard Resolution)

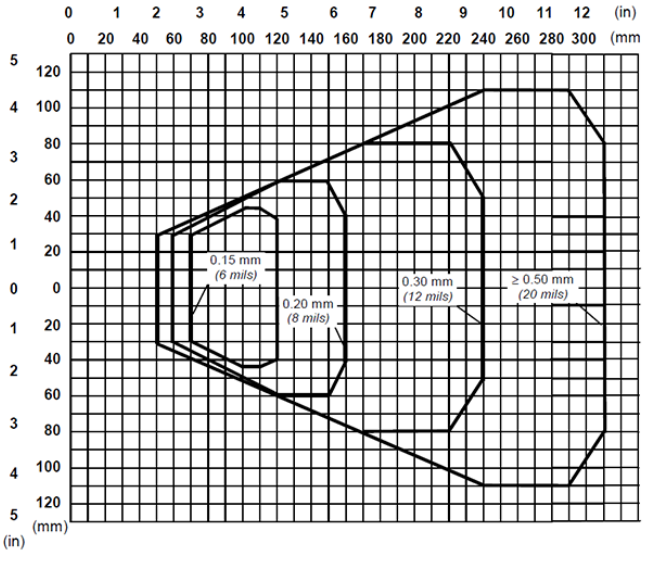

TCNM-AD-2204 (High Resolution)

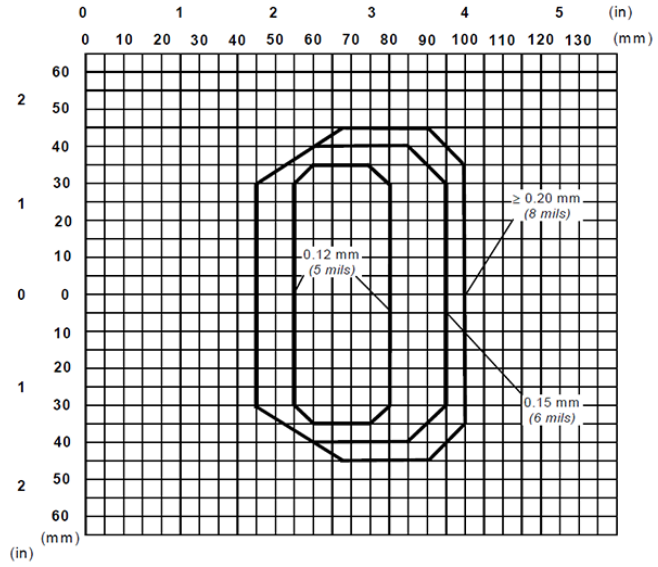

Note: (0,0) is the center of the laser beam output window.

Conditions

Optic Version = Linear
Code = Interleaved 2/5 or Code 39
PCS = 0.90
Pitch angle = 0°
Skew angle = 15°
Tilt angle = 0°
Reading Conditions[4] = Standard
Scan Speed [4] = 500 scans/sec

Reading Performance (TCNM-AD Models)

Version	Max Code Resolution (mm (mils))	Speed (scans/sec)
12X0	0.20 (8)	500 to 800
12X4	0.15 (6)	800 to 1000
22X0	0.15 (6)	500 to 800
22X4	0.12 (5)	800 to 1000

Version	Reading Distance
12X0	40 mm (1.6 in) - 300 mm (11.8 in) on 0.50 mm (20 mils) codes
12X4	50 mm (1.8 in) - 310 mm (11.8 in) on 0.50 mm (20 mils) codes
22X0	30 mm (1.2 in) - 90 mm (3.5 in) on 0.30 mm (12 mils) codes
22X4	30 mm (1.2 in) - 90 mm (3.5 in) on 0.30 mm (12 mils) codes

Refer to the diagrams given in *Reading Diagrams* for further details on the reading features. They are taken on various resolution sample codes at a 25 °C ambient temperature, depending on the conditions in the notes under the diagrams.

[4] Parameter selectable in GeniusPlus.

Specifications

Sensor

Input Power
- Supply Voltage: 10–30V dc
- Power consumption: Maximum 0.5 to 0.17 A; 5 W

Serial Interfaces
- Main Serial Interface: Sw programmable: RS232; RS485 FD and HD
- Baud rate: 1200 to 115200
- Auxiliary: RS232
- Baud rate: 1200 to 115200
- ID-NET™: RS485 Half-duplex
- Baud rate: Up to 1 MBaud

Inputs
- Input 1 (External Trigger), Input 2: Optocoupled, polarity insensitive
- Voltage: 10–30V dc
- Current Consumption: 12 mA maximum
- Minimum Pulse Duration: 5 ms

Outputs
- Output 1, Output 2: Optocoupled
- V_{CE}: 30V dc maximum
- Collector Current: 40 mA continuous maximum; 130 mA pulsed maximum
- $V_{CE\ saturation}$: 1V maximum at 10 mA
- Power Dissipation: 80 mW maximum at 45 °C (ambient temperature)

Optical Features
- Light Source: Semiconductor laser diode
- Wave Length: 630 to 680 nm
- Safety Class: Class 2 - EN 60825-1; CDRH

Reading Features[5]
- Scan Rate (software): (600 to 1000 scans/sec)
- Aperture Angle: 50°
- Maximum Reading Distance and Resolution: see *Reading Performance (TCNM-EX Models)* and *Reading Performance (TCNM-AD Models)* on page 13

Operating Conditions
- Operating Temperature[6]: 0 °C to +45 °C (+32 °F to +113 °F)
- Storage Temperature: −20 °C to +70 °C (−4 °F to +158 °F)
- Humidity: 90% (non-condensing)
- Vibration Resistance EN 60068-2-6: 14 mm at 2 to 10 Hz; 1.5 mm at 13 to 55 Hz; 2 g at 70 to 200 Hz; 2 hours on each axis
- Bump Resistance N 60068-2-29: 30g; 6 ms; 5000 shocks on each axis

Environmental Rating
- IP65
- Protection Class – EN 60529

Dimensions
- 68 x 84 x 34 mm (2.7 x 3.3 x 1.3 in)

Weight
- 330 g (11.6 oz)

LED Indicators
- Ready, Good, Trigger, Com, Status, Power On

Multi-function Key
- SMART-TEACH button

Software

Readable Codes
- EAN/UPC (including Add-on 2 and Add-on 5)[7]
- 2/5 Interleaved[7]
- ABC Codabar
- Codabar[7]
- Code 39 (Standard and Full ASCII)[7]
- Code 93[7]
- Code 128[7]
- EAN 128[7]
- GS1 DataBar[7]
- GS1 DataBar Expanded[7]
- GS1 DataBar Limited
- ISBT 128
- Pharmacode
- Plessey

Code Selection
- Up to ten different symbologies during one reading phase

Decoding Safety
- Can enable multiple good reads of same code

Headers and Terminators
- Up to 128-byte header string
- Up to 128-byte terminator string

Operating Modes
- On Line, Serial On Line, Verifier, Automatic, Continuous, Test

Configuration Modes
- SMART-TEACH Functions
- GeniusPlus utility program
- GeniusPlus based Host Mode Programming

Special Functions
- Code Verifier
- Advanced Code Reconstruction
- Motor Off and SW_Speed Control
- Programmable Diagnostic and Statistic Messages

Parameter Storage
- Non-volatile internal Flash

5 Further details given in the Reader Performance tables.
6 If the reader is used in high temperature environments (over 40° C), use of the Beam Shutter is advised (see the GeniusPlus configuration program) and/or a thermally conductive support (such as the metal bracket provided).

Mechanical Installation

The barcode scanner can be installed to operate in different positions. The four screw holes (M4 x 5) on the body of the reader are for mechanical fixture. The diagrams below give the overall dimensions of the scanner and mounting bracket and may be used for installation.

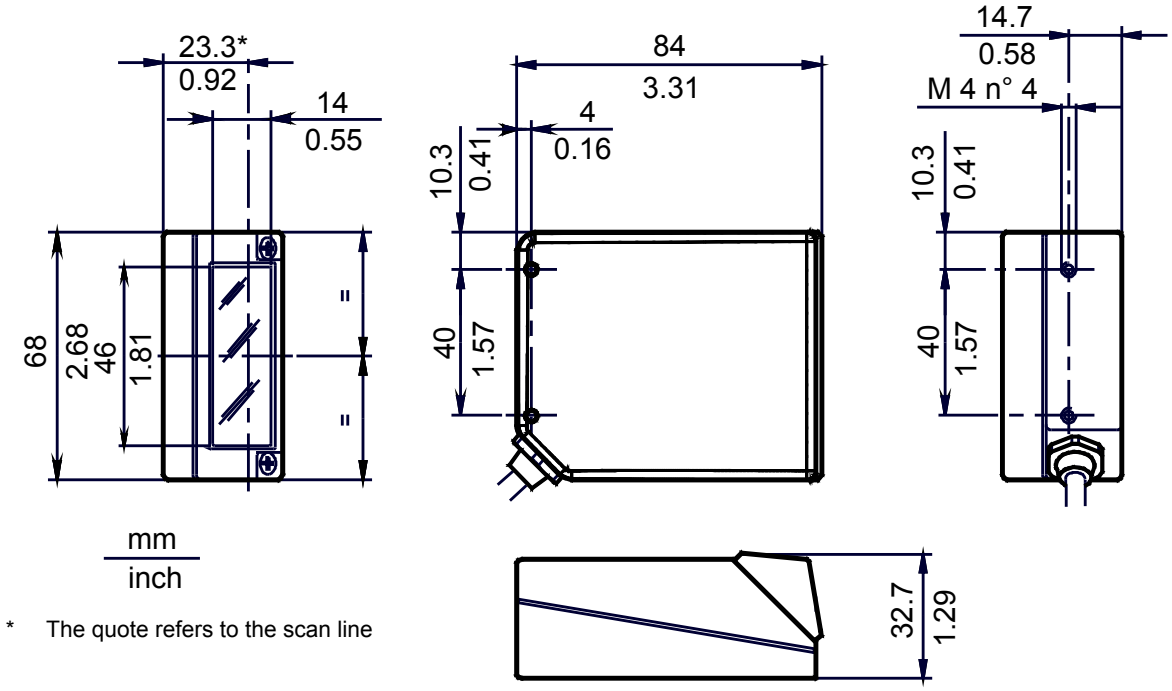

Figure 5. Overall Dimensions

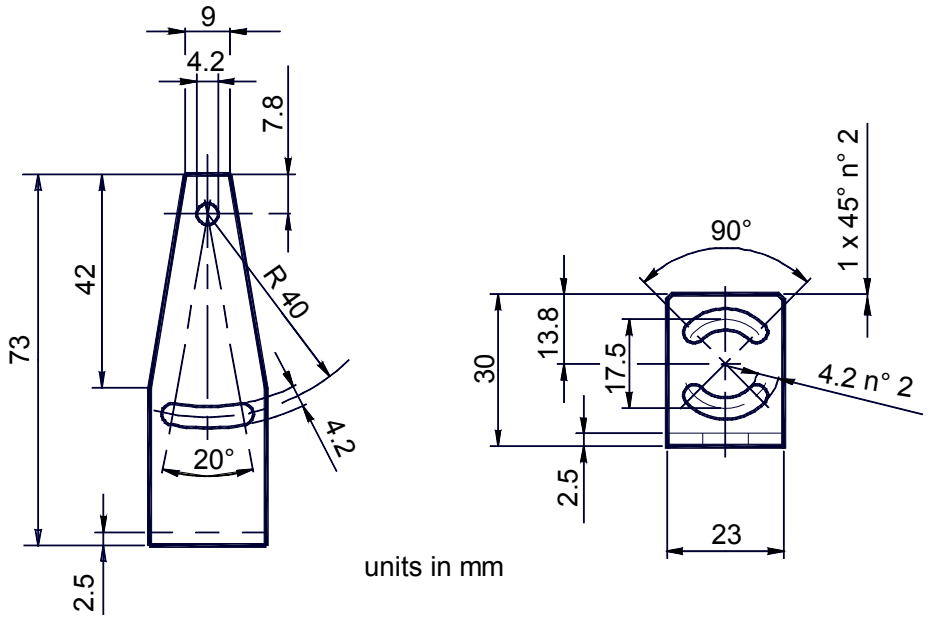

Figure 6. Mounting Bracket Overall Dimensions

[7] ACR Readable.

Safety and Compliance Notices



WARNING: Not To Be Used for Personnel Protection

Never use this device as a sensing device for personnel protection. Doing so could lead to serious injury or death. This device does not include the self-checking redundant circuitry necessary to allow its use in personnel safety applications. A sensor failure or malfunction can cause either an energized or de-energized sensor output condition.

Laser Safety

The following information is provided to comply with the rules imposed by international authorities and refers to the correct use of the TCNM-AD/EX family of scanners.

Standard Regulations

This scanner uses a low-power laser diode. Although staring directly at the laser beam momentarily causes no known biological damage, avoid staring at the beam as one would with any very strong light source, such as the sun. Avoid allowing the laser beam to hit the eye of an observer, even through reflective surfaces such as mirrors, etc.

This product conforms to the applicable requirements of IEC 60825-1 and complies with 21 CFR 1040.10 except for deviations pursuant to Laser Notice N° 50, date June 24, 2007. The scanner is classified as a Class 2 laser product according to IEC 60825-1 regulations.

There is a safety device, which allows the laser to be switched on only if the motor is rotating above the threshold for its correct scanning speed.

The laser beam can be switched off through a software command (see also the GeniusPlus Help On Line).



WARNING:

Use of controls or adjustments or performance of procedures other than those specified herein may result in exposure to hazardous visible laser light.

The laser light is visible to the human eye and is emitted from the window on the front of the scanner. Warning labels indicating exposure to laser light and the device classification are applied onto the body of the scanner.

Disconnect the power supply when opening the device during maintenance or installation to avoid exposure to hazardous laser light.

The laser diode used in this device is classified as a class 3B laser product according to EN 60825-1 regulations and as a Class IIIb laser product according to CDRH regulations.

Any violation of the optic parts in particular can cause radiation up to the maximum level of the laser diode (35 mW at 630 to 680 nm).

FCC Compliance

Modifications or changes to this equipment without the expressed written approval of Banner Engineering Corp could void the authority to use the equipment.

This device complies with PART 15 of the FCC Rules. Operation is subject to the following two conditions: (1) This device may not cause harmful interference, and (2) this device must accept any interference received, including interference which may cause undesired operation.

This equipment has been tested and found to comply with the limits for a Class A digital device, pursuant to part 15 of the FCC Rules. These limits are designed to provide reasonable protection against harmful interference when the equipment is operated in a commercial environment. This equipment generates, uses, and can radiate radio frequency energy and, if not installed and used in accordance with the instruction manual, may cause harmful interference to radio communications. Operation of this equipment in a residential area is likely to cause harmful interference in which case the user will be required to correct the interference at his own expense.

Power Supply

This product is intended to be installed by Qualified Personnel only.

This accessory device is intended to be supplied by a UL Listed or CSA Certified Power Unit with «Class 2» or LPS power source, which supplies power directly to the scanner via the 25-pin connector.

CE Compliance



WARNING:

This is a Class A product. In a domestic environment this product may cause radio interference in which case the user may be required to take adequate measures.

Handling

The TCNM-AD is designed to be used in an industrial environment and is built to withstand vibration and shock when correctly installed. However, it is also a precision product and it must be handled correctly before and during installation to avoid damage.

- Avoid that the scanners hit one another causing damage. They should be handled separately.
- Avoid that the scanners are dropped (exceeding shock limits).
- Do not fine tune the positioning by striking the scanner or bracket.
- Do not weld the scanner into position; this can cause electrostatic, heat, or output window damage.
- Do not spray paint near the scanner; this can cause output window damage.