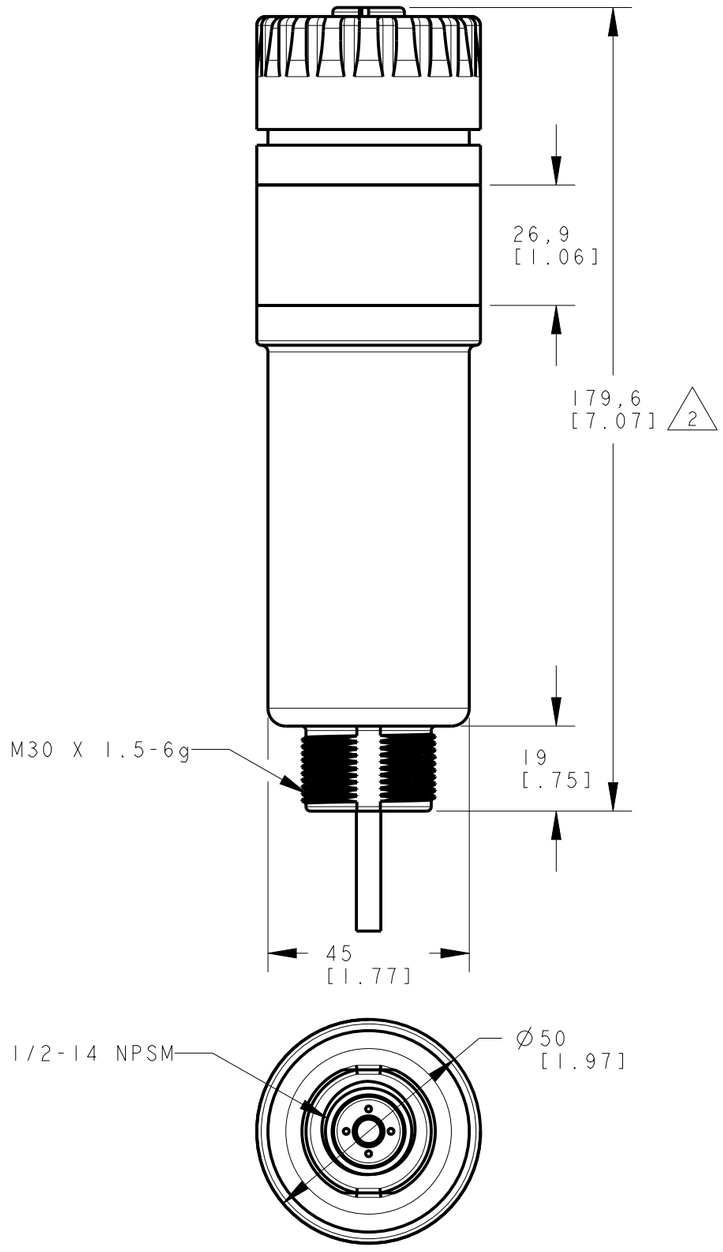

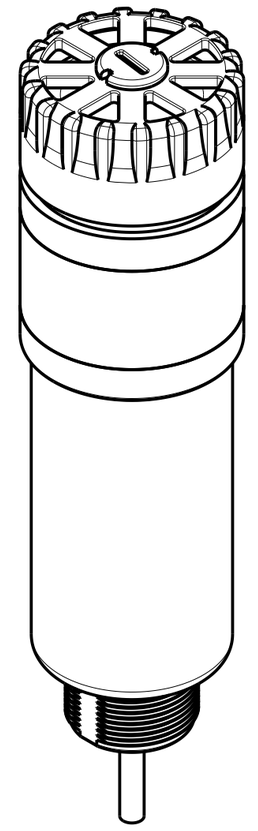

ISOMETRIC VIEW
SCALE 3:4

NOTES:
1. ALL DIMENSIONS ARE MILLIMETERS [INCHES] UNLESS OTHERWISE NOTED.
2. REFER TO "www.bannerengineer.com" FOR ADDITIONAL DATA AND SPECIFICATIONS.
2 HEIGHT WITH TOP UNSCREWED APPROXIMATELY 3.5mm TO ALLOW SOUND TO ESCAPE.

This drawing is the property of BANNER ENGINEERING CORP. Any use or reproduction, in any form, without prior written permission of Banner is prohibited.
© 2015 Banner Engineering Corp.

THIRD ANGLE PROJECTION

BANNER ENGINEERING CORP.
www.bannerengineering.com

TITLE

TL50 AC 1-STACK CABLE AUDIBLE

SIZE	DRAWING NO.	REV.
B	168247	
SCALE 3:4	SHEET 1 OF 1	

CREO

ПРОМЭЛЕКТРОНИКА/ sales@prom-elec.com