SPS101 DC Sensor Power Supply

Datasheet

For Powering Banner DC Sensors

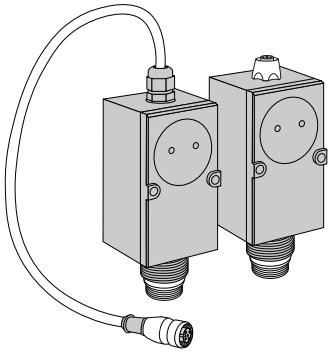

- Converts 120 V AC line voltage to low voltage DC for powering any Banner DC sensor [1] which has either a 4- or 5-pin M12 quick-disconnect (QD)
- **SPS101 models:** 5 amp-rated SPST relay for switching AC loads or large DC loads
- **SPS101S models:** Optically-isolated SPST solid-state output for switching AC or DC loads
- Quick-disconnect models (Q suffix) require a sensor with a cabled quick-disconnect connector
- Cabled models (QP suffix) can connect to a sensor with either an integral or a cabled quick-disconnect connector
- Isolated DC output

WARNING:
- **Do not use this device for personnel protection**
- Using this device for personnel protection could result in serious injury or death.
- This device does not include the self-checking redundant circuitry necessary to allow its use in personnel safety applications. A device failure or malfunction can cause either an energized (on) or de-energized (off) output condition.

Models

Model	Supply Voltage	Sensor Connection	Supply/Output Cable	Output Type
SPS101Q	105 V AC to 130 V AC, 60 Hz	Integral 5-pin M12 female quick-disconnect connector [2]	Integral 5-pin 7/8 in-16UNF male quick-disconnect connector	Form A (SPST) electromechanical relay (see Specifications on page 2 for rating information)
SPS101QP		500 mm (19.7 in) shielded PVC cable with a 5-pin M12 female quick-disconnect connector		
SPS101SQ		Integral 5-pin M12 female quick-disconnect connector [2]		SPST optically-isolated solid-state switch (see Specifications on page 2 for rating information)
SPS101SQP		500 mm (19.7 in) shielded PVC cable with a 5-pin M12 female quick-disconnect connector		

Wiring

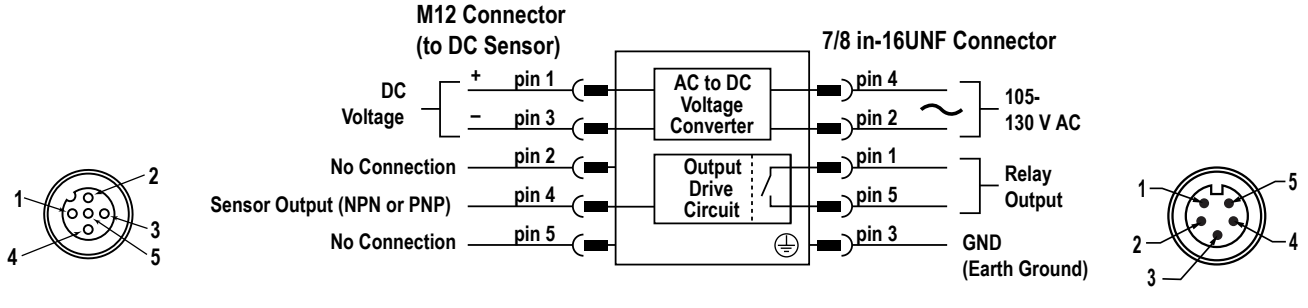

[1] SPS power supplies are not for use with NAMUR sensors or personal safety products.
[2] Requires a 4- or 5-pin cabled M12 quick-disconnect connector on the sensor.

Original Document
66959 Rev. C

28 September 2022

66959

ПРОМЭЛЕКТРОНИКА/ sales@prom-elec.com

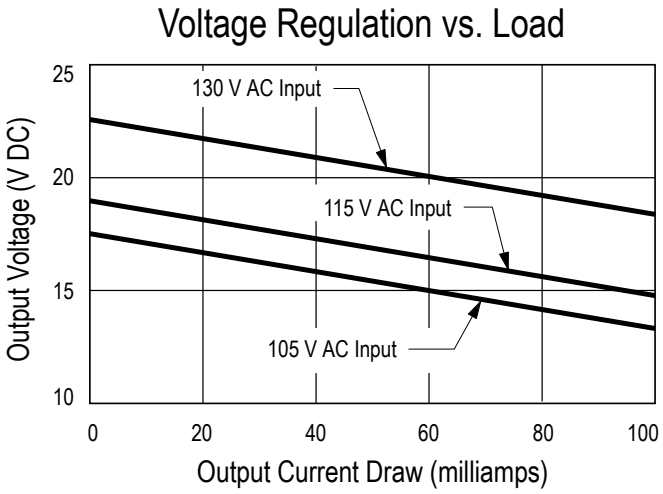

Specifications

Supply Voltage
105 V AC to 130 V AC, 60 Hz

Output Power
120 mA maximum: 12 V DC minimum, 30 V DC maximum (dependent on load)

Output Configuration
SPS101Q(P) models: Form A (SPST) electromechanical relay
SPS101SQ(P) models: Optically-isolated SPST solid-state switch

Output Rating
SPS101Q(P) models:
- Maximum switching power (resistive load): 150 W, 600 VA
- Maximum switching voltage (resistive load): 250 V AC or 30 V DC (120 V AC maximum per UL and CSA)
- Maximum switching current (resistive load): 5 A
- Minimum voltage and current: 1 A at 5 V DC, 0.1 A at 24 V DC
- Peak switching voltage: 750 V AC (transient suppression recommended)
- Mechanical life of relay: 10,000,000 operations

SPS101SQ(P) models:
- Maximum switching voltage: 250 V AC or 250 V DC
- Maximum switching current: 300 mA
- On-state saturation voltage: Less than 3 V at 300 mA; less than 2 V at 15 mA
- Off-state leakage current: Less than 50 µA
- Inrush current: 1 A for 20 milliseconds, non-repetitive

Important: The output of solid-state models is not short-circuit protected. Exercise care when making wiring connections.

Status Indicators
Power On: Green
Output On: Red

Connections
Power connector: Integral 5-pin 7/8 in-16UNF male quick-disconnect connector
Sensor connector: Integral 5-pin M12 female quick-disconnect connector, or 500 mm (19.7 in) shielded PVC cable with a 5-pin M12 female quick-disconnect connector, depending on model

Environmental Rating
IP54

Operating Conditions
Temperature: –20 °C to +50 °C (–4 °F to +122 °F)
Maximum relative humidity: 90% at +50 °C maximum relative humidity (non-condensing)

Additional Notes
Compatible with Banner DC sensors with NPN or PNP output, equipped with 4- or 5-pin M12 quick-disconnect(except NAMUR sensors). Minimum of 630 V isolation from earth ground to DC output of circuit.

Dimensions

All measurements are listed in millimeters [inches], unless noted otherwise.

Quick-Disconnect Models

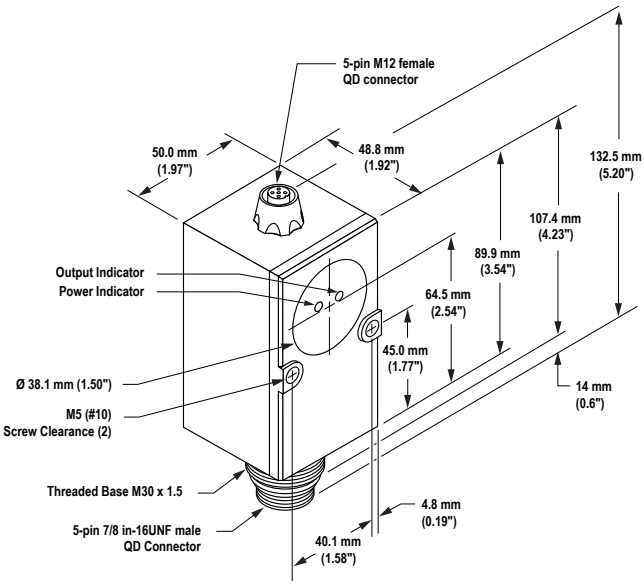

Cabled Models

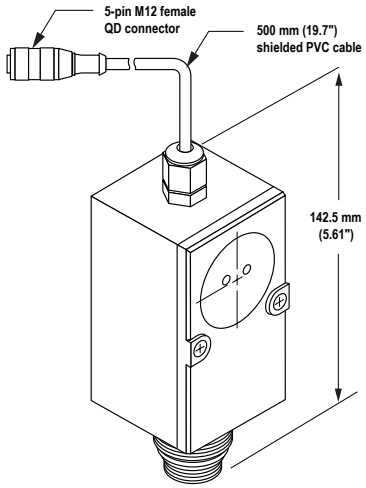

Cordsets

5-Pin 7/8-in Cordsets—Single Ended				
Model	**Length**	**Style**	**Dimensions**	**Pinout (Female)**
MBCC-506	1.83 m (6 ft)	Straight	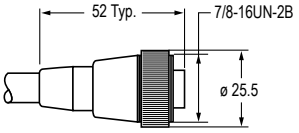	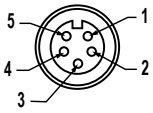
MBCC-512	3.66 m (12 ft)			
MBCC-530	9.14 m (30 ft)			

1 = Black
2 = Blue
3 = Yellow
4 = Brown
5 = White

Banner Engineering Corp Limited Warranty

Banner Engineering Corp. warrants its products to be free from defects in material and workmanship for one year following the date of shipment. Banner Engineering Corp. will repair or replace, free of charge, any product of its manufacture which, at the time it is returned to the factory, is found to have been defective during the warranty period. This warranty does not cover damage or liability for misuse, abuse, or the improper application or installation of the Banner product.

THIS LIMITED WARRANTY IS EXCLUSIVE AND IN LIEU OF ALL OTHER WARRANTIES WHETHER EXPRESS OR IMPLIED (INCLUDING, WITHOUT LIMITATION, ANY WARRANTY OF MERCHANTABILITY OR FITNESS FOR A PARTICULAR PURPOSE), AND WHETHER ARISING UNDER COURSE OF PERFORMANCE, COURSE OF DEALING OR TRADE USAGE.

This Warranty is exclusive and limited to repair or, at the discretion of Banner Engineering Corp., replacement. **IN NO EVENT SHALL BANNER ENGINEERING CORP. BE LIABLE TO BUYER OR ANY OTHER PERSON OR ENTITY FOR ANY EXTRA COSTS, EXPENSES, LOSSES, LOSS OF PROFITS, OR ANY INCIDENTAL, CONSEQUENTIAL OR SPECIAL DAMAGES RESULTING FROM ANY PRODUCT DEFECT OR FROM THE USE OR INABILITY TO USE THE PRODUCT, WHETHER ARISING IN CONTRACT OR WARRANTY, STATUTE, TORT, STRICT LIABILITY, NEGLIGENCE, OR OTHERWISE.**

Banner Engineering Corp. reserves the right to change, modify or improve the design of the product without assuming any obligations or liabilities relating to any product previously manufactured by Banner Engineering Corp. Any misuse, abuse, or improper application or installation of this product or use of the product for personal protection applications when the product is identified as not intended for such purposes will void the product warranty. Any modifications to this product without prior express approval by Banner Engineering Corp will void the product warranties. All specifications published in this document are subject to change; Banner reserves the right to modify product specifications or update documentation at any time. Specifications and product information in English supersede that which is provided in any other language. For the most recent version of any documentation, refer to: www.bannerengineering.com.

For patent information, see www.bannerengineering.com/patents.

© Banner Engineering Corp. All rights reserved