# MINI-ARRAY Two-Piece Measuring Light Curtain (3/4in) Product Manual

Original Instructions
p/n: 117167 Rev E
27-Apr-26
© Banner Engineering Corp. All rights reserved. www.bannerengineering.com

ПРОМЭЛЕКТРОНИКА/ sales@prom-elec.com

# Contents

**Chapter 1 Features ..... 3**
Models ..... 3

**Chapter 2 System Overview ..... 5**
System Features ..... 5
Easy-to-Understand Diagnostic LEDs ..... 6
Two Solid-State Outputs ..... 7
EIA-485 Interface ..... 7
Sensing Scan Time ..... 7
Supplied System Software ..... 7
Vehicle Detection Applications (Output #1) ..... 7
Trailer Hitch Detection Applications (Output #1) ..... 8
System Self-Diagnostics ..... 8
Marginal Alignment/Dirty Lens Detection ..... 8
Fault Detection and Sensor Degradation Operation ..... 8

**Chapter 3 Installation ..... 9**
Emitter and Receiver Mounting ..... 9
Center Bracket Mounting ..... 10
Emitter and Receiver Wiring ..... 12
Optically Align the Components ..... 13

**Chapter 4 Serial Communication ..... 14**
Serial Communication Data Format ..... 14
Request Sensor to Scan Command (Command 0×53) ..... 14
Request Sensor to Transmit all Receiver Channel State (Command 0×64) ..... 15
Request Sensor to Transmit System Status Information (Command 0×66) ..... 15
Request Sensor to Transmit One or Two Measurement Values (Command 0×67) ..... 16

**Chapter 5 Specifications ..... 17**
Emitter and Receiver Mounting Dimensions ..... 18
Emitter and Receiver Mounting Bracket Dimensions ..... 19

**Chapter 6 Troubleshooting ..... 20**

**Chapter 7 Accessories ..... 21**
Cordsets ..... 21
Anti-Vibration Mounting Kits ..... 21
Center Mounting Bracket Kit ..... 21

**Chapter 8 Product Support and Maintenance ..... 22**
Contact Us ..... 22
Banner Engineering Corp Limited Warranty ..... 22

© Banner Engineering Corp. All rights reserved. www.bannerengineering.com

Chapter Contents

Models ..... 3

# Chapter 1 Features

A-GAGE MINI-ARRAY Two-Piece Measuring Light Screen configured for vehicle separation with two discrete outputs with EIA-485 communication

- Simple two-piece measuring light screen for inspection, profiling, and object detection, tailored for vehicle separation applications
- Detects single-fault emitter, receiver and dirty lens conditions; continues to function in single-fault conditions
- Diagnostic LEDs provide a simple means of monitoring sensor performance
- The sensor algorithm ignores objects up to 125 mm (5 inch) while detecting automobile trailer hitch profiles as small as 25 mm (1 inch)
- Models available with array lengths from 150 mm to 1830 mm in 150 mm increments (6 inches to 6 feet in 6 inch increments)
- Beam spacing 19.1 mm (3/4 inch)
- Two discrete outputs plus EIA-485 serial communication
- The system is configurable via the EIA-485 serial interface and the Banner Sensors GUI software
- Alarm output signals dirty lens and system fault conditions
- EIA-485 serial communication enables a computer to process scan data and system status

**WARNING:**

- **Do not use this device for personnel protection**
- Using this device for personnel protection could result in serious injury or death.
- This device does not include the self-checking redundant circuitry necessary to allow its use in personnel safety applications. A device failure or malfunction can cause either an energized (on) or de-energized (off) output condition.

## Models

| Emitter/Receiver Models | Array Length (Y) | Housing Length (L1) | Distance Between Bracket Holes | | Total Beams | Sensor Scan Time [1] | |
|---|---|---|---|---|---|---|---|
| | | | L2 | L3 | | Interlaced Scan [2] | Straight Scan |
| **MAE616Q Emitter MAR616NX485Q Receiver** | 143 mm (5.6 in) | 231 mm (9.1 in) | 262 mm (10.3 in) | 205 mm (8.1 in) | 8 | 1.4 ms | 0.9 ms |
| **MAE1216Q Emitter MAR1216NX485Q Receiver** | 295 mm (11.62 in) | 384 mm (15.1 in) | 414 mm (16.3 in) | 357 mm (14.1 in) | 16 | 2.5 ms | 1.5 ms |
| **MAE1816Q Emitter MAR1816NX485Q Receiver** | 448 mm (17.62 in) | 536 mm (21.1 in) | 567 mm (22.3 in) | 510 mm (20.1 in) | 24 | 3.6 ms | 2.0 ms |
| **MAE2416Q Emitter MAR2416NX485Q Receiver** | 600 mm (23.62 in) | 689 mm (27.1 in) | 719 mm (28.3 in) | 662 mm (26.1 in) | 32 | 4.8 ms | 2.6 ms |
| **MAE3016Q Emitter MAR3016NX485Q Receiver** | 752 mm (29.62 in) | 841 mm (33.1 in) | 871 mm (34.3 in) | 815 mm (32.1 in) | 40 | 5.9 ms | 3.2 ms |
| **MAE3616Q Emitter MAR3616NX485Q Receiver** | 905 mm (35.62 in) | 993 mm (39.1 in) | 1024 mm (40.3 in) | 967 mm (38.1 in) | 48 | 7.0 ms | 3.7 ms |
| **MAE4216Q Emitter MAR4216NX485Q Receiver** | 1057 mm (41.62 in) | 1146 mm (45.1 in) | 1176 mm (46.3 in) | 1119 mm (44.1 in) | 56 | 8.1 ms | 4.3 ms |

Continued on page 4

[1] Worst-case response time is twice the scan time.
[2] Scan time for Vehicle Separation scanning configuration.


© Banner Engineering Corp. All rights reserved.
www.bannerengineering.com

Continued from page 3

| Emitter/Receiver Models | Array Length (Y) | Housing Length (L1) | Distance Between Bracket Holes | | Total Beams | Sensor Scan Time | |
|---|---|---|---|---|---|---|---|
| | | | L2 | L3 | | Interlaced Scan | Straight Scan |
| **MAE4816Q Emitter MAR4816NX485Q Receiver** | 1210 mm (47.62 in) | 1298 mm (51.1 in) | 1329 mm (52.3 in) | 1272 mm (50.1 in) | 64 | 9.2 ms | 4.8 ms |
| **MAE6016Q Emitter MAR6016NX485Q Receiver** | 1514 mm (59.62 in) | 1603 mm (63.1 in) | 1633 mm (64.3 in) | 1577 mm (62.1 in) | 80 | 11.5 ms | 6.0 ms |
| **MAE7216Q Emitter MAR7216NX485Q Receiver** | 1819 mm (71.62 in) | 1908 mm (75.1 in) | 1938 mm (76.3 in) | 1881 mm (74.1 in) | 96 | 13.7 ms | 7.1 ms |

The following models are no longer available for order but are still covered by the information in this document.

*Inactive models*

| Emitter/Receiver Models | Array Length (Y) | Housing Length (L1) | Distance Between Bracket Holes | | Total Beams | Sensor Scan Time | |
|---|---|---|---|---|---|---|---|
| | | | L2 | L3 | | Interlaced Scan | Straight Scan |
| **MAE5416Q Emitter MAR5416NX485Q Receiver** | 1362 mm (53.62 in) | 1451 mm (57.1 in) | 1481 mm (58.3 in) | 1424 mm (56.1 in) | 72 | 10.4 ms | 5.4 ms |
| **MAE6616Q Emitter MAR6616NX485Q Receiver** | 1667 mm (65.62 in) | 1755 mm (69.1 in) | 1786 mm (70.3 in) | 1729 mm (68.1 in) | 88 | 12.6 ms | 6.5 ms |


© Banner Engineering Corp. All rights reserved.

Chapter Contents

System Features ..... 5
Easy-to-Understand Diagnostic LEDs ..... 6
Two Solid-State Outputs ..... 7
EIA-485 Interface ..... 7
Sensing Scan Time ..... 7
Supplied System Software ..... 7
Vehicle Detection Applications (Output #1) ..... 7
Trailer Hitch Detection Applications (Output #1) ..... 8
System Self-Diagnostics ..... 8
Marginal Alignment/Dirty Lens Detection ..... 8
Fault Detection and Sensor Degradation Operation ..... 8

# Chapter 2 System Overview

The Banner A-GAGE MINI-ARRAY Two-Piece Measuring Light Screen was customized for vehicle separation applications. It incorporates the popular MINI-ARRAY emitter and receiver design and ease of use, while simplifying installation. This two-piece system does not require a separate controller.

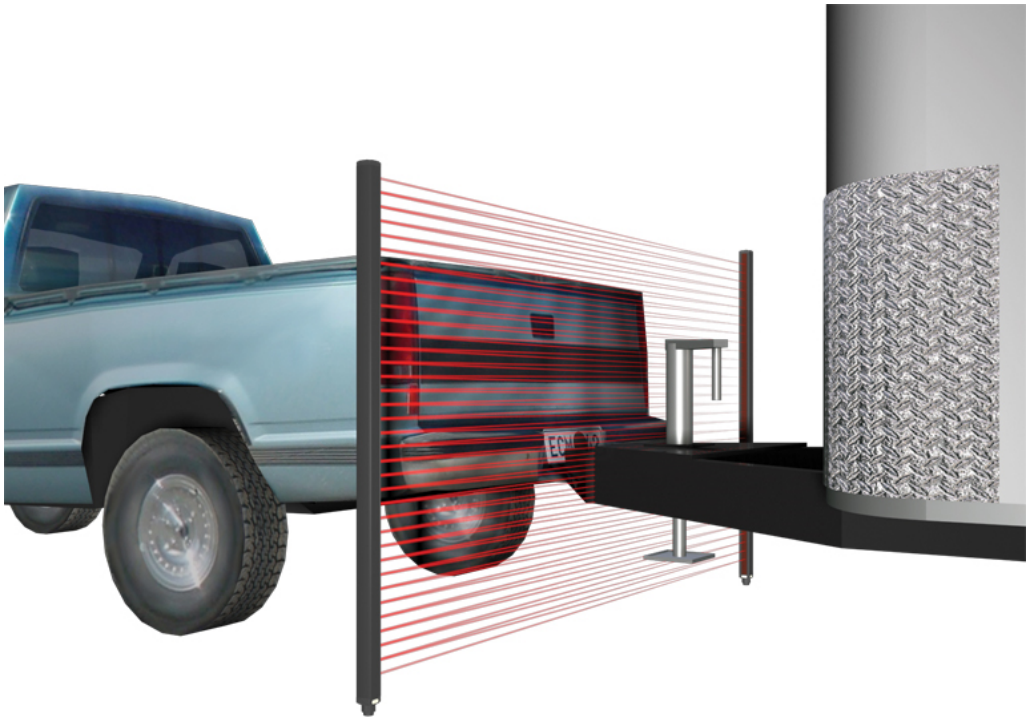

A typical system consists of four components:

- Emitter
- Receiver
- Two interconnecting cables

Models are available in array lengths from 150 mm to 1830 mm in 150 mm increments (6 inch to 6 feet in 6 inch increments). Beam spacing is 19.1 mm (3/4 inch). Sensing range is 16.5 m (55 feet).

## System Features

Built-in features simplify the operation of the MINI-ARRAY Two-Piece Light Screen system, which is customized to specifically address the demanding requirements needed to reliably detect vehicle separation. Large optical lenses provide strong optical excess gain, needed for demanding outdoor environments.


© Banner Engineering Corp. All rights reserved.

The system is pre-configured for an interlaced optical pattern, which provides the minimum object detection necessary to detect a trailer hitch. A sensor scan involves individually enabling each emitter channel twice. In effect, each emitter channel fires at both its opposing receiver element, and at the one beneath it. The result is an interlaced optical detection pattern, as shown. This pattern can better detect objects within the middle third of the sensing area.

Along with using the interlaced pattern, the sensor processes the scan data in a method that is tailored for vehicle separation applications: both for initial car detection and trailer detection. Several important features have been built into the MINI-ARRAY Two-Piece system:

- Easy-to-understand diagnostic LEDs
- Two discrete outputs
- EIA-485 serial communication
- Self-diagnostics to detect dirty lens and faulty or degraded sensor operation conditions

*System Features*

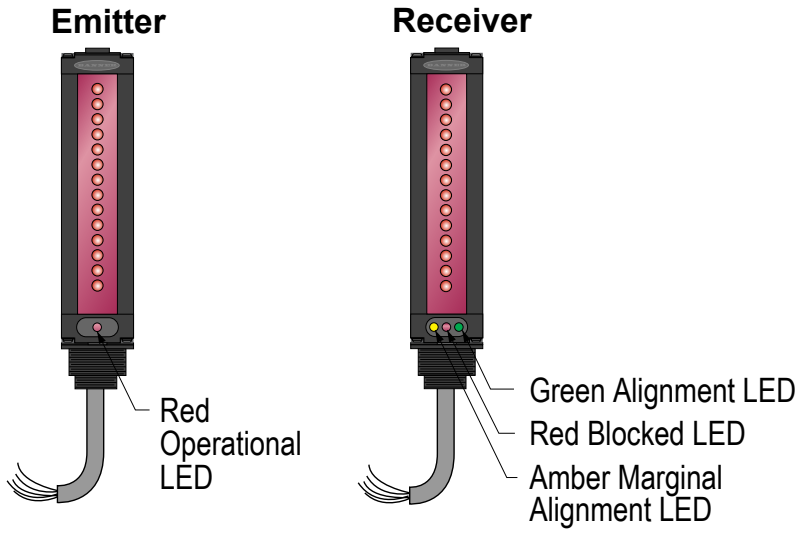


*Interlaced Scan*

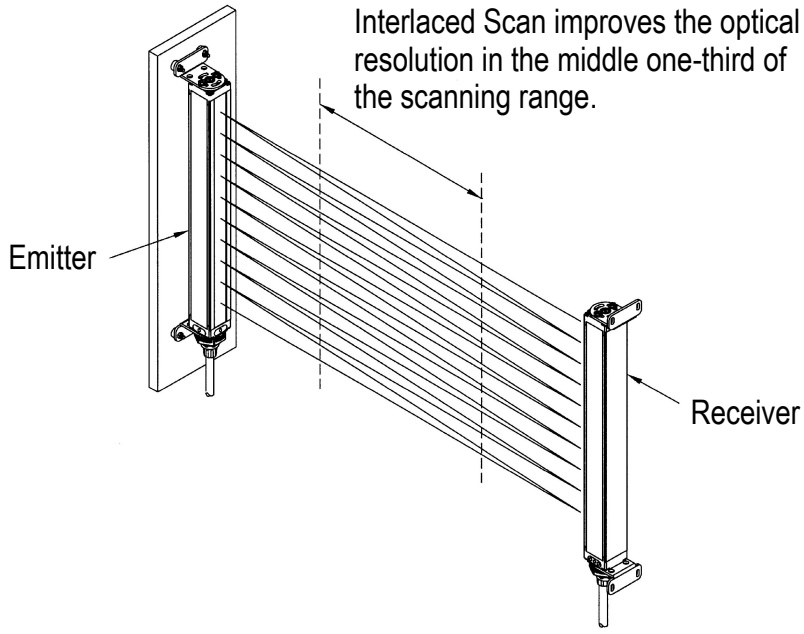


# Easy-to-Understand Diagnostic LEDs

The system provides simple, straightforward indications of sensor performance. See "Troubleshooting" on page 20 for a more detailed guide to troubleshooting system status using the diagnostic LEDs.


© Banner Engineering Corp. All rights reserved.

*Emitter: 1 Red Diagnostic LED*

| LED Condition | ON Solid | OFF | Flashing (5x per second) | Flashing (1x per second) |
|---|---|---|---|---|
| Red | Sensor is functioning normally | No power to emitter | Receiver is removed from the system | One or more emitter optical channel(s) not working properly |

The combined status of the Green and Red LEDs provides a simple sensor alignment process. The Amber LED signals a dirty lens or degraded sensor condition.

*Receiver: 3 Diagnostic LEDs (Green, Red, and Amber)*

| LED Condition | ON Solid | OFF | Flashing (2 Hz) |
|---|---|---|---|
| Green | Light curtain is unobstructed | Light curtain is obstructed | Non-functioning emitter |
| Red | Light curtain is obstructed | Light curtain is unobstructed | Non-functioning emitter |
| Amber | Dirty lens (whether the light curtain is blocked or clear); remains ON until the receiver detects proper light signal strength | n/a | Light signal of one of more beam(s) is degraded |

# Two Solid-State Outputs

The receiver has two discrete outputs (Output #1 and Output #2). Each output is independent and can be configured for either NPN or PNP operation. The sensor is factory-configured for NPN outputs, with Output #1 designated for vehicle separation detection and Output #2 for sensor health status output. These outputs are rated to 150 mA and are short circuit protected.

# EIA-485 Interface

The receiver has a serial EIA-485 interface to provide sensor profiling and system status information. See "Serial Communication" on page 14 for additional information.

# Sensing Scan Time

Sensing scan time is a function of the sensor length and number of beams interrogated that is, steps per scan of the array.

The models table provides scan times for the vehicle separation scanning application (labeled as interlaced scanning) for each light screen size. The worst-case response time is twice the scan time.

# Supplied System Software

The system provides other scanning modes and operation features, which are not optimized for vehicle separation but are useful for other applications.

These features are easily accessed using the Banner Sensors GUI software and an appropriate EIA-485 interface (consult a Banner Engineering representative for more information). The menu-driven program walks the user through the many scanning and output options. After selecting the desired options, download the settings to the receiver; the receiver stores the configuration settings in non-volatile memory.

The software also enables the user to check sensor alignment, obtain sensor readings, and verify sensor status. Use the built-in system diagnostics to assess emitter and receiver hardware errors or dirty lens locations.

# Vehicle Detection Applications (Output #1)

The MINI-ARRAY Two-Piece Measuring Light Curtain (3/4 in) features a superior interlaced (cross-hatched) beam pattern.

When the light screen is clear (no object is obstructing the receiver’s view of the emitted beam pattern), the sensor ignores small objects while waiting to detect the beginning of a vehicle. Up to 125 mm (5 inch) of consecutive light channels must be blocked before a valid object is detected; once the sensor detects 125 mm or more of consecutive blocked light, Output # 1 becomes active (output ON).


© Banner Engineering Corp. All rights reserved.
www.bannerengineering.com

# Trailer Hitch Detection Applications (Output #1)

After an object is detected, Output #1 remains active until the receiver again detects the entire emitter beam pattern (sensor is clear). The interlaced scan pattern detects smaller objects after initially detecting a vehicle, even if only one beam is obstructed. After the receiver detects a fully unobstructed light screen, Output #1 again becomes inactive (output OFF).

# System Self-Diagnostics

Output #2 can be configured for Alarm/Health Status using Banner's Sensor Configuration Software. This enables advanced electronic and signal processing to allow the receiver to continually monitor and evaluate light signal quality and alert the user to light signal degradation or sensor faults. The sensor can detect marginal alignment, permanently blocked channels, a faulty emitter element, or a non-functioning emitter.

The receiver was designed to detect system failures and remain operational. Potential problems include a dirty lens that completely blocks the optical light signal or a light signal failure (caused by either the emitter or receiver). Although sensor failures are rare, the Two-Piece MINI-ARRAY is designed to continue to function while warning the user of fault conditions. This minimizes system downtime and provides advanced notice that system maintenance or repairs are required.

Whenever the receiver detects proper operation, Output #2 is active (ON, a healthy condition). When the sensor detects a system problem (either a sensor fault or a degraded signal), Output #2 is inactive (turns OFF, an alarm condition).

A system problem is acknowledged in three ways:

1. The condition of the diagnostic LEDs.
2. Output #2 is inactive (OFF), when Output #2 is configured for Alarm/Health Status.
3. The condition can be transmitted to the monitoring system, via the EIA-485 interface (see "Request Sensor to Transmit System Status Information (Command 0×66)" on page 15).

# Marginal Alignment/Dirty Lens Detection

When the received light signal drops below a predetermined threshold, the receiver recognizes a marginal alignment or dirty lens condition. The dirty lens threshold is equivalent to three times the minimum light signal necessary for detection.

After this condition is detected, the receiver alerts the user that the lens surface should be cleaned or re-aligned. The amber diagnostic LED turns on until the condition is no longer detected (whether the light curtain is blocked or clear). This advance recognition can be used to initiate a proper maintenance process.

When Output #2 is configured for Alarm/Health Status, Output #2 is inactive (off).

# Fault Detection and Sensor Degradation Operation

The receiver detects an blocked (occluded) light channel when one or two consecutive light channels remain blocked after eight or more vehicles are detected. After a blocked channel is detected, the Amber diagnostic LED flashes at 2 hertz, the receiver notes the fault and begins to operate in sensor degradation mode. When Output #2 is configured for Alarm/Health Status, Output #2 is inactive (OFF).

After the receiver detects a permanently blocked optical channel, it effectively ignores the degraded optical channel while continuing to operate. This allows the sensor to continue working and, for many instances, provide reliable service.

Along with ignoring permanently blocked channels, the sensor continuously monitors sensor performance. If an optical channel become inoperable (due to a faulty light channel), the sensor detects the problem and begins to operate in the sensor degradation mode. Sensor degradation mode provides the user with advance notice of a fault while continuing to maintain a functional traffic lane.

Emitter faults: The receiver can detect a non-functioning emitter (possibly caused by a disconnected cable). The receiver’s Green and Red diagnostic LEDs flash at 2 hertz to signal this emitter condition.


© Banner Engineering Corp. All rights reserved.

Chapter Contents

Emitter and Receiver Mounting ..... 9
Center Bracket Mounting ..... 10
Emitter and Receiver Wiring ..... 12
Optically Align the Components ..... 13

# Chapter 3 Installation

## Emitter and Receiver Mounting

Banner MINI-ARRAY emitters and receivers are small, lightweight, and easy to mount. The mounting brackets (supplied) allow ±30 degrees rotation.

From a common point of reference, make measurements to position the emitter and receiver in the same plane with their midpoints directly opposite each other. Mount the emitter and receiver brackets using the M4 × 0.7 × 14 mm bolts and associated mounting hardware (all supplied).

Although the internal circuitry of the emitter and receiver can withstand heavy impulse forces, vibration isolators can be used instead of the M4 bolts to dampen impulse forces and prevent possible damage from resonant vibration of the emitter or receiver assembly. Two different Anti-Vibration Mounting Kits are available from Banner. See "Accessories" on page 21.

*MINI-ARRAY emitter and receiver mounting hardware*

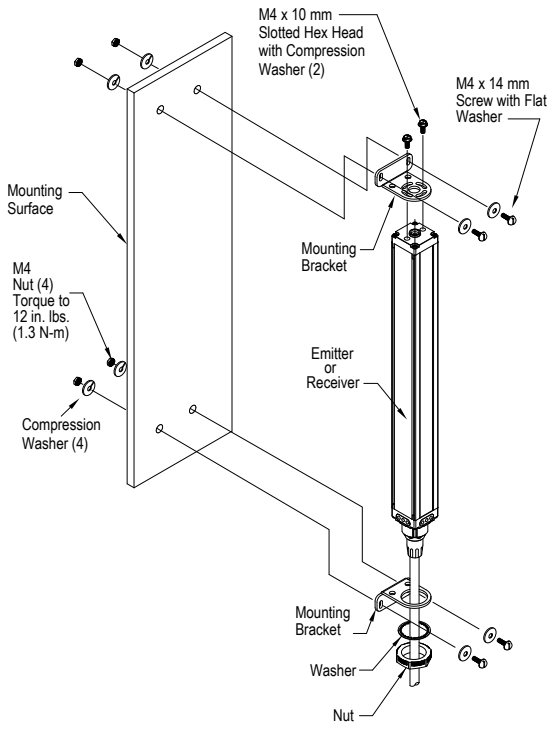


1. Mount the emitter and receiver in their mounting brackets (see "Figure: MINI-ARRAY emitter and receiver mounting hardware" on page 9).
2. Position the red lenses of the two units directly facing each other. The connector ends of both sensors must point in the same direction.
3. Measure from one or more reference planes (such as the floor) to the same points on the emitter and receiver to verify their mechanical alignment. If the sensors are positioned exactly vertical or exactly horizontal, a carpenter's


© Banner Engineering Corp. All rights reserved.
www.bannerengineering.com

level may be useful for checking alignment. Extending a straight-edge or a string between the sensors may help with positioning.

4. Also check by eye for line-of-sight alignment.
5. Make any necessary final mechanical adjustments, and hand-tighten the bracket hardware.
6. Prepare the cables: The drain wire is the uninsulated stranded wire which runs between the cable jacket and the foil shield. Remove the foil shield at the point where the wires exit the cable.

*Emitter/Receiver Cable Preparation*

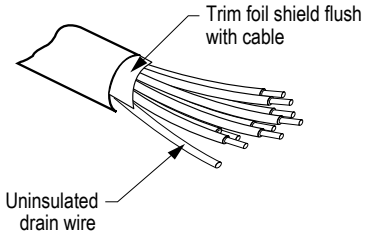


7. Connect the shielded cables to the emitter and receiver. Follow the local wiring code for low-voltage dc control cables. The same cable type is used for both emitter and receiver (two cables required per system).
8. Route the cables to the terminal location.

*Cable Clearances*

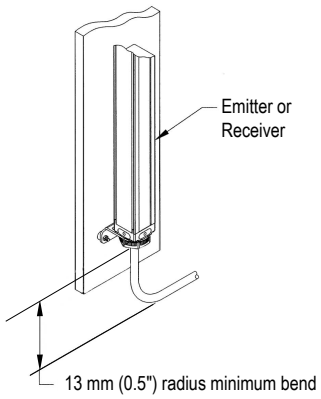


9. Cut the cables to length after making sure they are routed properly.

# Center Bracket Mounting

Center mounting brackets must be used with long sensors, if they are subject to shock or vibration. The sensors are designed to be mounted with up to 900 mm unsupported distance (between brackets). Sensors 1050 mm and longer must use a center mounting bracket with the standard end-cap brackets.

1. Attach the center bracket to the mounting surface and use the shim plates with the end-cap brackets to make a flush mounting.
2. Attach the clamp loosely to the housing, using the included M5 screws and T-nuts.
3. After the sensor is mounted to the end-cap brackets, attach the clamp to the center bracket using a supplied M5 screw and tighten down the clamp to the sensor housing.


© Banner Engineering Corp. All rights reserved.

*MINI-Array center bracket mounting*

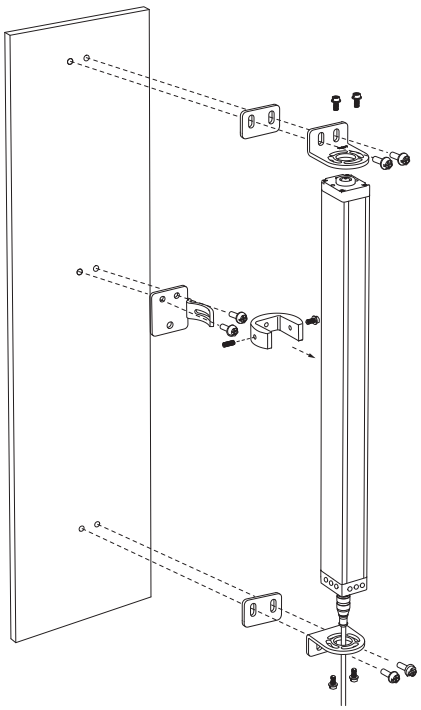

*MINI-ARRAY center bracket mounting hardware*

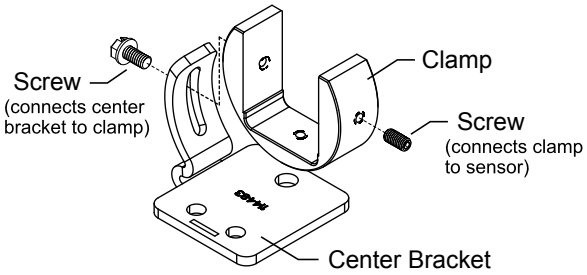



© Banner Engineering Corp. All rights reserved.

# Emitter and Receiver Wiring

Connect the emitter and receiver cables as shown.

*NPN Wiring Diagram*

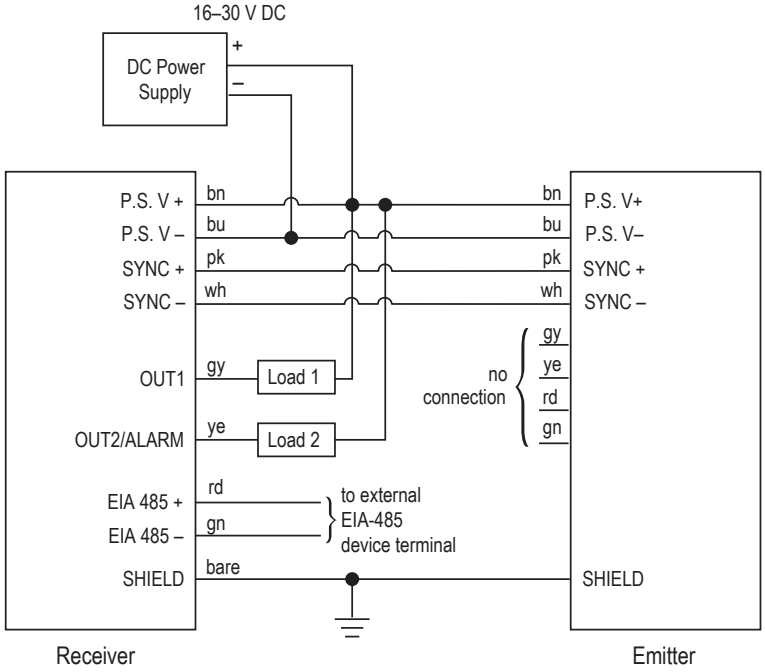


*PNP Wiring Diagram*

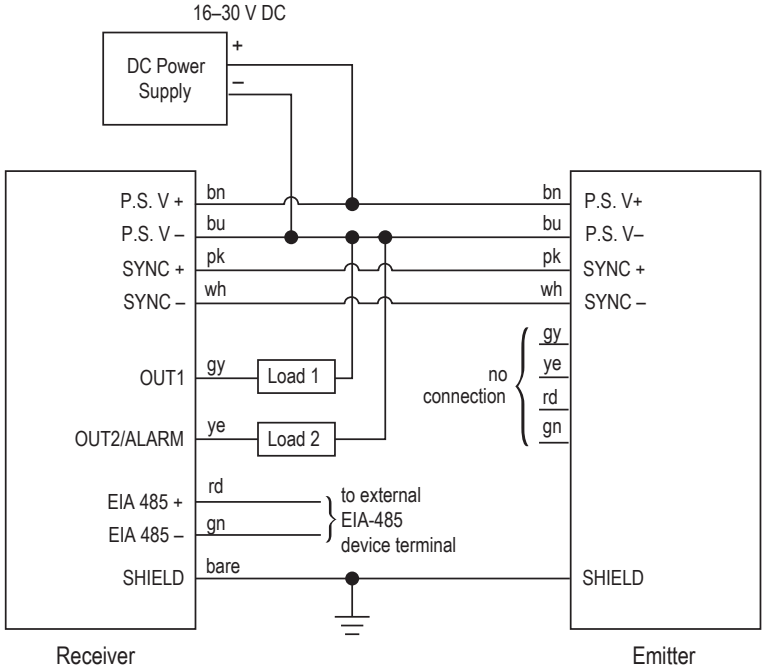


Receiver Output 1: (OUT1) is an open-collector transistor switch rated at 30 V DC maximum, 150 mA maximum. It is protected against overload and short circuits.

Receiver Output 2/Alarm: (OUT2/ALARM) is an open-collector transistor switch rated at 30 V DC maximum, 150 mA maximum. It is protected against overload and short circuits.


© Banner Engineering Corp. All rights reserved.
www.bannerengineering.com

Both outputs can be configured as NPN (current sinking) or PNP (current sourcing).

# Optically Align the Components

Follow these steps to optically align the light curtain emitter and receiver.

1. Verify the light curtain components are mechanically aligned and the cables are connected.
2. Apply 16 V DC to 30 V DC power to the sensor.
3. Rotate the emitter and/or receiver as necessary to align them.
4. Align the emitter and receiver until the receiver’s green LED is on and the amber and red LED are off.


© Banner Engineering Corp. All rights reserved.

Chapter Contents

Serial Communication Data Format ..... 14
Request Sensor to Scan Command (Command 0×53) ..... 14
Request Sensor to Transmit all Receiver Channel State (Command 0×64) ..... 15
Request Sensor to Transmit System Status Information (Command 0×66) ..... 15
Request Sensor to Transmit One or Two Measurement Values (Command 0×67) ..... 16

# Chapter 4 Serial Communication

This section describes the serial communication data format and the commands that are available to serially communicate over the EIA-485 interface. Use the serial commands to initiate scanning, request sensor light channel information, request system status, and request one or two sensor measurements. The serial communication data format used by the sensor is described and related to the sensor commands; examples follow.

## Serial Communication Data Format

The serial communication utilizes a standard universal asynchronous receiver/transmitter architecture. The sensor baud rate can be 9600, 19200, or 38400. The data has one start bit, one stop bit, no parity, eight data bits and is transmitted least significant bit first. The serial communication string format consists of a start-of-header byte, a sensor-identification byte, a command byte, a count of the data bytes, the data bytes, and a two-byte check sum.

All serial communication follows this data format. The start-of-header byte always has a hexadecimal value 0×F4 (244 decimal). The sensor identification byte can have hexadecimal values ranging from 0×41 through 0×5A (65 through 90 decimal). The command bytes used for the sensor are listed in the following table:

| Command Value (Hexadecimal) | Command Description |
|---|---|
| 0×53 | Request Sensor to Scan |
| 0×64 | Request Sensor to Transmit Each Optical Channel State (0-clear, 1-blocked) |
| 0×66 | Request Sensor to Transmit System Status Information |
| 0×67 | Request Sensor to Transmit One or Two Measurement Values |

The count of the data bytes defines the number of data bytes that are transmitted for the particular command. For instance, if four data bytes are transmitted, then the value for the number of data bytes is equal to four. The actual data bytes follow the byte representing the number of data bytes. The check sum is a two-byte value that is calculated by summing the previous bytes in the string. Once the sum is known, then a one's complement of the sum is calculated and used as the string check sum value. Examples are given in the description of each command.

## Request Sensor to Scan Command (Command 0×53)

This command is used when the sensor is configured for host scanning. This command is useful for instances where multiple sensors are present and sensor cross-talk is an issue. Assuming the sensor ID is 0×41, the command string would be as follows:

Transmit string to sensor: 0×F4, 0×41, 0×53, 0×00, 0×77, 0×FE

Receive string from sensor: 0×F4, 0×41, 0×53, 0×01, 0×06, 0×70, 0×FE

This receive string would be interpreted as follows:

0×F4 is the start-of-header byte
0×41 is the sensor-identification byte
0×53 is the command requesting the sensor scan initiation
0×01 is the number of data bytes
0×06 is the valid response stating that the sensor initiated a scan

The last two bytes are the checksum in low-byte, high-byte order and calculated as follows:

0×F4 + 0×41 + 0×53 + 0×01 + 0×06 = 0×18F.
The one's complement of 0×18F = 0×FE70.
Hence, the low-byte, high-byte order would be 0×70, 0×FE.


© Banner Engineering Corp. All rights reserved.
www.bannerengineering.com

# Request Sensor to Transmit all Receiver Channel State (Command 0×64)

This command requests the sensor to provide the state of each optical channel. The two states for each optical channel are clear (value =0) and blocked (value =1). Eight optical channels of information are transmitted in each data byte. The first data byte contains the information for the eight optical channels located closest to the sensor cable end cap. The following data bytes contain information for eight successive optical channel sections. For a data byte, each bit of the data byte is directly related to the status of an individual optical channel. For example, if the first eight optical channels have the following states:

| Optical Channel Position | Status | Binary Value | Optical Channel Position | Status | Binary Value |
|---|---|---|---|---|---|
| 1 | Blocked | 1 | 5 | Clear | 0 |
| 2 | Clear | 0 | 6 | Blocked | 1 |
| 3 | Blocked | 1 | 7 | Clear | 0 |
| 4 | Blocked | 1 | 8 | Clear | 0 |

Then the data byte is 0×2D. If the array has 32 optical channels, then there would be four data bytes representing the status of all 32 optical channels. Assume that the sensor ID is 0×41 and the following serial transmission occurs:

Transmit string to sensor: 0×F4, 0×41, 0×64, 0×00, 0×66, 0×FE

Receive string from sensor: 0×F4, 0×41, 0×64, 0×04, 0×2D, 0×03, 0×C0, 0×81, 0×F1, 0×FC

This receive string is interpreted as follows:

0×F4 is the start-of-header byte
0×41 is the sensor-identification byte
0×64 is the command requesting the sensor optical channel information
0×04 is the number of data bytes
0×2D optical channels 1, 3, 4, 6 are blocked; optical channels 2, 5, 7, 8 are clear
0×03 optical channels 9 and 10 are blocked; optical channels 11-16 are clear
0×C0 optical channels 17-22 are clear; optical channels 23 and 24 are blocked
0×81 optical channels 25 and 32 are blocked; optical channels 26-31 are clear
The last two bytes are the checksum in low-byte, high-byte order.

# Request Sensor to Transmit System Status Information (Command 0×66)

Use this command to extract information about the sensor. The information that can be received includes the following six data bytes:

- Number of emitter channels
- First emitter failed channel
- Number of receiver channels
- First bad receiver channel
- State
  - 0—System is working properly
  - 1—System detects a weak alignment
  - 2—System detects a dirty lens
  - 3—System detects a degraded emitter (faulty emitter element)
  - 4—System detects that the emitter is not functioning
- Degraded channel

Assume that the system has 48 channels and the system detects weak alignment. The transmit and receiver strings is as follows:

Transmit string to sensor: 0×F4, 0×41, 0×66, 0×00, 0×64, 0×FE

Receive string from sensor: 0×F4, 0×41, 0×66, 0×06, 0×30, 0×00, 0×30, 0×00, 0×01, 0×00, 0×FD, 0×FD

This receive string is interpreted as follows:

0×F4 is the start-of-header byte


© Banner Engineering Corp. All rights reserved.

0×41 is the sensor-identification byte
0×66 is the command requesting the sensor status information
0×06 is the number of data bytes
0×30 there are 48 emitter channels
0×00 all emitter channels are OK
0×30 there are 48 receiver channels (that’s good, because the emitter has 48 channels also)
0×00 all receiver channels are OK
0×01 the system detects weak alignment
0×00 there are no degraded channels
The last two bytes are the checksum in low-byte, high-byte order.

# Request Sensor to Transmit One or Two Measurement Values (Command 0×67)

This command requests the sensor to transmit the previous scan’s measurement values (one or two measurement values). The command transmits either two or four bytes (as specified by the sensor configuration). Assume that the sensor ID is 0×41 and the sensor is configured to transmit the First Beam Blocked and Total Beams Blocked information. Also assume that the twentieth light channel happens to be the first beam blocked and a total of 15 light channels are blocked.

Transmit string to sensor: 0×F4, 0×41, 0×67, 0×00, 0×63, 0×FE

Receive string from sensor: 0×F4, 0×41, 0×67, 0×04, 0×14, 0×00, 0×0F, 0×00, 0×3C, 0×FE

This receive string is interpreted as follows:

0×F4 is the start-of-header byte
0×41 is the sensor-identification byte
0×67 is the command requesting the sensor measurement information
0×04 is the number of data bytes
0×14, 0×00 is the low-byte, high-byte integer value for the first beam blocked = 20
0×0f, 0×00 is the low-byte, high-byte integer value for the total beams blocked=15

The last two bytes are the checksum in low-byte, high-byte order. The checksum is calculated as follows:

0×F4 + 0×41 + 0×67 + 0×04 + 0×14 + 0×00 + 0×0F + 0×00 = 0×1C3.
The one's complement of 0×1C3 = 0×FE3C.
Hence, the low-byte, high-byte order is 0×3C, 0×FE.


© Banner Engineering Corp. All rights reserved.

Chapter Contents

Emitter and Receiver Mounting Dimensions ..... 18
Emitter and Receiver Mounting Bracket Dimensions ..... 19

# Chapter 5 Specifications

**Supply Voltage and Power**

16 V DC to 30 V DC; maximum power 12 watts

**Supply Protection Circuitry**

Protected against reverse polarity and transient voltages

**Discrete Output Configuration**

Two discrete outputs: Output 1 and Output 2

Outputs can be configured as either open collector NPN or PNP transistors. For the vehicle separation application, the outputs are factory configured as NPN outputs.

**Discrete Output (either NPN or PNP) Ratings**

Rated at 30 V DC max, 150 mA max load, short circuit protected

OFF-State Leakage Current: < 10 µA at 30 V DC

ON-State Saturation Voltage: < 1 V DC at 10 mA, < 1.5 V DC at 150 mA

**Serial Data Outputs**

EIA-485 interface

Baud rate 9600, 19.2 K, 38.4 K

8 data bits, 1 start bit, 1 stop bit, no parity

**Sensor Scan Time**

Worst-case response time is twice the scan time

**Cable Connections**

Emitter and receiver cables may not exceed 80 m (250 ft) each

150 mm (6.5 inch) PVC cable with M12 quick disconnect

Quick disconnect cordsets available separately

**Status Indicators**

Emitter: Red LED lights for proper operation

Receiver: Green – sensors aligned (> 3x excess gain); Amber– marginal alignment (1x-3x excess gain); Red – sensors misaligned or beam(s) blocked

**Environmental Rating**

IP65

UL Type 1 enclosure

**Construction**

Aluminum housing with black anodized finish; acrylic lens cover

**Controller Programming**

Via EIA-485 to Banner Sensors GUI software

**Emitter/Receiver Range**

Sensors < 1220 mm (4 ft) long: 16.5 m (55 ft)

Sensors ≥ 1220 mm (4 ft) long: 13.5 m (45 ft)

**Minimum Object Sensitivity**

Interlaced Mode: 25.4 mm (1.0 in) (assumes sensing is in the middle one-third of the scanning range; requires a minimum separation of emitter/receiver of 0.9 m (3 ft))

Other Scan Modes: 38.1 mm (1.5 in) (requires a minimum separation of emitter/receiver of 0.9 m (3 ft))

**Operating Conditions**

–40 °C to +70 °C (–40 °F to +158 °F)

95% maximum relative humidity (non-condensing)

**Application Notes**

The emitter and receiver sync lines (pink and white wires) will be damaged if connected to the power supply

The receiver EIA-485 interface (red and green wires) will be damaged if connected to the power supply

**Certifications**

Banner Engineering BV
Park Lane, Culliganlaan 2F bus 3
1831 Diegem, BELGIUM

**Required Overcurrent Protection**

**WARNING:** Electrical connections must be made by qualified personnel in accordance with local and national electrical codes and regulations.

Overcurrent protection is required to be provided by end product application per the supplied table.

Overcurrent protection may be provided with external fusing or via Current Limiting, Class 2 Power Supply.

Supply wiring leads < 24 AWG shall not be spliced.

For additional product support, go to www.bannerengineering.com.

| Supply Wiring (AWG) | Required Overcurrent Protection (A) | Supply Wiring (AWG) | Required Overcurrent Protection (A) |
|---|---|---|---|
| 20 | 5.0 | 26 | 1.0 |
| 22 | 3.0 | 28 | 0.8 |
| 24 | 2.0 | 30 | 0.5 |


© Banner Engineering Corp. All rights reserved.
www.bannerengineering.com

# Emitter and Receiver Mounting Dimensions

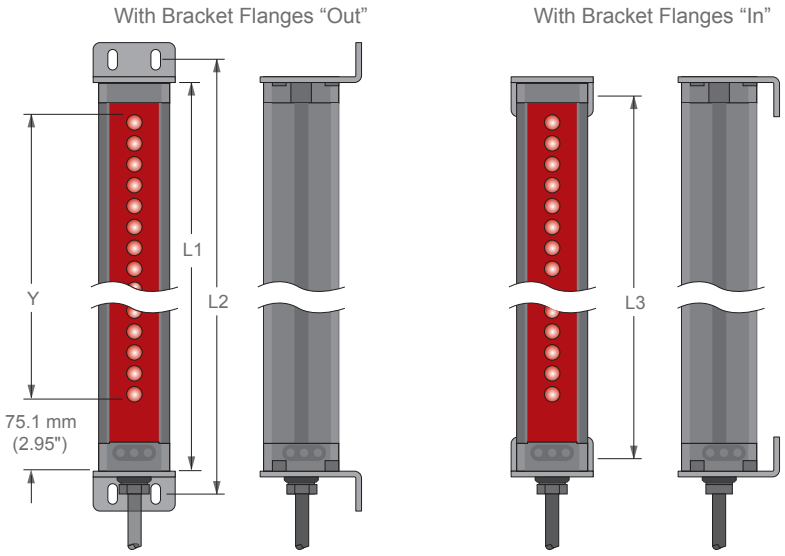


| Emitter/Receiver Models | Housing Length (L1) | Distance Between Bracket Holes | |
|---|---|---|---|
| | | L2 | L3 |
| **MAE616Q Emitter<br>MAR616NX485Q Receiver** | 231 mm (9.1 in) | 262 mm (10.3 in) | 205 mm (8.1 in) |
| **MAE1216Q Emitter<br>MAR1216NX485Q Receiver** | 384 mm (15.1 in) | 414 mm (16.3 in) | 357 mm (14.1 in) |
| **MAE1816Q Emitter<br>MAR1816NX485Q Receiver** | 536 mm (21.1 in) | 567 mm (22.3 in) | 510 mm (20.1 in) |
| **MAE2416Q Emitter<br>MAR2416NX485Q Receiver** | 689 mm (27.1 in) | 719 mm (28.3 in) | 662 mm (26.1 in) |
| **MAE3016Q Emitter<br>MAR3016NX485Q Receiver** | 841 mm (33.1 in) | 871 mm (34.3 in) | 815 mm (32.1 in) |
| **MAE3616Q Emitter<br>MAR3616NX485Q Receiver** | 993 mm (39.1 in) | 1024 mm (40.3 in) | 967 mm (38.1 in) |
| **MAE4216Q Emitter<br>MAR4216NX485Q Receiver** | 1146 mm (45.1 in) | 1176 mm (46.3 in) | 1119 mm (44.1 in) |
| **MAE4816Q Emitter<br>MAR4816NX485Q Receiver** | 1298 mm (51.1 in) | 1329 mm (52.3 in) | 1272 mm (50.1 in) |
| **MAE5416Q Emitter<br>MAR5416NX485Q Receiver** | 1451 mm (57.1 in) | 1481 mm (58.3 in) | 1424 mm (56.1 in) |
| **MAE6016Q Emitter<br>MAR6016NX485Q Receiver** | 1603 mm (63.1 in) | 1633 mm (64.3 in) | 1577 mm (62.1 in) |
| **MAE6616Q Emitter<br>MAR6616NX485Q Receiver** | 1755 mm (69.1 in) | 1786 mm (70.3 in) | 1729 mm (68.1 in) |
| **MAE7216Q Emitter<br>MAR7216NX485Q Receiver** | 1908 mm (75.1 in) | 1938 mm (76.3 in) | 1881 mm (74.1 in) |


© Banner Engineering Corp. All rights reserved.
www.bannerengineering.com

# Emitter and Receiver Mounting Bracket Dimensions

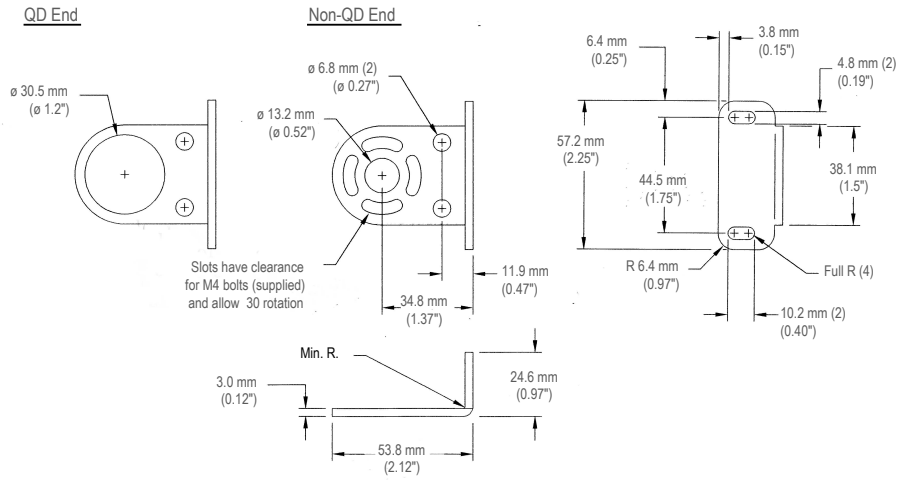



© Banner Engineering Corp. All rights reserved.
www.bannerengineering.com

Chapter Contents

# Chapter 6 Troubleshooting

The emitter has a single red status LED. Use the receiver's three LEDs (green, amber, and red) to diagnose system status.

| Receiver LED Condition | | | System Status | Possible Action |
|---|---|---|---|---|
| Green | Amber | Red | | |
| ON | OFF | OFF | Emitter/receiver pair aligned | None |
| ON | ON | OFF | Emitter/receiver pair aligned with dirty lens or marginal signal | Clean lenses; align emitter and receiver |
| OFF | OFF | ON | Emitter/receiver pair blocked | None |
| OFF | ON | ON | Emitter/receiver pair blocked with dirty lens or marginal signal | Clean lenses; align emitter and receiver |
| ON | ON | ON | Receiver error | Replace receiver |
| ON | Flashing (2 Hz) | OFF | Degraded mode; emitter/receiver pair aligned | Clean lenses; align emitter and receiver [3] |
| OFF | Flashing (2 Hz) | ON | Degraded mode; emitter/receiver pair blocked | |
| Flashing (2 Hz) | OFF | Flashing (2 Hz) | Emitter is not functioning | Connect emitter |

[3] If the emitter diagnostic LED is solid red after cleaning the emitter and receiver lenses, consider replacing the receiver.


© Banner Engineering Corp. All rights reserved.

Chapter Contents

Cordsets ..... 21
Anti-Vibration Mounting Kits ..... 21
Center Mounting Bracket Kit ..... 21

# Chapter 7 Accessories

## Cordsets

Additional lengths are available.

| 8-Pin Single-Ended M12 Female Shielded Cordsets | | | | | |
|---|---|---|---|---|---|
| **Model** | **Length** | **Style** | **Dimensions** | **Pinout (Female)** | |
| **MAQDC-806** | 2 m (6.56 ft) | Straight | 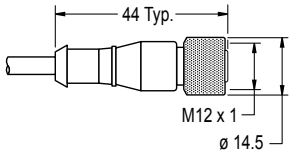 | 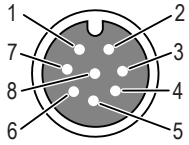 | |
| **MAQDC-815** | 5 m (16.4 ft) | | | | |
| **MAQDC-830** | 10 m (32.81 ft) | | | | |
| **MAQDC-850** | 15 m (49.21 ft) | | | 1 = White<br>2 = Brown<br>3 = Green<br>4 = Yellow | 5 = Gray<br>6 = Pink<br>7 = Blue<br>8 = Red |

## Anti-Vibration Mounting Kits

**MSVM-1**

- 4 anti-vibration mounts (M4 × 0.7 × 9.5 mm)
- 8 M4 Keps nuts
- These mounts are made from BUNA-N rubber and are more resistant to chemicals and oils

**MAVM-1**

- 4 anti-vibration mounts (M4 × 0.7 × 9.5 mm)
- 8 M4 Keps nuts
- These mounts are made from natural rubber, which are less chemically resistant than the MSVM-1 mounts but have a greater sheer force specification at higher temperatures

## Center Mounting Bracket Kit

**EZA-MBK-12-CB**

- Includes one center bracket and hardware to mount to MSA Series stands
- Includes 2 shim plates for standard end-cap brackets to allow flush mounting
- M5 mounting hardware
- CAD Files: DXF, PDF, IGS, STP

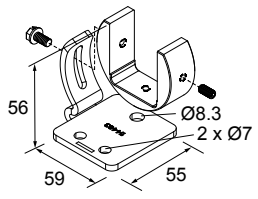



© Banner Engineering Corp. All rights reserved.
www.bannerengineering.com

Chapter Contents

Contact Us ..... 22
Banner Engineering Corp Limited Warranty ..... 22

# Chapter 8 Product Support and Maintenance

## Contact Us

Banner Engineering Corp. | 9714 Tenth Avenue North | Plymouth, MN 55441, USA | Phone: + 1 888 373 6767

For worldwide locations and local representatives, visit www.bannerengineering.com.

## Banner Engineering Corp Limited Warranty

Banner Engineering Corp. warrants its products to be free from defects in material and workmanship for one year following the date of shipment. Banner Engineering Corp. will repair or replace, free of charge, any product of its manufacture which, at the time it is returned to the factory, is found to have been defective during the warranty period. This warranty does not cover damage or liability for misuse, abuse, or the improper application or installation of the Banner product.

**THIS LIMITED WARRANTY IS EXCLUSIVE AND IN LIEU OF ALL OTHER WARRANTIES WHETHER EXPRESS OR IMPLIED (INCLUDING, WITHOUT LIMITATION, ANY WARRANTY OF MERCHANTABILITY OR FITNESS FOR A PARTICULAR PURPOSE), AND WHETHER ARISING UNDER COURSE OF PERFORMANCE, COURSE OF DEALING OR TRADE USAGE.**

This Warranty is exclusive and limited to repair or, at the discretion of Banner Engineering Corp., replacement. **IN NO EVENT SHALL BANNER ENGINEERING CORP. BE LIABLE TO BUYER OR ANY OTHER PERSON OR ENTITY FOR ANY EXTRA COSTS, EXPENSES, LOSSES, LOSS OF PROFITS, OR ANY INCIDENTAL, CONSEQUENTIAL OR SPECIAL DAMAGES RESULTING FROM ANY PRODUCT DEFECT OR FROM THE USE OR INABILITY TO USE THE PRODUCT, WHETHER ARISING IN CONTRACT OR WARRANTY, STATUTE, TORT, STRICT LIABILITY, NEGLIGENCE, OR OTHERWISE.**

Banner Engineering Corp. reserves the right to change, modify or improve the design of the product without assuming any obligations or liabilities relating to any product previously manufactured by Banner Engineering Corp. Any misuse, abuse, or improper application or installation of this product or use of the product for personal protection applications when the product is identified as not intended for such purposes will void the product warranty. Any modifications to this product without prior express approval by Banner Engineering Corp will void the product warranties. All specifications published in this document are subject to change; Banner reserves the right to modify product specifications or update documentation at any time. Specifications and product information in English supersede that which is provided in any other language. For the most recent version of any documentation, refer to: www.bannerengineering.com.

For patent information, see www.bannerengineering.com/patents.


© Banner Engineering Corp. All rights reserved.

LinkedIn

X

Facebook

Instagram




© 2026. All rights reserved.