Sure Cross® MultiHop Quick Start Guide

A set-up guide for the Sure Cross MultiHop wireless systems

Stop!

Read these instructions before using your Sure Cross MultiHop radios.
Do not discard these instructions.

For more detailed information about installing and using your Sure Cross products, download and read the Sure Cross Wireless I/O Network Manual, p/n 151317.

p/n 152653 Rev. D

Important: Never operate the radios without connecting an antenna

Operating radios without an antenna connected will damage the radio circuitry.

To avoid damaging the radio circuitry, never apply power to a Sure Cross® Performance or Sure Cross® MultiHop radio without an antenna connected.

⚠ WARNING . . . Do not use this device for personnel protection

Using this device for personnel protection could result in serious injury or death.

This device does not include the self-checking redundant circuitry necessary to allow its use in personnel safety applications. A device failure or malfunction can cause either an energized (on) or de-energized (off) output condition.

Step 1: Select the Client, Repeater, and Server Radios

Before beginning operation, you must select one radio to be the client radio. Set the other MultiHop radios to operate as either repeaters (default setting) or servers.

1. Remove the top covers of the MultiHop radios.
2. Set one unit to be the client radio.
3. Set the other MultiHop radios to be repeaters or servers.
4. Set additional DIP switches now. (See the DIP switches section of your specific devices' datasheets for the positions and descriptions. Battery-powered radios may have different DIP switch settings than shown below.)

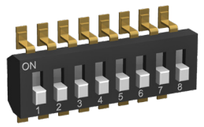

	DIP Switches	
	7	8
Repeater (default)	OFF	OFF
Client	OFF	ON
Server	ON	OFF

	DIP Switches					
Default configuration	**1**	**2**	**3**	**4**	**5**	**6**
Serial baud rate: 19.2k	OFF	OFF				
No parity			OFF	OFF		
1 Watt transmit mode (900 MHz only)					OFF	
Modbus application mode						OFF

Step 2: Apply Power



The FlexPower MultiHop radios operate when powered from the brown or gray wire. It is not necessary to supply power to both.

Apply power to the radios by connecting the cable as shown in the wiring diagram.

5-pin M12 connector pin	"C" model terminals	Wire color	10-30 V DC powered radios*	Solar or battery-powered radios**
1	V+	Brown	+10–30 V DC	
3	V-	Blue	dc common (GND)	dc common (GND)
5	B+	Gray		3.6–5.5V DC

* Only use pin 5 (gray wire) for radios capable of being powered by solar or battery modules.

** For solar and battery-powered radios, do not apply more than 5.5 V DC to pin 5 or the B+ terminal.

For the communication pin configuration or more details, refer to your specific devices' datasheets.

Step 3: Bind the Radios to Form Networks

Binding MultiHop radios to the client radio ensures the MultiHop radios only exchange data within their wireless network. MultiHop radios will not communicate until they are bound. Bind the radios before installing them to their final locations.

On the Client radio

1. Triple-click button 2 to enter binding mode. For models with only one button, triple-click the button.

   For the two LED/button models, both LEDs flash red. For single LED/button models, the LED flashes alternatively red and green.

On the Repeater or Server radios

2. Triple-click button 2 on the server/repeater radio. For models with only one button, triple-click the button.

   The child radio enters binding mode and searches for any client radio in binding mode. While searching for the client radio, the two red LEDs flash alternately. After the child radio finds the client radio and is bound, both red LEDs are solid for four seconds, then both red LEDs flash simultaneously four times.

3. Use both rotary dials to assign a decimal MultiHop Radio ID between 11 and 61. The left rotary dial represents the tens digit (1–6) and the right dial represents the ones digit (0–9) of the MultiHop Radio ID.
4. Repeat steps 2 and 3 for as many server or repeater radios as are needed for your network.



On the Client radio

5. After all MultiHop radios are bound, exit binding mode on the client by double-clicking button 2. All radio devices begin forming the network after the client data radio exits binding mode.

Step 4: Verify Communications

When testing the devices before installation, verify the radio devices are at least two meters apart or the communications may fail.

LED 1	LED 2	Status
Green on, then green flashing		Server/repeater: entering RUN mode
Green flashing		Client: in RUN mode Server/repeater: synchronized to the parent radio
Red on		Server/repeater: detected parent radio and searching for other parents within range
Red flashing		Server/repeater: searching for a parent radio
	Amber on	Server/repeater: selects a suitable parent Client: power applied
	Amber flashing	Server/repeater: serial data packets transmitting between radio and its parent Server: serial data packets transmitting between the client and its children radios
	Red on	Server/repeater: synchronizing to selected parent radio
	Red flashing	

ПРОМЭЛЕКТРОНИКА/ sales@prom-elec.com

Step 5: Conduct a Site Survey Using the Menu System

Perform the site survey before installing your network to pre-screen a site for its radio communication potential, compare link quality in different locations, or assist with final antenna placement and aiming.

Site surveys can be conducted from the client, repeater, or server radios. For a more detailed description of the parent-child relationships, refer to the device's datasheets.

1. On a data radio, press button 1 until the display reads *SITE.
2. Single-click button 2 to enter the Site Survey menu.
3. From the client radio: Single-click button 2 to display the child radio's device address. (A radio's device address is displayed under its *RUN menu). Single click button 1 to scroll between all the master radio's children. When you reach the child radio you want to run the Site Survey with, single-click button 2.

   From the repeater radio: Single-click button 1 to cycle between PARENT and CHLDRN. Single-click button 2 to select PARENT or CHLDRN. If conducting the Site Survey with one of the repeater's children, single-click button 1 to scroll among a repeater's children radios. (Each data radio's device address is displayed under its *RUN menu.) Single-click button 2 at the device address screen to select the child or parent and begin the Site Survey.

   From the server radio: Single-click button 2 to display PARENT. Single-click button 2 to begin the Site Survey.
4. The site survey begins. LED 2 on both the parent and child radios flash for every received RF packet. To indicate the parent is in site survey mode, LED 1 is a solid green. The radio analyzes the quality of the signal between the parent and child by counting the number of data packets received and measuring the signal strength (green, yellow, and red).
5. Examine reception readings (G, Y, R, M) of the devices at various locations. M displays the percent of missed packets while G, Y, and R display the percent of received packets at those signal strengths.

   GRN = GREEN excellent signal strength; YEL = YELLOW good signal strength; RED = RED marginal signal strength; MIS = Percentage of missed packets.
6. During a site survey, single-click button 2 to pause/resume autoscrolling the results. While paused, button 1 advances through the four signal strength categories. Double-click button 2 to exit the results display.
7. Double-click button 2 on either the child or the parent device to exit site survey. The devices automatically resume operation.

Step 6: Installing Your Sure Cross Radios

For most outdoor applications, we recommend installing your Sure Cross devices inside a secondary enclosure. If not using an enclosure, mount the radios where rain or snow will drain away from the unit.

To minimize the damaging effects of ultra-violet radiation, avoid mounting the radios facing intense direct sunlight.



MultiHop Configuration Software

Banner's MultiHop Configuration Sofware offers an easy way to configure and view your MultiHop radio network.

The configuration software requires the USB to RS-485 converter cable, BWA-UCT-900.



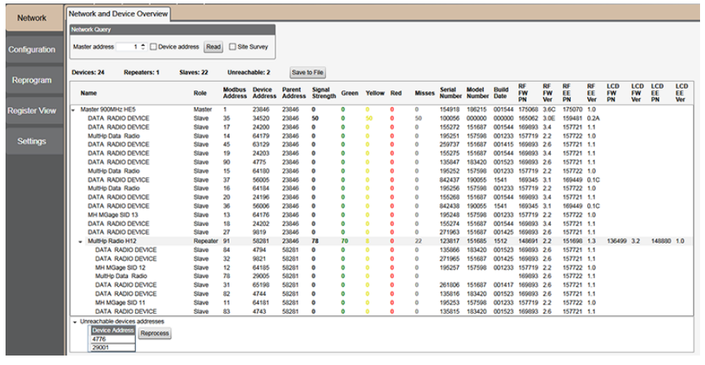

MultiHop Radio Mounting Template

The gray-shaded section represents the DX80...C housings' removable terminal headers.

Only if you are using the printed copy provided by Banner can this be used as a mounting template.

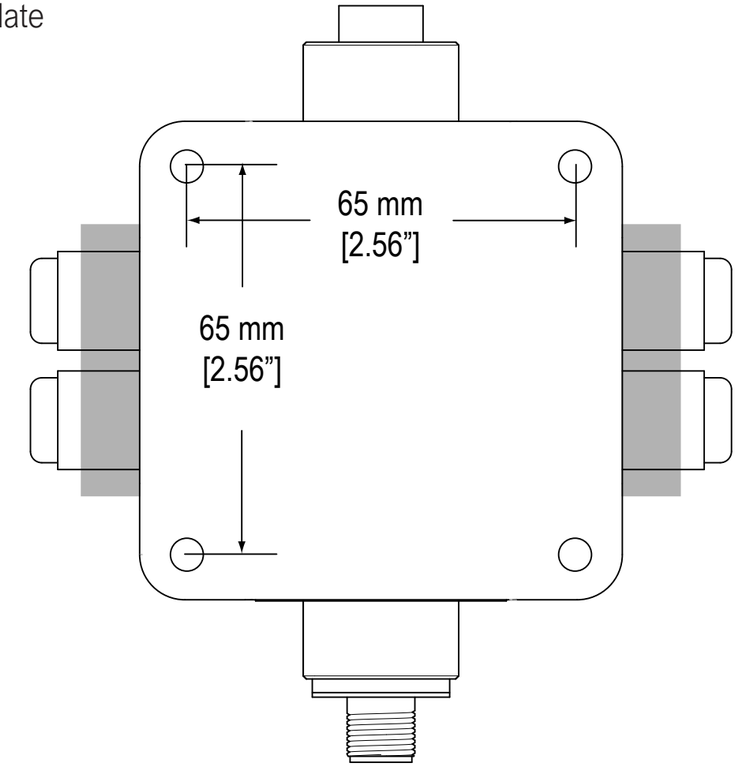

For additional information, including installation and configuration, weatherproofing, device menu maps, troubleshooting, and a list of accessories, please refer to the Sure Cross® MultiHop product manual, Banner p/n 151317.

BANNER®

Banner Engineering Corp. warrants its products to be free from defects in material and workmanship for one year following the date of shipment. Banner Engineering Corp. will repair or replace, free of charge, any product of its manufacture which, at the time it is returned to the factory, is found to have been defective during the warranty period. This warranty does not cover damage or liability for misuse, abuse, or the improper application or installation of the Banner product.

THIS LIMITED WARRANTY IS EXCLUSIVE AND IN LIEU OF ALL OTHER WARRANTIES WHETHER EXPRESS OR IMPLIED (INCLUDING, WITHOUT LIMITATION, ANY WARRANTY OF MERCHANTABILITY OR FITNESS FOR A PARTICULAR PURPOSE), AND WHETHER ARISING UNDER COURSE OF PERFORMANCE, COURSE OF DEALING OR TRADE USAGE.

This Warranty is exclusive and limited to repair or, at the discretion of Banner Engineering Corp., replacement. IN NO EVENT SHALL BANNER ENGINEERING CORP. BE LIABLE TO BUYER OR ANY OTHER PERSON OR ENTITY FOR ANY EXTRA COSTS, EXPENSES, LOSSES, LOSS OF PROFITS, OR ANY INCIDENTAL, CONSEQUENTIAL OR SPECIAL DAMAGES RESULTING FROM ANY PRODUCT DEFECT OR FROM THE USE OR INABILITY TO USE THE PRODUCT, WHETHER ARISING IN CONTRACT OR WARRANTY, STATUTE, TORT, STRICT LIABILITY, NEGLIGENCE, OR OTHERWISE.

Banner Engineering Corp. reserves the right to change, modify or improve the design of the product without assuming any obligations or liabilities relating to any product previously manufactured by Banner Engineering Corp. Any misuse, abuse, or improper application or installation of this product or use of the product for personal protection applications when the product is identified as not intended for such purposes will void the product warranty. Any modifications to this product without prior express approval by Banner Engineering Corp will void the product warranties. All specifications published in this document are subject to change; Banner reserves the right to modify product specifications or update documentation at any time. Specifications and product information in English supersede that which is provided in any other language. For the most recent version of any documentation, refer to: www.bannerengineering.com.

© 2025 Banner Engineering Corp. All rights reserved.

Exporting Sure Cross® Radios. It is our intent to fully comply with all national and regional regulations regarding radio frequency emissions. Customers who want to re-export this product to a country other than that to which it was sold must ensure the device is approved in the destination country. A list of approved countries appears in the Radio Certifications section of the product manual. The Sure Cross wireless products were certified for use in these countries using the antenna that ships with the product. When using other antennas, verify you are not exceeding the transmit power levels allowed by local governing agencies. Consult with Banner Engineering Corp. if the destination country is not on this list.