REVISION HISTORY			
REV	DESCRIPTION	DATE	APPROVED

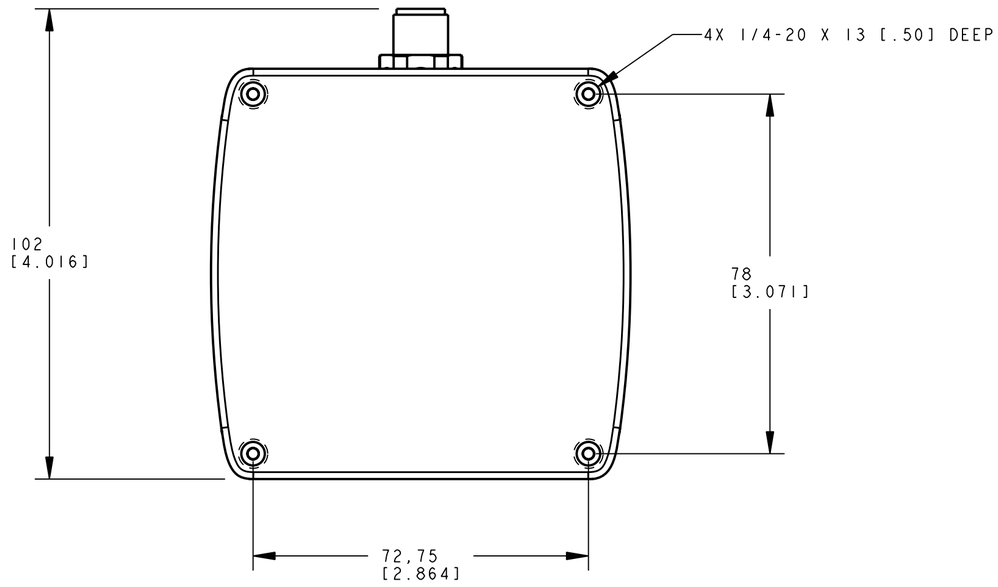

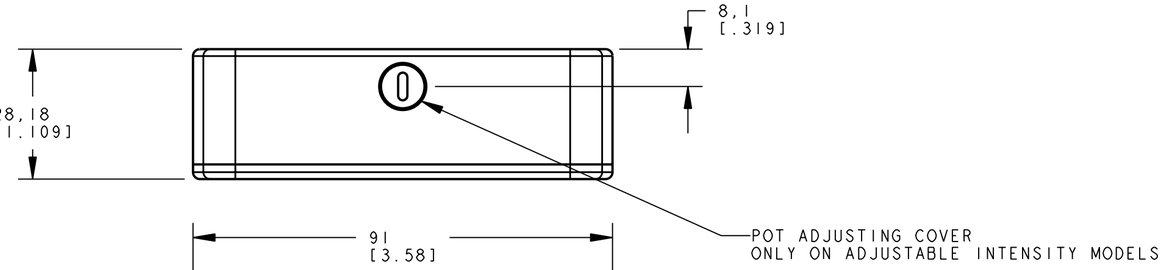

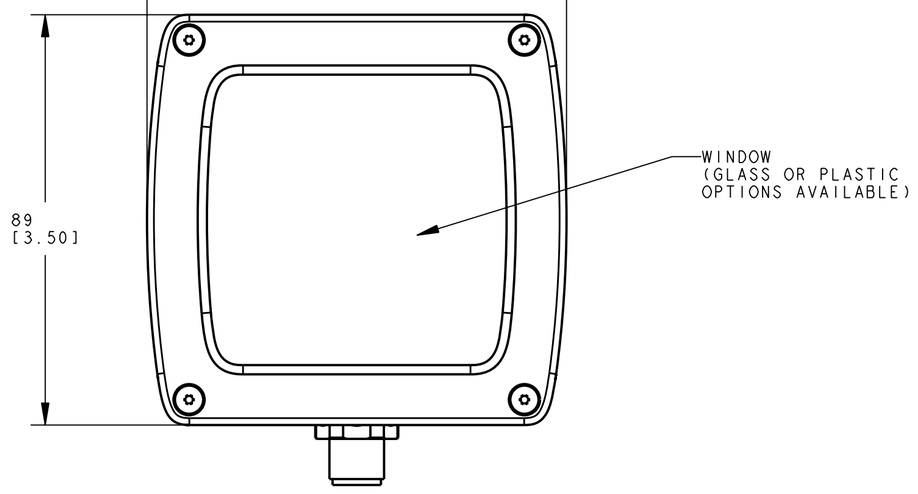

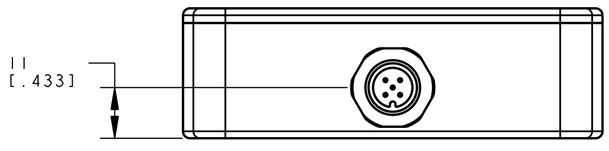

DIMENSIONS ARE IN INCHES UNLESS OTHERWISE SPECIFIED
TOLERANCE ON ANGLE: ±3°
.X ±.02
.XX ±.01
.XXX ±.005
INTERPRET DIMENSIONS & TOLERANCES PER ASME Y14.5M - 1994

THIRD ANGLE PROJECTION

This drawing is the property of BANNER ENGINEERING CORP. and is proprietary in general and in detail. Its contents shall not be revealed to outside parties without written consent of BANNER.

DRAWN BY	DATE
APPROVED BY	DATE
APPROVED BY	DATE

ALL SHEETS ARE THE SAME REVISION STATUS

BANNER ENGINEERING CORP.
P.O. BOX 9414
MINNEAPOLIS, MN 55440

TITLE
LED_A70___4-__
WEB CAD DRAWINGS 2D/3D

SIZE	DRAWING NO.	REV.
C	144929	1
SCALE 1:1	SHEET 1 OF 1	

PRO/E

ПРОМЭЛЕКТРОНИКА/ sales@prom-elec.com