Features

No revision without agency approval.

To view or download the latest technical information about this product, including specifications, dimensions, accessories, and wiring, go to www.bannerengineering.com.



- Designed for use with approved amplifiers and intrinsically safe barriers in explosive environments
- Very high excess gain; 350-foot range (standard 10 ms models)
- Fast 1 ms response models (152-foot range) available by special order
- Totally sealed, self-contained, threaded-barrel opposed mode sensor pairs in rugged 30 mm PBT housings
- Highly immune to noise: the best noise immunity of any self-contained emitter/receiver pair
- Internal alignment indicator LED may be viewed either from the side or from the front of the receiver through the lens
- Integral mini-type 3-pin "QD" (quick-disconnect) connector

WARNING:

- **Do not use this device for personnel protection**
- Using this device for personnel protection could result in serious injury or death.
- This device does not include the self-checking redundant circuitry necessary to allow its use in personnel safety applications. A device failure or malfunction can cause either an energized (on) or de-energized (off) output condition.

Models

Response Time		Models		
		Frequency "A" (standard)	**Frequency "B" (special order)**	**Frequency "C" (special order)**
Models with 10 ms response time		**Repeatability: 1 ms**	**Repeatability: 1.6 ms**	**Repeatability: 2.3 ms**
	Emitters	SMI306EQ	SMI306EBQ	SMI306ECQ
	Receivers (light operate)	SMI30AN6RQ	SMI30AN6RBQ	SMI30AN6RCQ
	Receivers (dark operate)	SMI30RN6RQ		
Models with 1 ms response time		**Repeatability: 360 µs**		**Repeatability: 210 µs**
	Emitters	SMI306EYQ		SMI306EYCQ
	Receivers (light operate)	SMI30AN6RYQ		SMI30AN6RYCQ
	Receivers (dark operate)	SMI30RN6RYQ		

The following models are no longer available for order but are still covered by the information in this document.

- SMI30RN6RBQ (dark operate receiver, 1.6 ms repeatability)

Overview

Banner SMI30 Series intrinsically safe barrel sensors are extremely rugged and powerful opposed mode infrared sensor pairs designed for the most demanding industrial applications. Their high excess gain (350 foot range) provides enough sensing power to penetrate the heaviest contamination (see Excess Gain Curve). Electronics are fully epoxy-encapsulated for maximum resistance to mechanical shock and vibration. Positive sealing at both ends, with no exposed epoxy interfaces, eliminates all leak paths (including capillary leakage). Construction exceeds NEMA 6P (IEC IP 67) standards. Sensors are approximately 1.2 inches in diameter by 4 inches long. SMI30 series dc receivers operate from 10 to 30 V dc.

SMI30 Series sensors are certified as being intrinsically safe when used with approved intrinsic safety barriers. SMI30 Series sensors are suitable for intrinsically safe use in hazardous locations as listed in the Approvals table (see "SMI30 Specifications" on page 4). SMI30 Series sensors are also certified as non-incendive devices when used in Class I, Division 2, Groups A, B, C, and D locations without intrinsic safety barriers.

SMI30 Series sensors may be wired for either two- or three-wire current-sinking operation. In the three-wire hookup, which requires two intrinsic-safety barriers (or one dual barrier), the sink current is 15 mA. The two-wire hookup, which requires one barrier, sinks ≤ 10 mA (OFF state) and ≥ 20 mA (ON state).

Intrinsic safety barriers and current trip point amplifier model CI3RC2 are also available (see "Accessories" on page 6).

Original Instructions
09-Jul-26

© Banner Engineering Corp. All rights reserved.
www.bannerengineering.com

35331
p/n: 35331 Rev. L

ПРОМЭЛЕКТРОНИКА/ sales@prom-elec.com

SMI30 Series receivers have a red LED alignment indicator that lights whenever the receiver "sees" its modulated light source. Emitters have a red LED to indicate "power on". All LED indicators are mounted internally to preserve the waterproof integrity of the sensor housing, and are visible from both the side and front of the sensor through the sensor's quad-ring sealed acrylic lens.

The innovative circuitry used in SMI30 Series emitters and receivers provides the best noise immunity of any self-contained opposed mode sensor pair. For applications where optical crosstalk between sensors might be a problem, SMI30 Series emitters and receivers are available with a choice of three modulation frequencies (frequency "A", frequency "B", or frequency "C"). This makes it possible to use high-powered sensor pairs of different frequencies in close proximity to each other without crosstalk. (NOTE: frequency "A" is standard; frequencies "B" and "C" are available by special order. An emitter and its receiver must be of the same modulation frequency.) See the models table for a summary of models.

Each unit is supplied with two hexagonal jam nuts. A 30 mm clearance hole is required for mounting, and mounting bracket models SMB30MM, SMB30S, and SMB30C are available. All models have a built-in standard quick-disconnect ("QD") connector. "QD" models mate with 12-foot long model SMICC-312 or 30-foot long model SMICC-330 mini-type QD cable (sold separately from sensor).

Installation Instructions

SMI30 Ex/HazLoc Applications

WARNING:
- **Explosive Atmospheres/Hazardous Locations**
- It is the user's responsibility to ensure that all local, state, and national laws, rules, codes, or regulations relating to the installation and use of this device in any particular application are satisfied. This device must be installed by a Qualified Person[1], in accordance with this document and applicable regulations.

WARNING:
- **Explosion Hazard**
- Do not disconnect equipment unless the power has been switched off or the area is known to be non-hazardous.

WARNING:
- **Electrostatic Discharge (ESD) Specific Conditions for Safe Use**
- Parts of the enclosure are non-conducting and can generate an ignition-capable level of ESD.
- To reduce the risk of ignition due to electrostatic discharge, avoid contact with the equipment while an explosive atmosphere is present.
- Clean the equipment with only a damp cloth.

Specific Conditions for Use and General Notes:

See Specifications and Wiring Diagrams for important information concerning entity parameters, permissible locations, electrical connections and certifications.

In addition to the warning above concerning user responsibility, the installation must comply with the following:
- All installations must comply with all manufacturer's instructions.
- U.S. Installations: The relevant requirements of the National Electrical Code® (ANSI/NFPA-70 (NEC®) and when appropriate ANSI/ISA-RP12.06.01 Installation of Intrinsically Safe Systems for Hazardous (Classified) Locations.
- Canadian Installations: The relevant requirements of the Canadian Electrical Code (CSA C22.1).
- ATEX and IECEx Installations: The relevant requirements of EN IEC 60079-14 and applicable National regulations.
- For quick disconnect (QD) models only: Use Banner **SMICC9-3##** cordsets (see "Accessories" on page 6) or suitable quick disconnect cordsets with threaded retaining nut (see Specifications). The cordset must be securely fastened using the QD retaining nut to prevent disconnection.

Do not attempt any repairs to this device; it contains no field-replaceable parts or components. Tampering and/or replacement with non-factory components may adversely affect the safe use of the system.

Barrier entity parameters must meet the following requirements:
- V_{oc} or $V_t \leq V_{max}$
- $C_a \geq C_i + C_{cable}$
- I_{sc} or $I_t \leq I_{max}$
- $La \geq L_i + L_{cable}$

If barriers with Volt/Ohm parameters are used, the following parameters shall apply:

[1] A Qualified Person is a person who, by possession of a recognized degree or certificate of professional training, or who, by extensive knowledge, training and experience, has successfully demonstrated the ability to solve problems relating to the subject matter and work.

© Banner Engineering Corp. All rights reserved.

- One Single-Channel Barrier Systems—one 28 V (max), 300 Ω (min)
- Two Single-Channel Barrier or One Dual-Channel Systems
    - two 28 V (max), 600 Ω (min)
    - one 28 V (max), 300 Ω (min) and one 10 V (max), 50 Ω (min)
    - one 28 V (max), 300 Ω (min) and one 28 V diode return

Sensor Entity Parameters

- V_{max} (Ui) ≤ 30 V DC
- I_{max} (Ii) ≤ 350 mA
- P_i ≤ 750 mW
- C_i = 0 µF
- L_i = 0 mH

The ambient operating temperature range of the sensors is –40 °C to +70 °C (–40 °F to +158 °F).

The sensors are suitable for installation without barriers in Class I Div. 2 Groups A, B, C, D; Class II Div. 2 Group G; and Class III Div. 2, when installed in (or through the wall of) a suitable enclosure with provision for connection of rigid metal conduit per the National Electrical Code, as acceptable to the local inspection authority having jurisdiction. In Div. 2 installations (without barriers), observe Explosion Hazard warning at the beginning of this section.

The sensors are suitable for installation without barriers in Class I Div. 2 Groups A, B, C, D when installed in (or through the wall of) a suitable enclosure with provision for connection of rigid metal conduit per the Canadian Electrical Code, as acceptable to the local inspection authority having jurisdiction. In Div. 2 installations (without barriers), observe Explosion Hazard warning at the beginning of this section.

Maximum non-hazardous area voltage that the Intrinsically safe barrier is connected to must not exceed 250 V.

Control (Installation) Drawing p/n 35392 has been replaced by this document.

Wiring

The SMI30 Series sensor is intrinsically safe ONLY when used with certified energy-limiting intrinsically safe barriers. Banner does not manufacture such barriers; however, our applications engineers can refer you to suppliers of certified barriers that will interface with Banner sensors. SMI30 Series sensors may be wired using Banner Current Amplifier Control Module CI3RC2. Note from the wiring diagrams that the installation may be made with either a single barrier (2-wire hookup) or with a double barrier (3-wire hookup). Emitter-only units (SMI30EQD, ESRQD, and EFQD) use the 2-wire hookup; all other models use either 2- or 3-wire hookup.

In the 2-wire configuration, the sensor will act as a current sink, drawing less than 10 mA in the OFF state and more than 20 mA in the ON state. The user must provide a current sensing device (“current sensor” in the diagram) to convert the current to a logic level. In the 3-wire configuration, the output may be used directly to control loads of less than 15 mA.

In selecting the barrier, it is important to consider the barrier's resistance. The sensor must have at least 10 volts across the brown and blue power leads for proper operation, and the barrier will cause a voltage drop due to its resistance. The formula that determines how much resistance is allowed is: **R = 40 (supply voltage – 10 volts)**.

If the supply voltage is 24 V dc, then the maximum resistance is 560 ohms. If the supply voltage is 18 V dc, then the maximum resistance is 320 ohms. This includes the resistance of any current sensing device used (in the 2-wire configuration), so the barrier resistance must be further reduced by the current sensor resistance.

Note that, in the 3-wire hookup, the positive load barrier is in series with the load. This will result in an apparent saturation voltage of the output that is higher than the sensor output by the amount of I × R (current times resistance) drop through the barrier.

A “positive input” barrier is required for both supply and for load. The sensor’s blue (negative supply) lead is normally connected to the ground terminal of the barrier.

The user is responsible for proper installation and maintenance of this equipment, and must conform with the certification requirements relating to barriers and to maximum allowable capacitance and inductance of the field wiring. If in doubt about these requirements, our applications engineers can refer you to the appropriate authority.

© Banner Engineering Corp. All rights reserved.

Wiring for 3-Wire Connections

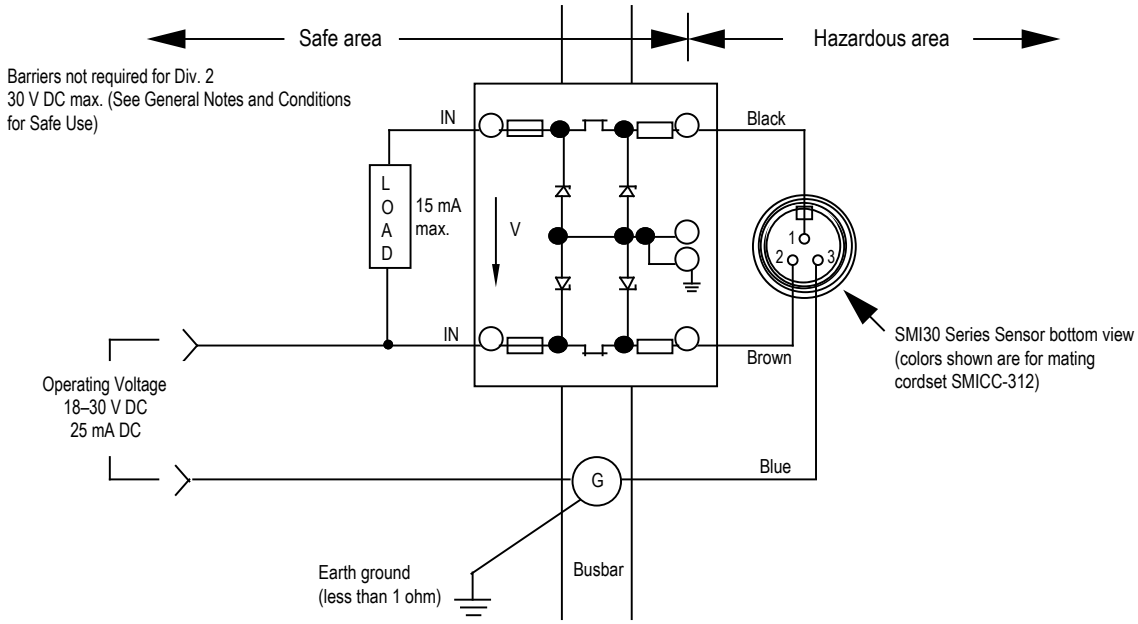

Note: Emitters have no output connection (no connection to black wire)

Wiring for 2-Wire Connections

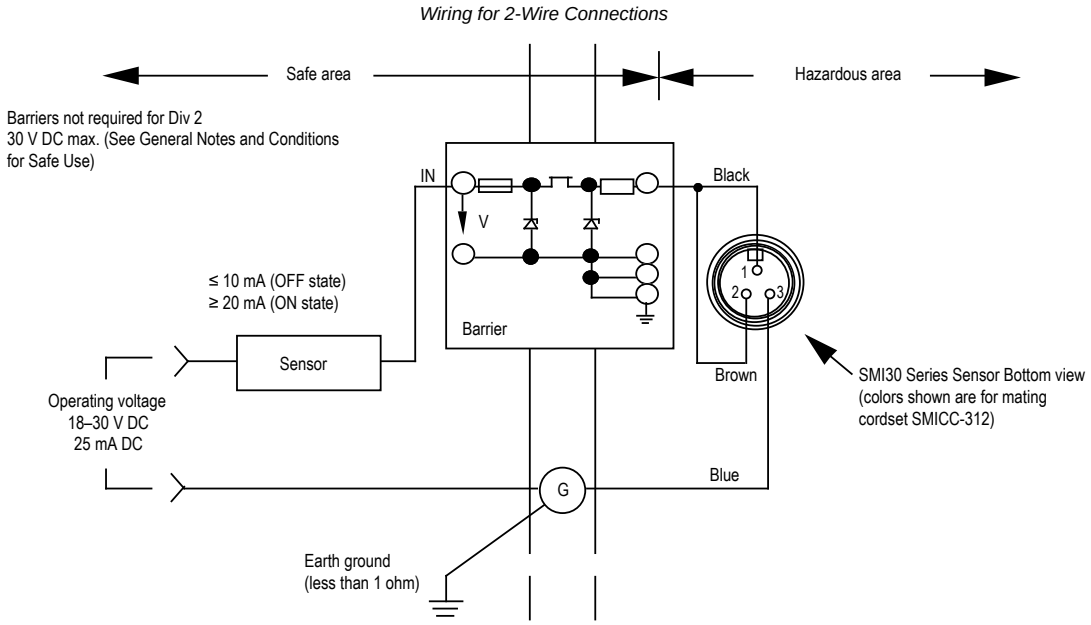

Specifications

Supply Voltage and Current

Emitters: 10 to 30 V DC at 25 mA

Receivers: 10 to 30 V DC at 15 mA maximum Division 1 use, with barriers, requires minimum system supply voltage of 10 V. See Wiring.

Sensing Beam

880 nanometers, infrared; effective beam size 0.75 inch diameter

Indicator

Internal red LED lights whenever the receiver sees its modulated light source. Emitters have red "power on" indicator LED. All indicators are visible through the lens or from side of the sensor.

Mounting Alternatives

30 mm clearance hole

SMB30C split clamp mounting bracket; SMB30MM two-axis mounting bracket; SMB30S swivel mounting bracket. See "APG30S Aperture Kit" on page 7

© Banner Engineering Corp. All rights reserved.
www.bannerengineering.com

Cable

Three-wire 7/8 in-16UNF QD cable (12 ft. long model SMICC-312 or 30 ft. long model SMICC-330)

Cable electrical properties: 40 pf/ft.; 0.20 µH/ft

Order cable separately from sensor

Application Note

Special Conditions for Safe Use: Parts of the enclosure are non-conducting and may generate an ignition-capable level of ESD. Cleaning of the equipment must be done only with a damp cloth

Output Rating

Receivers only: Current sinking NPN open-collector transistor. Three-wire hookup sinks 15 mA maximum continuous, 10 to 30 V DC. Two-wire hookup sinks ≤10 mA (OFF state) and ≥20 mA (ON state), 10 to 30 V DC. Outputs are short-circuit protected.

Response Time

10 milliseconds on/off (models with 1 ms response are available by special order)

Certifications

2809

Banner Engineering BV Park Lane | Culliganlaan 2F bus 3 | 1831 Diegem, BELGIUM

Repeatability

See excess gain curve. Response Time and Repeatability specifications are independent of signal strength.

Operating Temperature

–40 °C to +70 °C (–40 °F to +158 °F)

Construction

Banner tested to NEMA 6P, IEC IP67

30 mm diameter tubular threaded PBT housing, positive sealing at both ends; quad-ring sealed acrylic lens. Electronics are fully epoxy encapsulated. Two PBT jam nuts are provided.

Connections

Connecting 3-pin 7/8 in-16UNF QD Cordsets (see "Cordsets" on page 7): Female single-ended

Multiconductor cable (at minimum): UL Style 2517, 22 AWG wire, rated ≥ 80 °C

MINI QD connector: must have threaded 7/8-16UNF retaining nut

FM APPROVED

IEC IECEx FMG 14.0029X

ATEX FM12ATEX0094X

FM CoC 0003046293 (US)

FM CoC 0003046293C (CAN)

Design Standards	
ATEX (European)	EN IEC 60079-0, EN 60079-11
Canada	CAN/CSA C22.2: No.0-M91, No.142-M1987, No.157-92, No.213-M1987, No.1010.1, E60079-0 and E60079-11
United States	FM Class 3600, 3610, and 3810; ANSI/ISA 61010-1 (82.02.01), 60079-0 and 60079-11
IECEx	IEC 60079-0, IEC 60079-11

Approvals	
SMI30(a)	a = 6EQ, 6EBQ, 6ECQ, 6EYCQ, AN6RQ, AN6RBQ, AN6RCQ, RN6RQ, RN6RBQ, RN6RCQ, 6EYQ, AN6RYQ, AN6RYCQ, RN6RYQ, RN6RYCQ.
ATEX (European)	II 2 G Ex ib IIC T5 Gb Ta = –40°C to 70°C - 35331; Entity Entity Parameters: U_i = 30 V, I_i = 350 mA, P_i = 750 mW, C_i = 0, L_i = 0.
Canadian	I / 1 / Ex ib / IIC / T5 Ta = –40°C to 70°C - 35331; Entity CL I, Zn 1 Ex ib IIC T5 -40°C ≤ Ta ≤ +70°C; Entity 35331 (Non-incendive) NI / I,II,III / 2 / ABCDG / T5 Entity Parameters: V_{Max} = 30 V, I_{Max} = 350 mA, P_i = 750 mW, C_i = 0, L_i = 0.
United States	I / 1 / AEx ib / IIC / T5 Ta = –40°C to 70°C - 35331; Entity CL I, Zn 1 AEx ib IIC T5 Gb -40°C ≤ Ta ≤ +70°C; Entity 35331 (Non-incendive) NI / I,II,III / 2 / ABCDG / T5 Ta = -40°C to 70°C Entity Parameters: V_{Max} = 30 V, I_{Max} = 350 mA, P_i = 750 mW, C_i = 0, L_i = 0.
IECEx	Ex ib IIC T5 Gb Ta = –40 °C to +70 °C - 35331; Entity Entity Parameters: V_{Max} = 30 V, I_{Max} = 350 mA, C_i = 0, L_i = 0



© Banner Engineering Corp. All rights reserved.
www.bannerengineering.com

Performance Curves

Beam Pattern (10 ms Response Time)	Beam Pattern (1 ms Response Time)	Excess Gain Curve
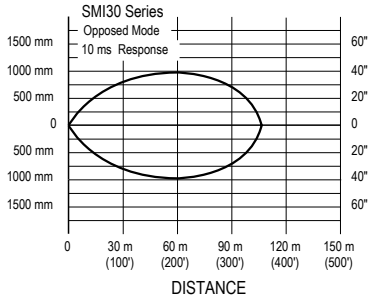	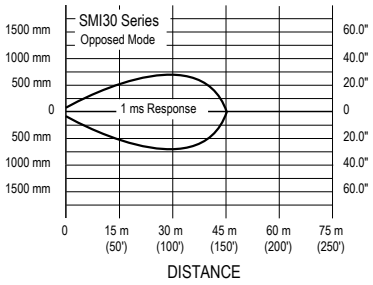	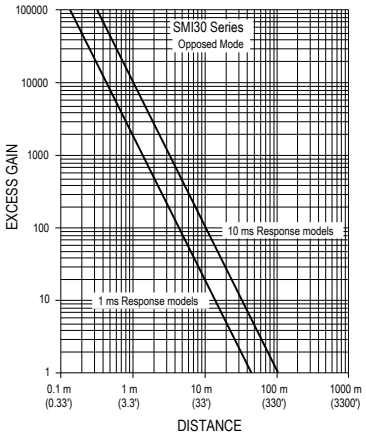

Dimensions

All measurements are listed in millimeters [inches], unless noted otherwise. The measurements provided are subject to change. Connector not shown.

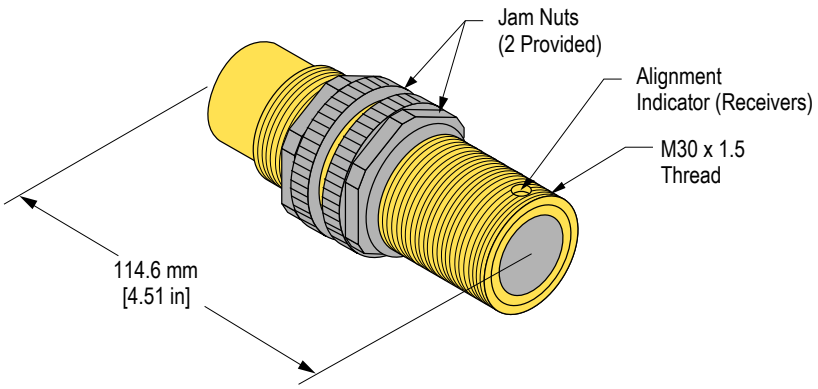

Accessories

Brackets

SMB30C

- 30 mm split clamp, black PBT bracket
- Stainless steel mounting hardware included
- Mounting hole for 30 mm sensor
- CAD Files: DXF, PDF, IGS, STP

Hole center spacing: A=ø 45
Hole size: B=ø 27.2

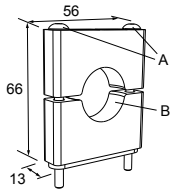

SMB30MM

- 12-gauge stainless steel bracket with curved mounting slots for versatile orientation
- Clearance for M6 (¼ in) hardware
- Mounting hole for 30 mm sensor
- CAD Files: DXF, PDF, IGS, STP

Hole center spacing: A=51, A to B=25.4
Hole size: A=42.6 × 7, B=ø 6.4, C=ø 30.1

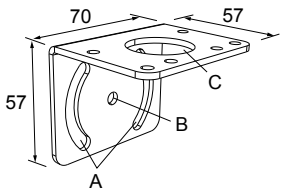

© Banner Engineering Corp. All rights reserved.
www.bannerengineering.com

SMB30S

- Swivel bracket with 30 mm mounting hole for sensor
- Adjustable captive swivel ball
- Black reinforced thermoplastic polyester
- Stainless steel mounting and swivel locking hardware included
- CAD Files: DXF, PDF, IGS, STP

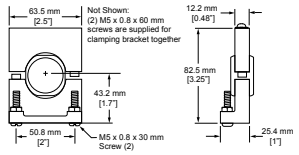

Special Conditions for Safe Use. Parts of the enclosure are non-conducting and may generate an ignition-capable level of ESD. Clean the equipment with a damp cloth only.

APG30S Aperture Kit

These new water-tight apertures for SM30 Series sensors may be used to size and shape the effective beam or to limit excess gain for avoiding "burn-through" effects. Apertures are sold as a kit, which includes a thread-on stainless steel housing, a flat glass lens, two quad-ring seals, and 3 round and 3 slotted aperture disks.

The stainless steel aperture housing functions equally well with VALOX® and stainless steel sensor models. The glass lens is useful for protecting the SM30's acrylic lens against substances that are hostile to acrylics, such as concentrated acids and alkalis and industrial solvents.

Aperture sizes include the following:

- Round: .06", .12", and .70" diameter
- Slotted: .04", .10", and .20" wide

APG30S

Kit includes black acetal round apertures of 0.05 in, 0.12 in, and 0.70 in diameter; slotted widths of 1 mm (0.04 in), 2.5 mm (0.10 in), and 5 mm (0.20 in.)

Used with SM30 and SMI30 models.



Cordsets

3-pin Single-Ended Threaded Mini Female Cordsets for Intrinsically Safe Sensors				
Model	**Length**	**Style**	**Dimensions (mm)**	**Pinout (Female)**
SMICC-306	2 m (6.56 ft)	Straight	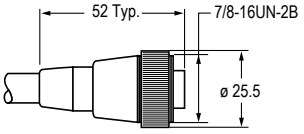	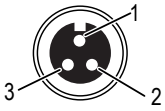
SMICC-312	4 m (13.12 ft)			
SMICC-330	10 m (32.81 ft)			

1 = Black
2 = Brown
3 = Blue

Intrinsic Safety Barriers

Model (Barrier Only)	Barrier Description	Kit Model	Kit Description
CIB-1	Single-channel intrinsically safe barrier	**CI2BK-1**	Includes CI3RC2 current amplifier, one RS-11 socket, one DIN-rail mount, one single-channel intrinsically safe barrier
CI2B-1	Dual-channel intrinsically safe barrier (typically used in opposed-mode applications)	**CI2BK-2**	Includes CI3RC2 current amplifier, one RS-11 socket, one DIN-rail mount, one dual-channel intrinsically safe barrier

MAXI-AMP CI3RC2 Current Amplifier Module

Banner MAXI-AMP module model CI3RC2 (part number 36606) is a self-contained module that converts the current output signal of an SMI30 Series sensor to a trip point switch.

© Banner Engineering Corp. All rights reserved.
www.bannerengineering.com

Hookup Using Two Single-Channel Barriers

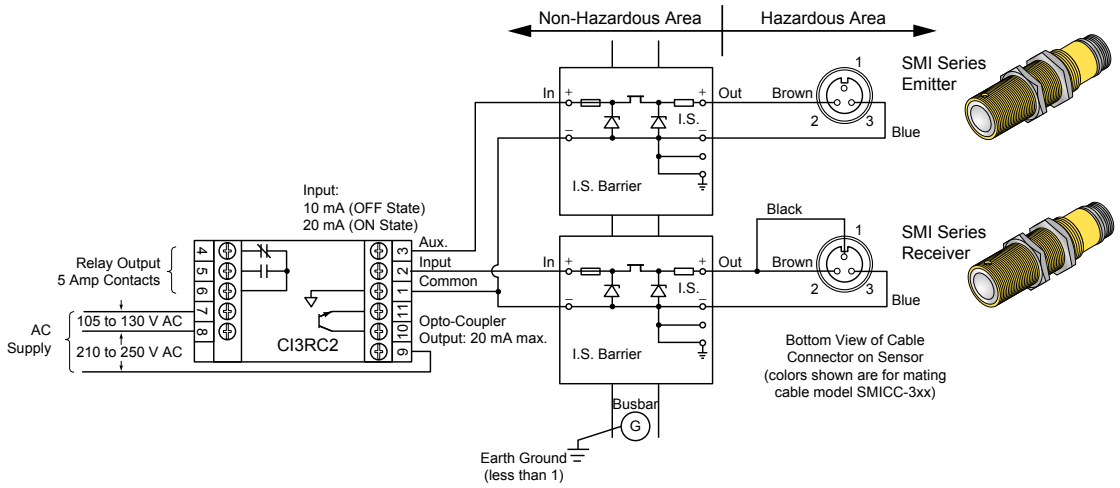

Hookup Using One Dual-Channel Barrier

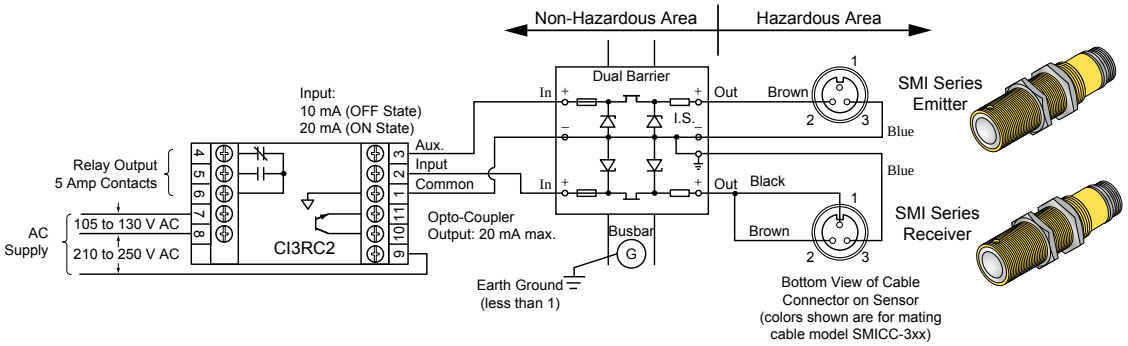

Both sensors of the opposed mode pair are wired to model CI3RC2 using the two-wire hookup, which requires the use of two single-channel or one dual-channel intrinsic safety barrier(s). In this mode, the SMI30 receiver sinks less than or equal to 10 milliamps in the "OFF" state and greater than or equal to 20 milliamps in the "ON" state. The CI3RC2 senses this current change and switches internal relays that are easily wired to most loads and/or additional control circuitry.

Model CI3RC2 is powered by either 105 to 130 or 210 to 250 V AC. The CI3RC2 supplies power to operate both the emitter and receiver.

Inputs are protected against short circuits. Built-in circuit diagnostics indicate an overload of either input by pulsing an LED status light.

The CI3RC2 module has two isolated output switches. There is a 5 amp rated SPDT electromechanical relay, and a solid-state transistor switch which may be used for logic-level interfaces. For more information, refer to the datasheet packed with the CI3RC2.

CI3RC2 Specifications - General

Supply Voltage

105 to 130 or 210 to 250 V ac, 50/60 Hz (8 VA)

Indicator LEDs

Status indicator for OUTPUT "ON" and INPUT overload/short.

Operating Temperature

0 °C to +50 °C (+32 °F to +122 °F)

Inputs

Trip point for output "OFF": ≤ 10 milliamps

Trip point for output "ON": ≥ 20 milliamps

Trip point range for input overload indication: 30 mA ≤ I ≤ 80 mA

Construction

Rugged NORYL® polyphenylene oxide (PPO™) housing, 1.6" × 2.3" × 4". Standard round-pin 11-pole base. Use RS-11 socket or equivalent.

CI3RC2 Specifications - Output Configuration

SPDT Electromechanical Relay

Contact rating: 250 V AC max., 24 V DC max.., 5 amps max. (resistive load), 1/10 HP at 240 V AC. Install transient suppressor (MOV) across contacts that switch inductive loads.

Closure time: 10 milliseconds max.

Release time: 10 milliseconds max.

Maximum switching speed: 20 operations/second

Mechanical life: 20,000,000 operations

Solid-State DC Relay

SPST optically-coupled transistor

30 V DC max., 20 mA max

© Banner Engineering Corp. All rights reserved.
www.bannerengineering.com

Repairs and Translations-MASTER

Obtain assistance with product repairs by contacting your local Banner Engineering Corp distributor or by calling Banner directly at (763) 544-3164. Access literature translated into your native language on the Banner website at www.bannerengineering.com or contact Banner directly at (763) 544-3164.

Unterstützung bei Produktreparaturen erhalten Sie von Ihrem örtlichen Banner Engineering Corp Händler oder direkt von Banner unter Tel. (763) 544-3164. Die in Ihre Muttersprache übersetzte Literatur finden Sie auf der Banner-Website unter www.bannerengineering.com oder kontaktieren Sie Banner direkt unter Tel. (763) 544-3164.

Pour vous aider lors de la réparation de produits, contactez votre distributeur Banner local our appelez directement Banner au (763) 544-3164. La documentation traduite dans votre langue est disponible sur le site internet de Banner www.bannerengineering.com ou contactez directement Banner au (763) 544-3164.

Per assistenza nelle riparazioni dei prodotti, contattare il distributore locale Banner Engineering Corp o contattare direttamente Banner al numero (763) 544-3164. È possibile accedere alla documentazione tradotta nella propria lingua madre sul sito Web Banner all'indirizzo www.bannerengineering.com o contattare direttamente Banner al numero (763) 544-3164.

Para reparaciones de productos, por favor contacte a su distribuidor local de Banner Engineering o llame a Banner directamente al 00 1 (763) 544-3164. Vea la literatura traducida en su idioma en el sitio web Banner en www.bannerengineering.com o comuníquese con Banner directamente al 00 1 (763) 544-3164.

请联系当地的 Banner Engineering Corp 经销商或直接致电 Banner +1 (763) 544-3164，以获得产品维修帮助。请访问邦纳网站 www.bannerengineering.com 或直接拨打 +1 (763) 544-3164 联系邦纳，获取翻译成您母语的资料。

제품 수리에 대한 지원은 지역 Banner Engineering Corp 대리점에 문의하거나 Banner에 직접 (763) 544-3164로 문의하실 수 있습니다. 사용자의 모국어로 번역된 자료는 Banner 웹사이트 www.bannerengineering.com에서 액세스하거나 Banner에 직접 (763) 544-3164로 문의하실 수 있습니다.

製品の修理については、最寄りのBanner Engineering Corp代理店にお問い合わせいただくか、米国+1 (763) 544-3164まで直接お電話でお問い合わせください。バナーのウェブサイト（www.bannerengineering.com）でお客様の言語に翻訳された資料にアクセスするか、米国+1 (763) 544-3164まで直接お電話でお問い合わせください。

Pokud produkt potřebuje opravu, vyžádejte si pomoc od místního distributora společnosti Banner Engineering Corp nebo přímo na telefonním čísle (763) 544-3164. Dokumentaci přeloženou do vašeho jazyka si vyhledejte na webových stránkách společnosti Banner na adrese www.bannerengineering.com nebo se obraťte přímo na společnost Banner na telefonním čísle (763) 544-3164.

Aby uzyskać pomoc w zakresie naprawy produktu, należy skontaktować się z lokalnym dystrybutorem Banner Engineering Corp lub zadzwonić bezpośrednio do firmy Banner pod numer (763) 544-3164. Dostęp do literatury przetłumaczonej na swój język ojczysty można uzyskać na stronie internetowej firmy Banner pod adresem www.bannerengineering.com lub kontaktując się bezpośrednio z firmą Banner pod numerem (763) 544-3164.

Obtenha assistência para reparos do produto entrando em contato com o distribuidor local da Banner Engineering Corp ou ligando diretamente para a Banner no telefone (763) 544-3164. Acesse a literatura traduzida para seu idioma nativo no site da Banner em www.bannerengineering.com ou entre em contato diretamente com a Banner pelo telefone (763) 544-3164.

Yerel Banner Engineering Corp distribütörünüzle iletişime geçerek veya doğrudan (763) 544-3164 numaralı telefondan Banner'ı arayarak ürün onarımlarıyla ilgili yardım alın. Ana dilinize çevrilmiş dokümanlara www.bannerengineering.com adresindeki Banner web sitesinden erişebilir veya (763) 544-3164 numaralı telefondan doğrudan Banner ile iletişime geçebilirsiniz.

Banner Engineering Corp Limited Warranty

Banner Engineering Corp. warrants its products to be free from defects in material and workmanship for one year following the date of shipment. Banner Engineering Corp. will repair or replace, free of charge, any product of its manufacture which, at the time it is returned to the factory, is found to have been defective during the warranty period. This warranty does not cover damage or liability for misuse, abuse, or the improper application or installation of the Banner product.

THIS LIMITED WARRANTY IS EXCLUSIVE AND IN LIEU OF ALL OTHER WARRANTIES WHETHER EXPRESS OR IMPLIED (INCLUDING, WITHOUT LIMITATION, ANY WARRANTY OF MERCHANTABILITY OR FITNESS FOR A PARTICULAR PURPOSE), AND WHETHER ARISING UNDER COURSE OF PERFORMANCE, COURSE OF DEALING OR TRADE USAGE.

This Warranty is exclusive and limited to repair or, at the discretion of Banner Engineering Corp., replacement. **IN NO EVENT SHALL BANNER ENGINEERING CORP. BE LIABLE TO BUYER OR ANY OTHER PERSON OR ENTITY FOR ANY EXTRA COSTS, EXPENSES, LOSSES, LOSS OF PROFITS, OR ANY INCIDENTAL, CONSEQUENTIAL OR SPECIAL DAMAGES RESULTING FROM ANY PRODUCT DEFECT OR FROM THE USE OR INABILITY TO USE THE PRODUCT, WHETHER ARISING IN CONTRACT OR WARRANTY, STATUTE, TORT, STRICT LIABILITY, NEGLIGENCE, OR OTHERWISE.**

Banner Engineering Corp. reserves the right to change, modify or improve the design of the product without assuming any obligations or liabilities relating to any product previously manufactured by Banner Engineering Corp. Any misuse, abuse, or improper application or installation of this product or use of the product for personal protection applications when the product is identified as not intended for such purposes will void the product warranty. Any modifications to this product without prior express approval by Banner Engineering Corp will void the product warranties. All specifications published in this document are subject to change; Banner reserves the right to modify product specifications or update documentation at any time. Specifications and product information in English supersede that which is provided in any other language. For the most recent version of any documentation, refer to: www.bannerengineering.com.

For patent information, see www.bannerengineering.com/patents.

© Banner Engineering Corp. All rights reserved.
www.bannerengineering.com