# MINI-BEAM® Plastic Fiber Optic Sensors (Suffix FP1)

## Installation Instructions

*Fiber Installation Instructions for FP1-suffix Plastic Fiber Optic Models*

## Fiber Installation for FP1 Clamp-Style Sensor Fiber Grips

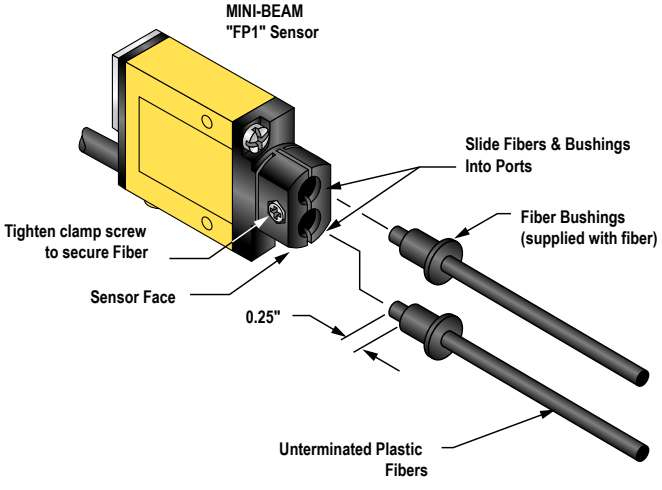


1. If using a bifurcated fiber, separate the two halves of the control end of the fiber for a distance of 51 mm (2 in) (minimum).
2. Thread the control ends of the fiber through the bushings (supplied with the fiber) until they extend through about 6 mm (0.25 in).
3. Slide the fibers with the bushings into the ports on the face of the MINI-BEAM until the fibers stop.
4. Slide the bushings further into the ports until they seat up against the face of the MINI-BEAM.
5. Hold the fibers and bushings in place.
6. While holding the fibers and bushings against the face of the MINI-BEAM, tighten the clamp screw to secure the fibers and bushings in place.

**WARNING:**

- **Do not use this device for personnel protection**
- Using this device for personnel protection could result in serious injury or death.
- This device does not include the self-checking redundant circuitry necessary to allow its use in personnel safety applications. A device failure or malfunction can cause either an energized (on) or de-energized (off) output condition.

## Dimensions

All measurements are listed in millimeters [inches], unless noted otherwise.

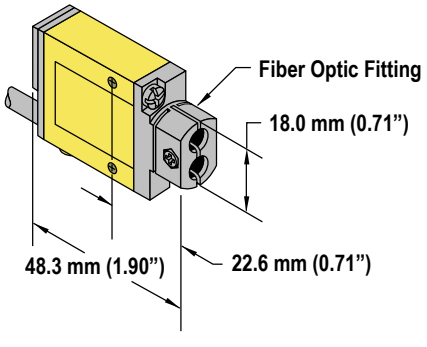


Original Document
61308 Rev. C

10 May 2019

61308

ПРОМЭЛЕКТРОНИКА/ sales@prom-elec.com

# Banner Engineering Corp. Limited Warranty

Banner Engineering Corp. warrants its products to be free from defects in material and workmanship for one year following the date of shipment. Banner Engineering Corp. will repair or replace, free of charge, any product of its manufacture which, at the time it is returned to the factory, is found to have been defective during the warranty period. This warranty does not cover damage or liability for misuse, abuse, or the improper application or installation of the Banner product.

**THIS LIMITED WARRANTY IS EXCLUSIVE AND IN LIEU OF ALL OTHER WARRANTIES WHETHER EXPRESS OR IMPLIED (INCLUDING, WITHOUT LIMITATION, ANY WARRANTY OF MERCHANTABILITY OR FITNESS FOR A PARTICULAR PURPOSE), AND WHETHER ARISING UNDER COURSE OF PERFORMANCE, COURSE OF DEALING OR TRADE USAGE.**

This Warranty is exclusive and limited to repair or, at the discretion of Banner Engineering Corp., replacement. **IN NO EVENT SHALL BANNER ENGINEERING CORP. BE LIABLE TO BUYER OR ANY OTHER PERSON OR ENTITY FOR ANY EXTRA COSTS, EXPENSES, LOSSES, LOSS OF PROFITS, OR ANY INCIDENTAL, CONSEQUENTIAL OR SPECIAL DAMAGES RESULTING FROM ANY PRODUCT DEFECT OR FROM THE USE OR INABILITY TO USE THE PRODUCT, WHETHER ARISING IN CONTRACT OR WARRANTY, STATUTE, TORT, STRICT LIABILITY, NEGLIGENCE, OR OTHERWISE.**

Banner Engineering Corp. reserves the right to change, modify or improve the design of the product without assuming any obligations or liabilities relating to any product previously manufactured by Banner Engineering Corp. Any misuse, abuse, or improper application or installation of this product or use of the product for personal protection applications when the product is identified as not intended for such purposes will void the product warranty. Any modifications to this product without prior express approval by Banner Engineering Corp will void the product warranties. All specifications published in this document are subject to change; Banner reserves the right to modify product specifications or update documentation at any time. Specifications and product information in English supersede that which is provided in any other language. For the most recent version of any documentation, refer to: *www.bannerengineering.com*.

For patent information, see *www.bannerengineering.com/patents*.



© Banner Engineering Corp. All rights reserved