MINI-ARRAY® BASIC Two-Piece Measuring Light Curtain

Instruction Manual

Original Instructions
220750 Rev. B
25 October 2021
© Banner Engineering Corp. All rights reserved

220750

ПРОМЭЛЕКТРОНИКА/ sales@prom-elec.com

Contents

1 Product Description 3
1.1 Models 3
2 System Overview 4
2.1 System Features 4
2.2 Easy-to-Understand Diagnostic LEDs 5
2.3 Two Solid-State Outputs 6
2.4 EIA-485 Interface 6
2.5 Sensing Scan Time 6
2.6 Supplied System Software 6
2.7 System Self-Diagnostics 6
2.8 Marginal Alignment/Dirty Lens Detection 7
2.9 Fault Detection and Sensor Degradation Operation 7
3 Installation 8
3.1 Emitter and Receiver Mounting 8
3.2 Emitter and Receiver Wiring 9
3.3 Optically Align the Components 10
4 Auto Streaming Control 11
5 Specifications 12
5.1 Emitter and Receiver Mounting Dimensions 12
6 Accessories 14
6.1 Cordsets 14
6.2 Anti-Vibration Mounting Kits 14
6.3 Mounting Bracket Kit (Optional) 15
7 Product Support and Maintenance 16
7.1 Troubleshooting 16
7.2 Contact Us 16
7.3 Banner Engineering Corp Limited Warranty 16

1 Product Description

MINI-ARRAY BASIC Two-Piece Measuring Light Curtain configured for material handling and logistics applications with auto-stream serial output, two discrete outputs, and EIA-485 communication

- Simple two-piece measuring light curtain for profiling and object detection, tailored for material handling and logistics applications
- Diagnostic LEDs provide a simple means of monitoring emitter and receiver conditions and diminished performance from dirty lenses
- Models available with array lengths from 150 mm (6 in) to 1210 mm (4.7 ft) in 150 mm (6 in) increments
- Beam spacing 19.1 mm (0.75 in) and a maximum range of 2 meters
- Two discrete outputs plus auto-stream EIA-485 serial communication that automatically streams data without a command
- Configurable via the EIA-485 serial interface and the Banner Sensors GUI software within 5 seconds after the power supply starts
- Alarm output signals dirty lens and system fault conditions
- EIA-485 serial communication enables a computer to process scan data

WARNING:
- **Do not use this device for personnel protection**
- Using this device for personnel protection could result in serious injury or death.
- This device does not include the self-checking redundant circuitry necessary to allow its use in personnel safety applications. A device failure or malfunction can cause either an energized (on) or de-energized (off) output condition.

1.1 Models

Emitter Model	Receiver Model	Array Length (Y)	Overall Length	Total Beams	Sensor Scan Time (ms)	
					Interlaced Scan	Straight Scan [1]
MBE616Q Emitter	**MBR616PX485SQ**	143 mm (5.62 in)	251 mm (9.9 in)	8	1.4	0.9
MBE1216Q Emitter	**MBR1216PX485SQ**	295 mm (11.62 in)	403 mm (15.9 in)	16	2.5	1.5
MBE1816Q Emitter	**MBR1816PX485SQ**	448 mm (17.62 in)	555 mm (21.9 in)	24	3.6	2.0
MBE2416Q Emitter	**MBR2416PX485SQ**	600 mm (23.62 in)	708 mm (27.9 in)	32	4.8	2.6
MBE3016Q Emitter	**MBR3016PX485SQ**	752 mm (29.62 in)	860 mm (33.9 in)	40	5.9	3.2
MBE3616Q Emitter	**MBR3616PX485SQ**	905 mm (35.62 in)	1013 mm (39.9 in)	48	7.0	3.7
MBE4216Q Emitter	**MBR4216PX485SQ**	1057 mm (41.62 in)	1165 mm (45.9 in)	56	8.1	4.3
MBE4816Q Emitter	**MBR4816PX485SQ**	1210 mm (47.62 in)	1318 mm (51.9 in)	64	9.2	4.8

The receiver's two discrete outputs are set to PNP by default, but can also be configured to NPN.

[1] Worst-case response time is twice the scan time.

2 System Overview

The Banner MINI-ARRAY Basic Two-Piece Measuring Light Curtain is customized for material handling and logistics applications. It incorporates the popular two-stick MINI-ARRAY emitter and receiver design and ease of use, while simplifying installation. This two-piece system does not require a separate controller.



A typical system consists of four components:

- Emitter
- Receiver
- Two interconnecting cables

Models are available in array lengths from 150 mm (6 in) to 1210 mm (4.7 ft) in 150 mm(6 in) increments. Beam spacing is 19.1 mm (0.75 inch). Sensing range is 2 m (6.5 feet).

2.1 System Features

Built-in features simplify the operation of the MINI-ARRAY Basic Two-Piece Measuring Light Curtain system, which is customized to specifically address the demanding requirements needed to be used in the material handling and logistic environments for high-speed detection.

The system has an auto-stream serial output feature (see Auto Streaming Control on p. 11). By default, this automatically sends FBB (First Beam Blocked) and TBB (Total Beams Blocked) measurement data over the EIA-485 interface. The system is pre-configured for a straight scan optical pattern where each emitter channel fires only at its opposing receiver element (see Figure 2 on p. 5).

The system can also be configured for an interlaced optical pattern. An interlaced sensor scan involves individually enabling each emitter channel twice. In effect, each emitter channel fires at both its opposing receiver element, and at the one beneath it. The result is an interlaced optical detection pattern (see Figure 3 on p. 5). This pattern can better detect objects within the middle third of the sensing area.

Several important features have been built into the MINI-ARRAY Basic system:

- Easy-to-understand diagnostic LEDs
- Two discrete outputs
- EIA-485 serial communication
- Self-diagnostics to detect dirty lens and faulty or degraded sensor operation conditions

Figure 1. System features

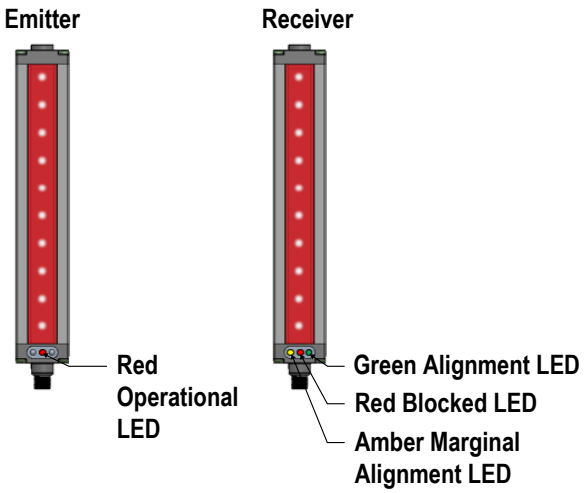

Figure 2. Straight scan

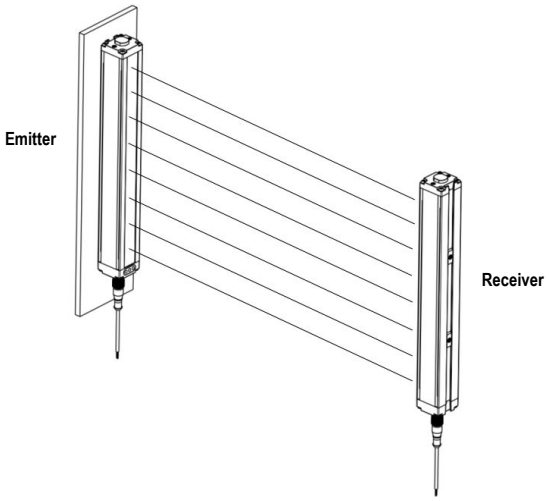

Figure 3. Interlaced scan

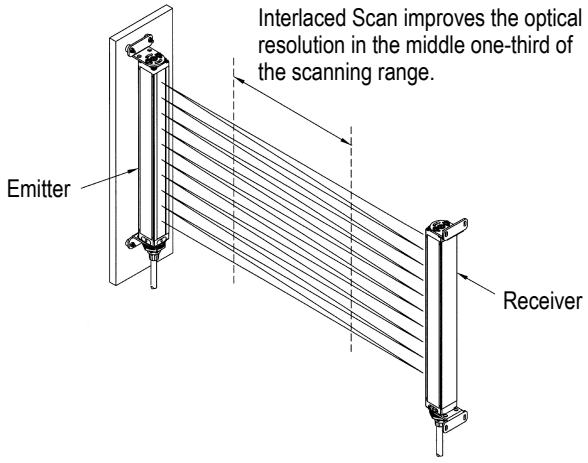

2.2 Easy-to-Understand Diagnostic LEDs

The system provides simple, straightforward indications of sensor performance. See Troubleshooting on p. 16 for a more detailed guide to troubleshooting system status using the diagnostic LEDs.

Table 1: Emitter: 1 Red Diagnostic LED

LED Condition	ON Solid	OFF	Flashing (5x per second)	Flashing (1x per second)
Red	Sensor is functioning normally	No power to emitter	Receiver is removed from the system	One or more emitter optical channel(s) not working properly

Table 2: Receiver: 3 Diagnostic LEDs (Green, Red, and Amber)

The combined status of the Green and Red LEDs provides a simple sensor alignment process. The Amber LED signals a dirty lens or degraded sensor condition.

LED Condition	ON Solid	OFF	Flashing (2 Hz)
Green	Light curtain is unobstructed	Light curtain is obstructed	Non-functioning emitter

LED Condition	ON Solid	OFF	Flashing (2 Hz)
Red	Light curtain is obstructed	Light curtain is unobstructed	Non-functioning emitter
Amber	Dirty lens (whether the light curtain is blocked or clear); remains ON until the receiver detects proper light signal strength	n/a	Light signal of one of more beam(s) is degraded

2.3 Two Solid-State Outputs

The receiver has two discrete outputs (Output #1 and Output #2). Each output is independent and can be configured for either NPN or PNP operation. The sensor is factory-configured for PNP outputs. These outputs are rated to 150 mA and are short circuit protected.

2.4 EIA-485 Interface

The receiver has a serial EIA-485 interface to provide sensor measurements. By default, the MINI-ARRAY Basic will auto stream FBB (First Beam Blocked) and TBB (Total Beams Blocked). This can be modified using the Banner Sensor Configuration Software.

2.5 Sensing Scan Time

Scan time is a function of the sensor length (total number of beams considered) and the scan mode (interlaced or straight scan). See Models on p. 3.

2.6 Supplied System Software

The device's configuration can be modified by connecting to the Banner Sensor Configuration Software via an appropriate EIA-485 interface (consult a Banner Engineering representative for more information). Settings include measurement mode, discrete output configuration, scan type, blanking and more. The software also enables the user to check sensor alignment, obtain sensor readings, and verify sensor status.

After the desired configuration has been written to the receiver, the receiver stores the settings in non-volatile memory.

Note: Connect the sensor to the Sensor Configuration Software within 5 seconds after making a proper connection to an active power supply. If the sensor is not connected to the configuration software within 5 seconds after applying power, the sensor goes into auto stream mode.

2.7 System Self-Diagnostics

Output #2 can be configured for Alarm/Health Status using Banner's Sensor Configuration Software. This enables advanced electronic and signal processing to allow the receiver to continually monitor and evaluate light signal quality and alert the user to light signal degradation or sensor faults. The sensor can detect marginal alignment, permanently blocked channels, a faulty emitter element, or a non-functioning emitter.

The receiver was designed to detect system failures and remain operational. Potential problems include a dirty lens that completely blocks the optical light signal or a light signal failure (caused by either the emitter or receiver). Although sensor failures are rare, the Two-Piece MINI-ARRAY Basic is designed to continue to function while warning the user of fault conditions. This minimizes system down time and provides advanced notice that system maintenance or repairs are required.

Whenever the receiver detects proper operation, Output #2 is active (ON, a healthy condition). When the sensor detects a system problem (either a sensor fault or a degraded signal), Output #2 is inactive (turns OFF, an alarm condition).

A system problem is acknowledged in two ways:

1. The condition of the diagnostic LEDs.
2. Output #2 is inactive (OFF), when Output #2 is configured for Alarm/Health Status.

2.8 Marginal Alignment/Dirty Lens Detection

When the received light signal drops below a predetermined threshold, the receiver recognizes a marginal alignment or dirty lens condition. The dirty lens threshold is equivalent to three times the minimum light signal necessary for detection.

After this condition is detected, the receiver alerts the user that the lens surface should be cleaned or re-aligned. The amber diagnostic LED turns on until the condition is no longer detected (whether the light curtain is blocked or clear). This advance recognition can be used to initiate a proper maintenance process. When Output #2 is configured for Alarm/Health Status, Output #2 is inactive (off).

2.9 Fault Detection and Sensor Degradation Operation

If the receiver detects a permanently blocked channel, such as from a failed LED in the emitter, the amber diagnostic LED flashes at 2 Hz and the device enters Sensor Degradation mode. If Output #2 is configured for Alarm/Health Status, Output #2 is inactive (OFF).

After the receiver detects a permanently blocked optical channel, the receiver effectively ignores the degraded optical channel while continuing to operate. This allows the sensor to continue working and, for many instances, provide reliable service and advanced notice of a fault.

Emitter faults: The receiver can detect a non-functioning emitter (possibly caused by a disconnected cable). The receiver's green and red diagnostic LEDs flash at 2 Hz to signal this emitter condition.

3 Installation

3.1 Emitter and Receiver Mounting

Banner MINI-ARRAY BASIC emitters and receivers are small, lightweight, and easy to mount. Two M6 × 1 T-nuts are included for mounting, which are assembled in the housing. The mounting brackets are optional for mounting and allow ± 30 degrees rotation.

From a common point of reference, make measurements to position the emitter and receiver in the same plane with their midpoints directly opposite each other. Mount the emitter and receiver T-nuts using the M6 screw and washer.

Although the internal circuitry of the emitter and receiver can withstand heavy impulse forces, vibration isolators can be used to dampen impulse forces and prevent possible damage from resonant vibration of the emitter or receiver assembly. Two different Anti-Vibration Mounting Kits are available from Banner. See Accessories on p. 14.

Figure 4. MINI-ARRAY emitter and receiver mounting hardware

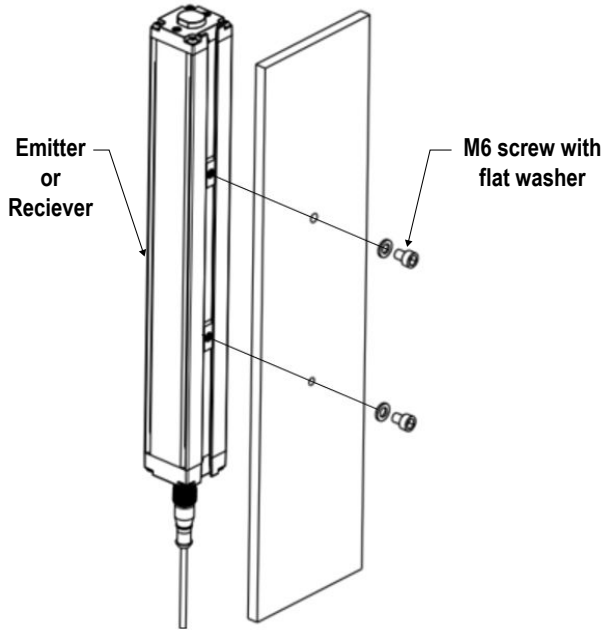

1. Mount the emitter and receiver in their mounting T-nuts (see Figure 4 on p. 8).
2. Position the red lenses of the two units directly facing each other. The connector ends of both sensors must point in the same direction.
3. Measure from one or more reference planes (such as the floor) to the same points on the emitter and receiver to verify their mechanical alignment. If the sensors are positioned exactly vertical or exactly horizontal, a carpenter's level may be useful for checking alignment. Extending a straight-edge or a string between the sensors may help with positioning.
4. Also check by eye for line-of-sight alignment.
5. Make any necessary final mechanical adjustments, and hand-tighten the bracket hardware.
6. Prepare the two integral 8-pin M12 male quick disconnect cables.
7. Connect the shielded cables to the emitter and receiver. Follow the local wiring code for low-voltage DC control cables. The same cable type is used for both emitter and receiver (two cables required per system).
8. Route the cables to the terminal location.

3.2 Emitter and Receiver Wiring

Connect the emitter and receiver cables as shown.

Figure 5. NPN Wiring Diagram

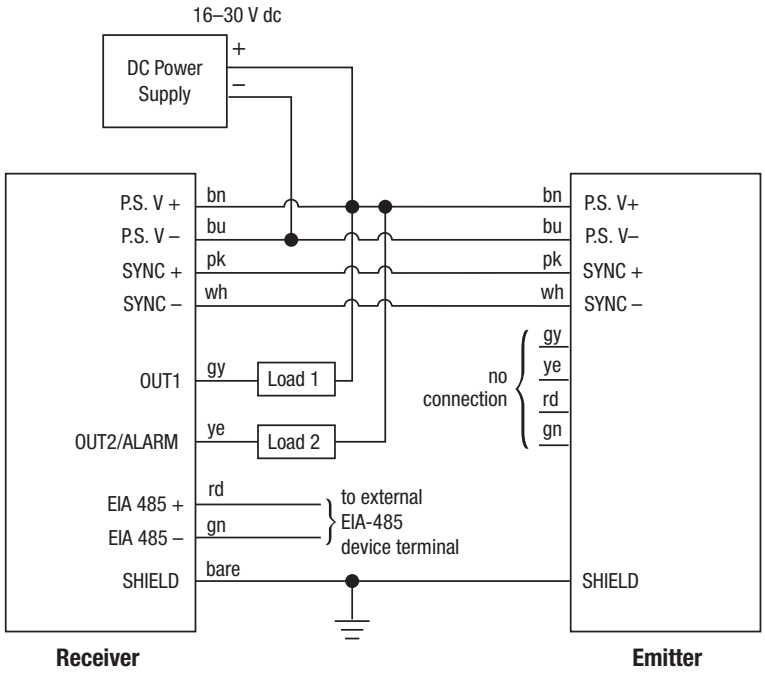

Figure 6. PNP Wiring Diagram

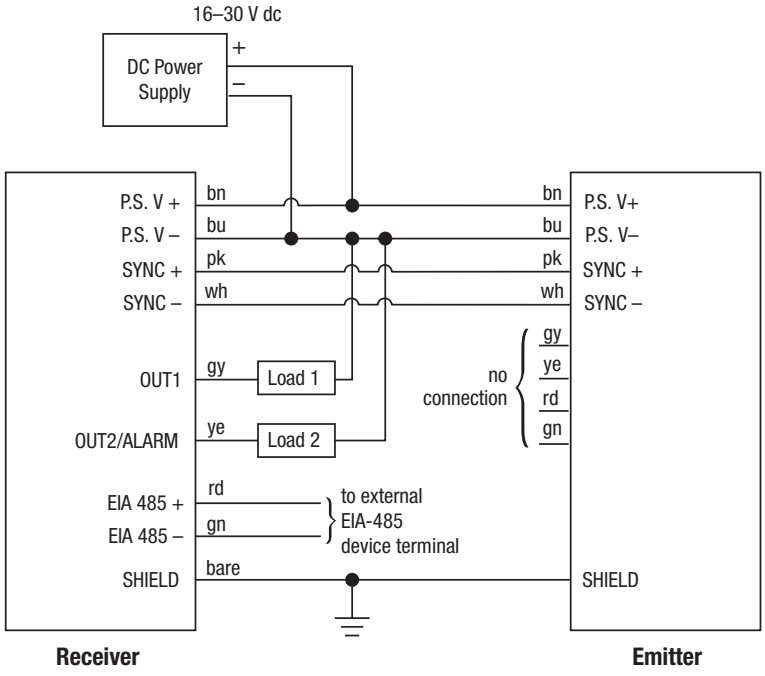

Receiver Output 1: (OUT1) is an open-collector transistor switch rated at 30 V DC maximum, 150 mA maximum. It is protected against overload and short circuits.

Receiver Output 2/Alarm: (OUT2/ALARM) is an open-collector transistor switch rated at 30 V DC maximum, 150 mA maximum. It is protected against overload and short circuits.

Both outputs can be configured as NPN (current sinking) or PNP (current sourcing).

3.3 Optically Align the Components

Follow these steps to optically align the light curtain emitter and receiver.

1. Verify the light curtain components are mechanical aligned and the cables are connected.
2. Apply 16 V DC to 30 V DC power to the sensor.
3. Rotate the emitter and/or receiver as necessary to align them.
4. Align the emitter and receiver until the receiver's green LED is on and the amber and red LED are off.

Note: By default, the MINI-ARRAY Basic sets the gain level on power up. If the sticks are properly aligned but have marginal signal, cycle the power to set the gain settings.

4 Auto Streaming Control

The MINI-ARRAY Basic Two-Piece Measuring Light Curtain by default has an auto streaming feature. Auto stream automatically starts streaming data 5 seconds after the device is powered up without the need for a command.

The default measurements that are streamed are First Beam Blocked (FBB) and Total Beams Blocked (TBB). Up to four measurements can be streamed, which can be configured using Banner's Sensor Configuration Software.

If any serial command is sent within the initial 5 seconds, streaming is disabled. To resume streaming, cycle power to the device. After streaming begins, all communications to the sensor fail because of an unavoidable data collision.

BAUD Rate

Default setting: 38400

The default BAUD rate can be changed by using the Banner Sensor Configuration Software.

Auto Stream Serial Protocol

The serial communication follows the this data format:

1. Start of Header: 0xF4
2. Sensor Address: 0x41
3. Command: 0x64
4. Number of Data Bytes: 0x04 in little endian format (LSB first)
5. Data Bytes (4 total)
6. Checksum Low
7. Checksum High

Checksum Calculation

Ones compliment of the sum of the bytes in Auto Stream Serial Protocol, numbers 1 to 5.

Example All Channels Clear: F4.41.64.04.00.00.00.00.62.FE

Example All Channels Blocked: F4.41.64.04.01.00.20.00.41.FE

5 Specifications

Supply Voltage and Power
16 V DC to 30 V DC; maximum power 12 watts

Supply Protection Circuitry
Protected against reverse polarity and transient voltages

Discrete Output Configuration
Two discrete outputs: Output 1 and Output 2
Outputs can be configured as either NPN or PNP (default setting)

Discrete Output (either NPN or PNP) Ratings
Rated at 30 V DC max, 150 mA max load, short circuit protected
OFF-State Leakage Current: < 10 µA at 30 V DC
ON-State Saturation Voltage: < 1 V DC at 10 mA, < 1.5 V DC at 150 mA

Serial Data Outputs
EIA-485 interface
Auto stream default: FBB, TBB
Baud rate 38400 (Adjustable)
8 data bits, 1 start bit, 1 stop bit, no parity

Controller Programming
Via EIA-485 to Banner Sensors GUI software

Emitter/Receiver Range
2 m (6.5 ft)

Minimum Object Sensitivity
Straight Scan Mode: 38.1 mm (1.5 in)
Interlaced Mode: 25.4 mm (1 in)

Sensor Scan Time
Worst-case response time is twice the scan time; see Models on p. 3

Cable Connections
Emitter and receiver with Integral 8-pin M12 male quick disconnect

Status Indicators
See Easy-to-Understand Diagnostic LEDs on p. 5

Environmental Rating
IP54

Construction
Aluminum housing with black anodized finish; acrylic lens cover

Operating Conditions
–40 °C to +70 °C (–40 °F to +158 °F)
95% maximum relative humidity (non-condensing)

Application Notes
The emitter and receiver sync lines (pink and white wires) will be damaged if connected to the power supply
The receiver EIA-485 interface (red and green wires) will be damaged if connected to the power supply

Certifications

5.1 Emitter and Receiver Mounting Dimensions

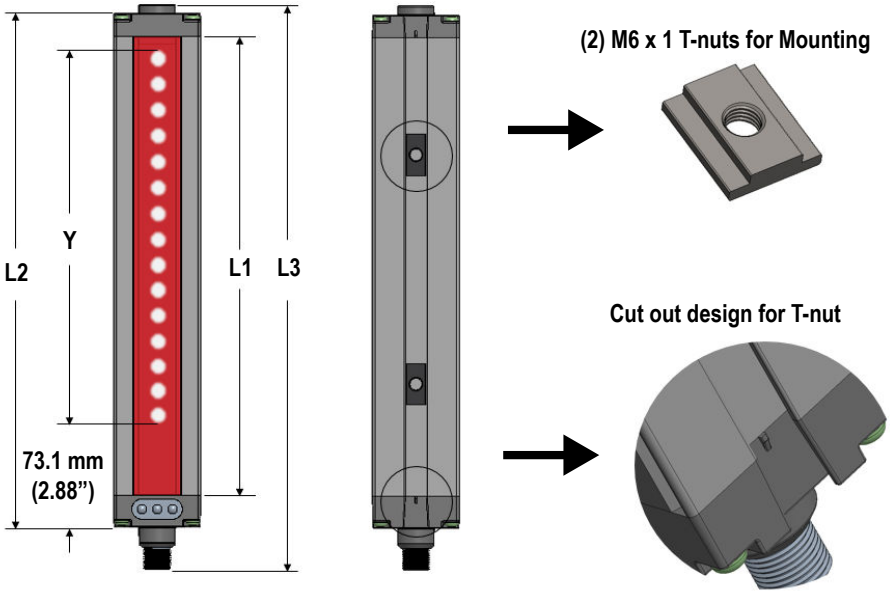

Emitter/Receiver Models	Array Length (Y)	Housing Length (T-Nut active) (L1)	Total Length	
			L2	L3
MBE616Q Emitter **MBR616PX485SQ Receiver**	143 mm (5.62 in)	204 mm (8.0 in)	228 mm (9.0 in)	251 mm (9.9 in)
MBE1216Q Emitter **MBR1216PX485SQ Receiver**	295 mm (11.62 in)	356 mm (14.0 in)	380 mm (15.0 in)	403 mm (15.9 in)

Emitter/Receiver Models	Array Length (Y)	Housing Length (T-Nut active) (L1)	Total Length	
			L2	L3
MBE1816Q Emitter **MBR1816PX485SQ Receiver**	448 mm (17.62 in)	508 mm (20.0 in)	532 mm (21.0 in)	555 mm (21.9 in)
MBE2416Q Emitter **MBR2416PX485SQ Receiver**	600 mm (23.62 in)	661 mm (26.0 in)	685 mm (27.0 in)	708 mm (27.9 in)
MBE3016Q Emitter **MBR3016PX485SQ Receiver**	752 mm (29.62 in)	813 mm (32.0 in)	837 mm (33.0 in)	860 mm (33.9 in)
MBE3616Q Emitter **MBR3616PX485SQ Receiver**	905 mm (35.62 in)	966 mm (38.0 in)	990 mm (39.0 in)	1013 mm (39.9 in)
MBE4216Q Emitter **MBR4216PX485SQ Receiver**	1057 mm (41.62 in)	1118 mm (44.0 in)	1142 mm (45.0 in)	1165 mm (45.9 in)
MBE4816Q Emitter **MBR4816PX485SQ Receiver**	1210 mm (47.62 in)	1271 mm (50.0 in)	1295 mm (51.0 in)	1318 mm (51.9 in)

6 Accessories

6.1 Cordsets

Additional lengths are available.

8-Pin Threaded M12 Cordsets with Shield—Single Ended					
Model	**Length**	**Style**	**Dimensions**	**Pinout (Female)**	
MAQDC-806	2 m (6.56 ft)	Straight	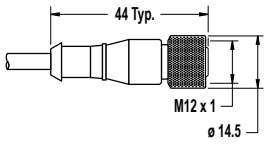	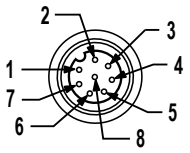	
MAQDC-815	5 m (16.4 ft)				
MAQDC-830	10 m (32.81 ft)				
MAQDC-850	15 m (49.21 ft)			1 = White 2 = Brown 3 = Green 4 = Yellow	5 = Gray 6 = Pink 7 = Blue 8 = Red

6.2 Anti-Vibration Mounting Kits

MSVM-1

- 4 anti-vibration mounts (M4 × 0.7 × 9.5 mm)
- 8 M4 Keps nuts
- These mounts are made from BUNA-N rubber and are more resistant to chemicals and oils.

MAVM-1

- 4 anti-vibration mounts (M4 × 0.7 × 9.5 mm)
- 8 M4 Keps nuts
- These mounts are made from natural rubber, which are less chemically resistant than the MSVM-1 mounts, but have a greater sheer force spec at higher temperature.

6.3 Mounting Bracket Kit (Optional)

Standard packaging does not include brackets. Contact Banner Engineering to order brackets.

Figure 7. Bracket Mounting

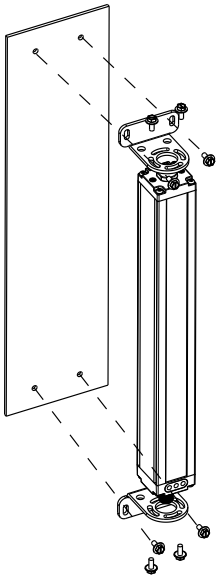

Figure 8. Bracket Dimensions

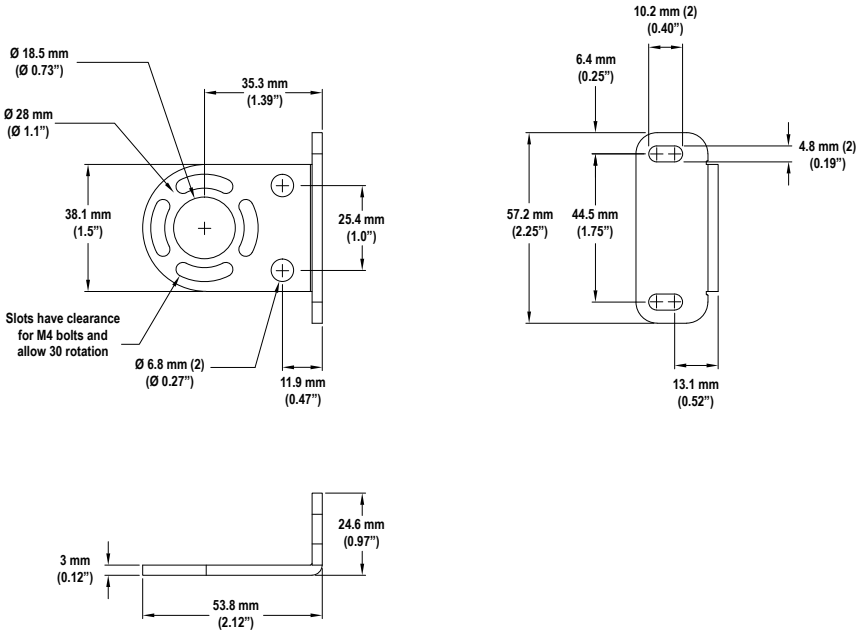

MAB-MBK-EB

- Includes 2 end cap brackets
- Includes 4 screws (M4 x 0.7 x 10 mm) for Mini Array Basic End-cap mounting
- 4 bolts mounting hardware (M4 x 0.7 x 14 mm) for customer
- 4 M4 nuts
- 8 Flat washers
- 8 Split washers

7 Product Support and Maintenance

7.1 Troubleshooting

The emitter has a single red status LED. Use the receiver's three LEDs (green, amber, and red) to diagnose system status.

Receiver LED Condition			System Status	Possible Action
Green	Amber	Red		
ON	OFF	OFF	Emitter/receiver pair aligned	None
ON	ON	OFF	Emitter/receiver pair aligned with dirty lens or marginal signal	Clean lenses; align emitter and receiver
OFF	OFF	ON	Emitter/receiver pair blocked	None
OFF	ON	ON	Emitter/receiver pair blocked with dirty lens or marginal signal	Clean lenses; align emitter and receiver
ON	ON	ON	Receiver error	Replace receiver
ON	Flashing (2 Hz)	OFF	Degraded mode; emitter/receiver pair aligned	Clean lenses; align emitter and receiver
OFF	Flashing (2 Hz)	ON	Degraded mode; emitter/receiver pair blocked	
Flashing (2 Hz)	OFF	Flashing (2 Hz)	Emitter is not functioning	Connect emitter

7.2 Contact Us

Banner Engineering Corp. headquarters is located at:

9714 Tenth Avenue North
Minneapolis, MN 55441, USA
Phone: + 1 888 373 6767

For worldwide locations and local representatives, visit www.bannerengineering.com.

7.3 Banner Engineering Corp Limited Warranty

Banner Engineering Corp. warrants its products to be free from defects in material and workmanship for one year following the date of shipment. Banner Engineering Corp. will repair or replace, free of charge, any product of its manufacture which, at the time it is returned to the factory, is found to have been defective during the warranty period. This warranty does not cover damage or liability for misuse, abuse, or the improper application or installation of the Banner product.

THIS LIMITED WARRANTY IS EXCLUSIVE AND IN LIEU OF ALL OTHER WARRANTIES WHETHER EXPRESS OR IMPLIED (INCLUDING, WITHOUT LIMITATION, ANY WARRANTY OF MERCHANTABILITY OR FITNESS FOR A PARTICULAR PURPOSE), AND WHETHER ARISING UNDER COURSE OF PERFORMANCE, COURSE OF DEALING OR TRADE USAGE.

This Warranty is exclusive and limited to repair or, at the discretion of Banner Engineering Corp., replacement. **IN NO EVENT SHALL BANNER ENGINEERING CORP. BE LIABLE TO BUYER OR ANY OTHER PERSON OR ENTITY FOR ANY EXTRA COSTS, EXPENSES, LOSSES, LOSS OF PROFITS, OR ANY INCIDENTAL, CONSEQUENTIAL OR SPECIAL DAMAGES RESULTING FROM ANY PRODUCT DEFECT OR FROM THE USE OR INABILITY TO USE THE PRODUCT, WHETHER ARISING IN CONTRACT OR WARRANTY, STATUTE, TORT, STRICT LIABILITY, NEGLIGENCE, OR OTHERWISE.**

Banner Engineering Corp. reserves the right to change, modify or improve the design of the product without assuming any obligations or liabilities relating to any product previously manufactured by Banner Engineering Corp. Any misuse, abuse, or improper application or installation of this product or use of the product for personal protection applications when the product is identified as not intended for such purposes will void the product warranty. Any modifications to this product without prior express approval by Banner Engineering Corp will void the product warranties. All specifications published in this document are subject to change; Banner reserves the right to modify product specifications or update documentation at any time. Specifications and product information in English supersede that which is provided in any other language. For the most recent version of any documentation, refer to: www.bannerengineering.com.

For patent information, see www.bannerengineering.com/patents.

[2] If the emitter diagnostic LED is solid red after cleaning the emitter and receiver lenses, consider replacing the receiver.