MODEL NO.	"L"	P/N
PIRIXI66UMPMAL	2000 [79]	71858

*ASSEMBLY CONSISTS OF (1) LEFT AND (1) RIGHT HAND FIBER

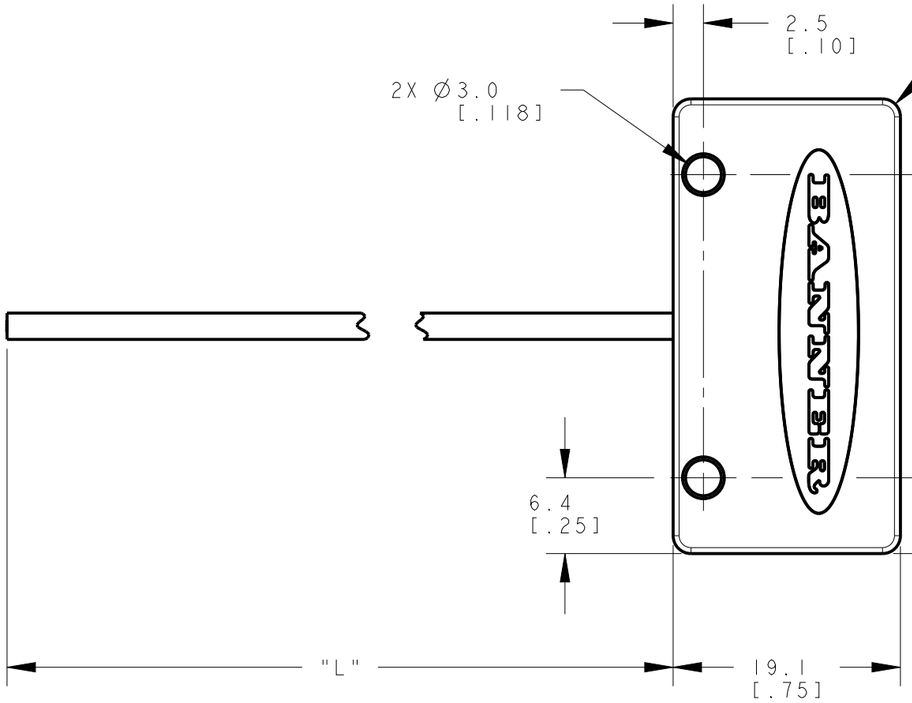

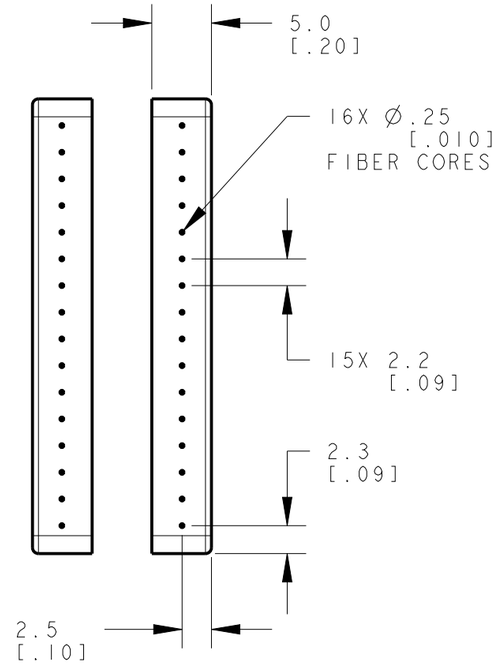

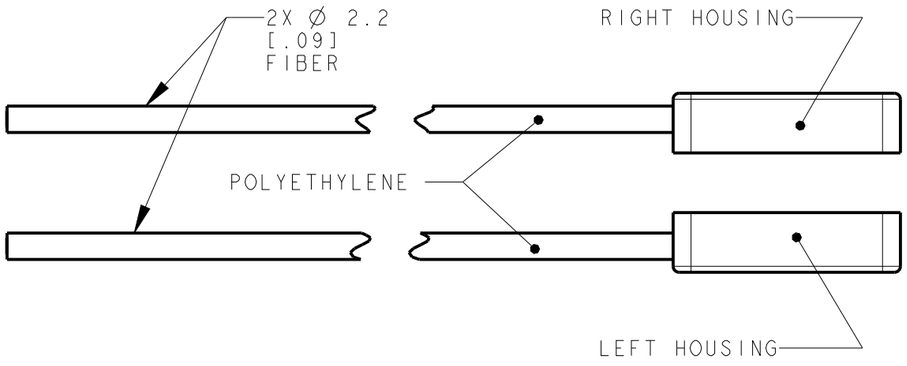

NOTES:
1. ALL DIMENSIONS ARE MILLIMETERS [INCHES] UNLESS OTHERWISE NOTED.
2. REFER TO "www.bannerengineering.com" FOR ADDITIONAL DATA AND SPECIFICATIONS.

This drawing is the property of BANNER ENGINEERING CORP. Any use or reproduction, in any form, without prior written permission of Banner is prohibited.
© 2015 Banner Engineering Corp.

THIRD ANGLE PROJECTION

BANNER ENGINEERING CORP.
www.bannerengineering.com

TITLE

PIRI MPMAL SERIES UNTERMINATED

SIZE	DRAWING NO.	REV.
B	192783	A
SCALE 2:1	SHEET 1 OF 1	

CREO

ПРОМЭЛЕКТРОНИКА/ sales@prom-elec.com