BR1 Series Fibers

BR1xS Series Fibers

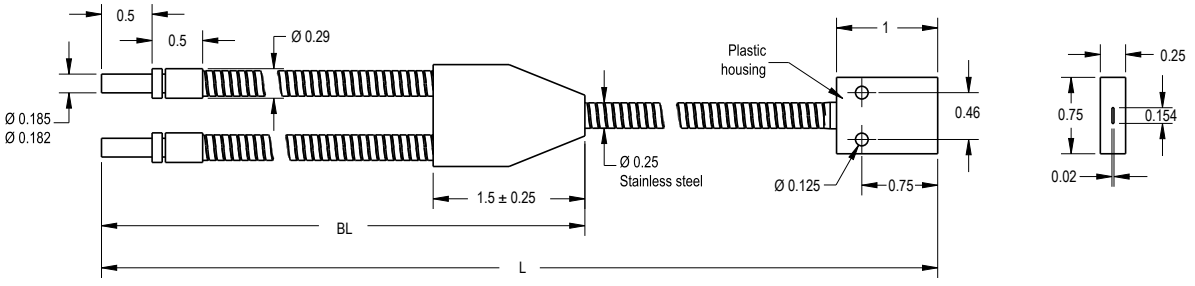

Model	CAD Files	BL (in)	L (in)
BR12S	CAD files: PDF	7.5 ± 0.5	24
BR13S			36

BR1xP Series Fibers

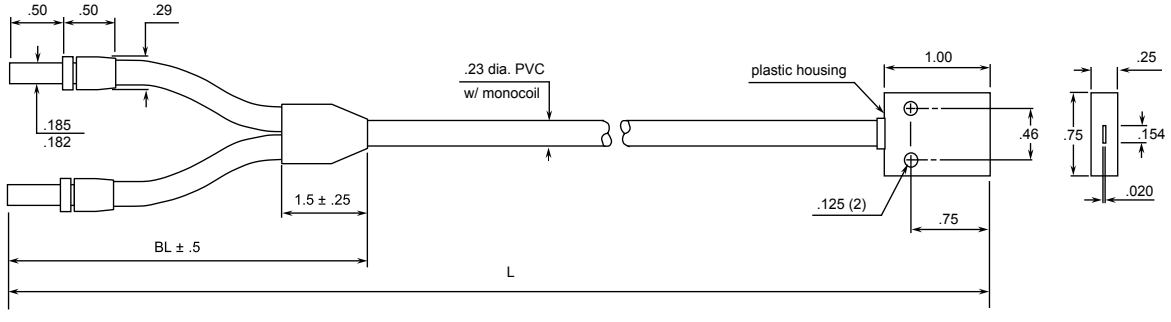

Model	CAD Files	BL (in)	L (in)
BR13P	CAD files: PDF	7.5	36

BR2x Series Fibers

BR2.xS Series Fibers

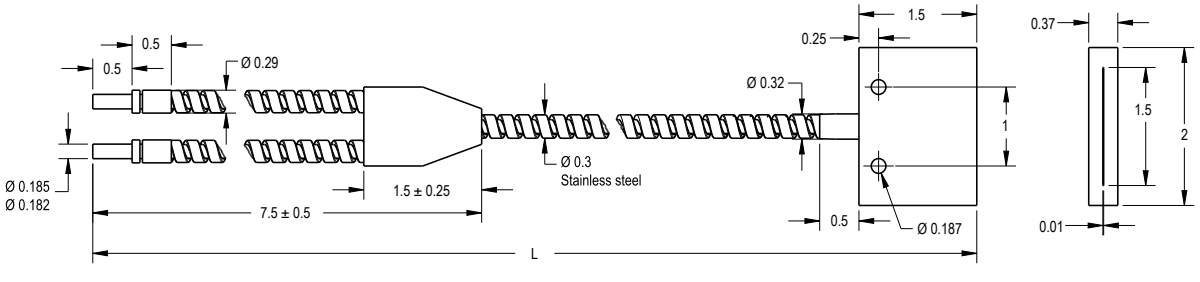

Model	CAD Files	L (in)
BR2.53S	CAD files: DXF, PDF, IGS, STP	36
BR2.56S		72

Original Instructions
13-Feb-26

© Banner Engineering Corp. All rights reserved.
www.bannerengineering.com

b_51965705
p/n: b_51965705 Rev. A

ПРОМЭЛЕКТРОНИКА/ sales@prom-elec.com

BR2xP Series Fibers

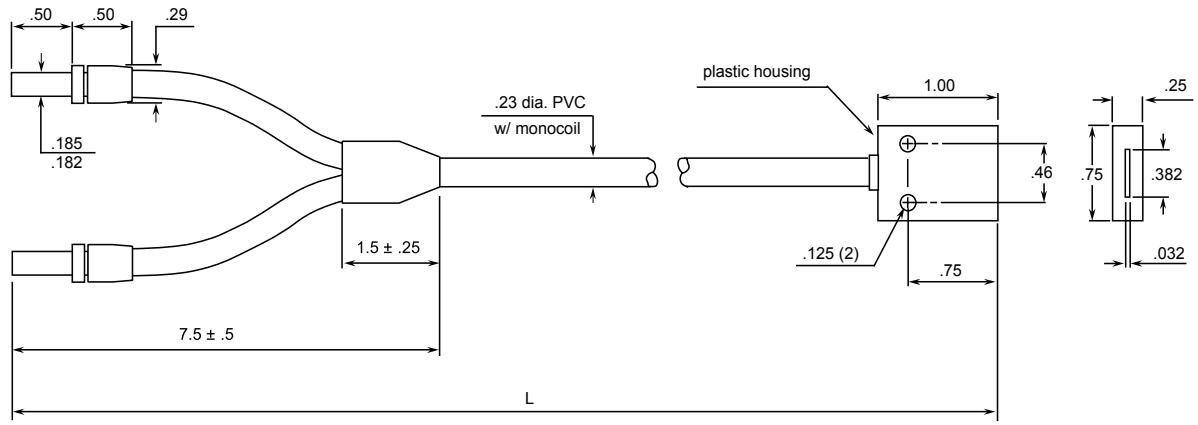

Model	CAD Files	L (in)
BR23P	CAD files: PDF	36
BR26P		72

BR2xS Series Fibers

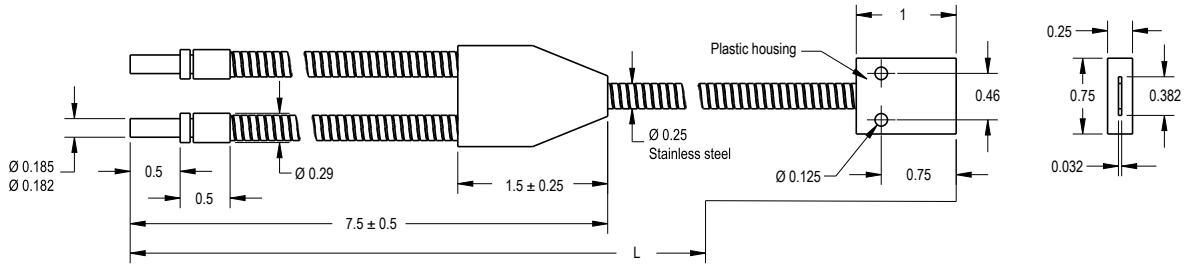

Model	CAD Files	L (in)
BR23S	CAD files: DXF, PDF, IGS, STP	36
BR26S		72

BR23SM0625X.020 Fiber

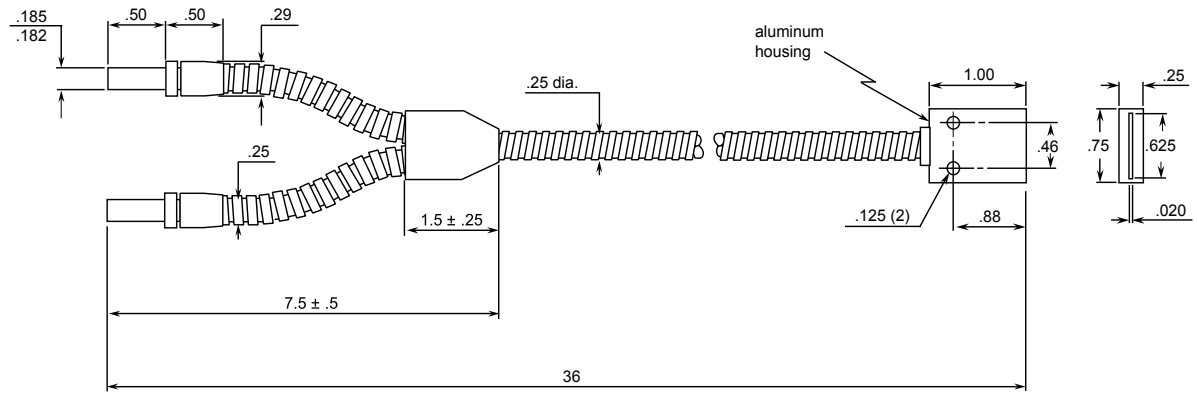

© Banner Engineering Corp. All rights reserved.
www.bannerengineering.com

BR23SMCCE Fiber

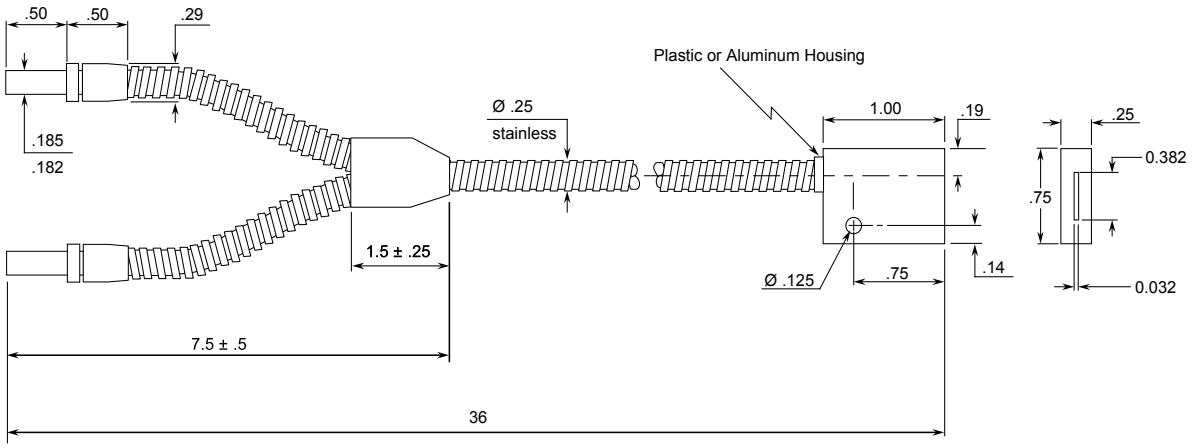

BR23SMRA Fiber

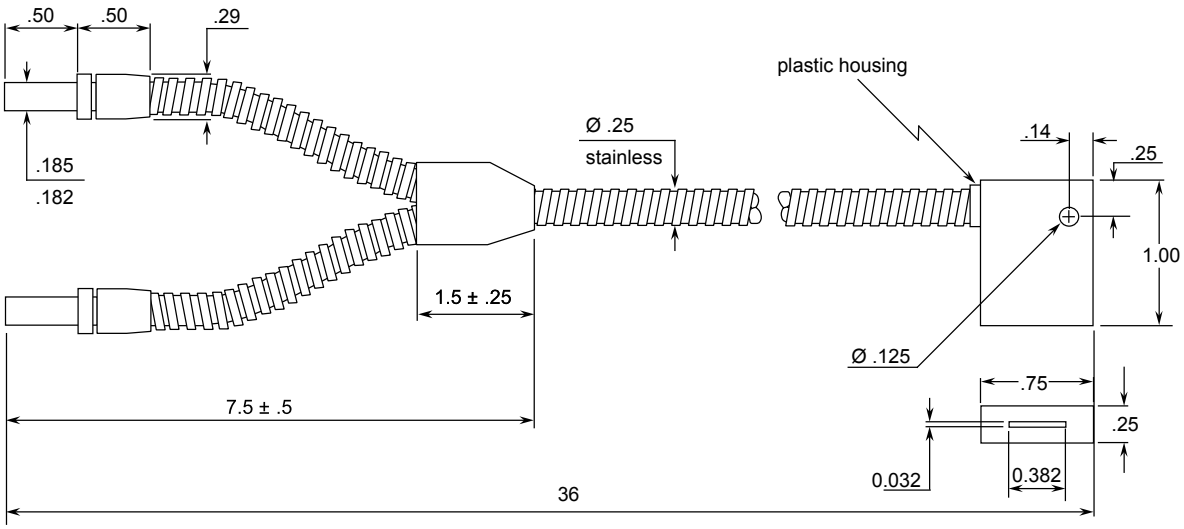

© Banner Engineering Corp. All rights reserved.
www.bannerengineering.com