K100 Pro Indicator Beacon (DC)

Features

Programmable Multicolor Indicator with Optional Audible Alarm for Indoor or Outdoor Use



- Industrial beacon providing bright, configurable indication for OEMs and users that need visible status information
- Rugged construction provides years of uninterrupted operation
- Unique water-shed beacon design helps protect the indicator
- Fourteen colors in one device
- Programmable using Banner's Pro Editor software and Pro Converter Cable
- 36 mm threaded polycarbonate base
- Rugged IP66 and IP69K per ISO 20653, UL Type 4X housing
- PNP or NPN operation depending on wiring
- Variety of connector options
- Rugged UV-stabilized polycarbonate base and window
- 12 V DC to 48 V DC operating voltage

Pro Editor

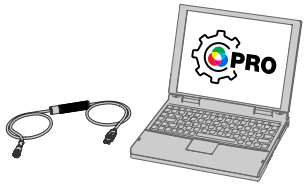

Use Banner's Pro Editor software and Pro Converter Cable to create custom configurations by selecting different colors, flash patterns, and animations.
For more information visit www.bannerengineering.com/proeditor.

Full Preview Connection (Required)

The full preview connection must be used for the K100 Pro Indicator Beacon.

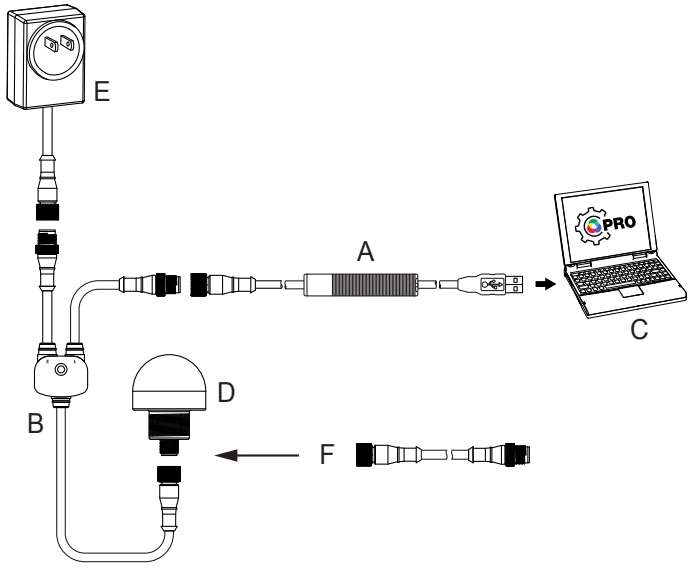

A = Pro Converter Cable (MQDC-506-USB)
B = Splitter (CSB-M1251FM1251M)
C = PC running Pro Editor software
D = Any Banner Pro Series-enabled device (K50 shown)
E = Power Supply (PSW-24-1, PSW-24-2, or PSD-24-4)
F = 8-Pin to 5-Pin Double-Ended Cordset (MQDC-801-5M-PRO), required for 8-Pin models

Models

Standard models shown. Contact factory for other options.

Family	Style	Type	Colors	Audible	Connector[1]
K100	P	L	RGB7	A	Q

Continued on page 2

[1] Models with a quick-disconnect connector require a mating cordset.

Original Instructions
02-Sep-25

© Banner Engineering Corp. All rights reserved.
www.bannerengineering.com

229901
p/n: 229901 Rev. E

ПРОМЭЛЕКТРОНИКА/ sales@prom-elec.com

Continued from page 1

Family	Style	Type	Colors	Audible	Connector
	P = Pro	L = Indicator	RGB7 = RGB Multicolor	Blank = None A = Audible	Blank = 2 m (6.5 ft) integral PVC-jacketed cable Q = Integral 5-pin M12 male quick-disconnect connector QP = 150 mm (6 in) PVC-jacketed cable with a 5-pin M12 male quick-disconnect connector

Wiring

PNP Input	NPN Input	Key
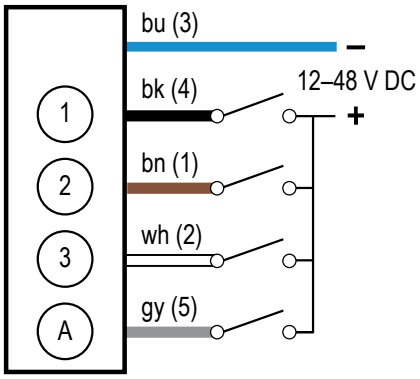	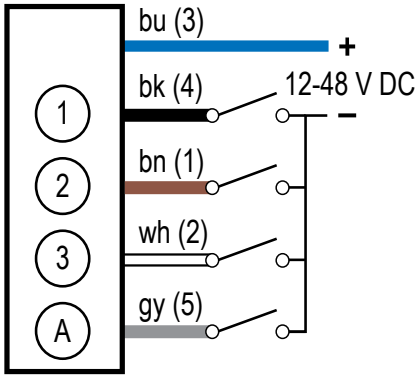	1 = Brown 2 = White 3 = Blue 4 = Black 5 = Gray

An "X" denotes an active input.

For example: When the black wire and the white wire are both active, the indicator will be Magenta Steady.

Default Configuration

Wiring				Operating Mode/Function	
Black	Brown	White	Gray	Non-Audible	Audible
X				Red Steady	Red Steady
	X			Green Steady	Green Steady
		X		Blue Steady	Blue Steady
X	X			Yellow Steady	Yellow Steady
X		X		Magenta Steady	Magenta Steady
	X	X		Cyan Steady	Cyan Steady
X	X	X		White Steady	White Steady
			X	Off	Audible Steady, Frequency 2.5 KHz, Volume High
X			X	Red Steady	Red Steady, Audible Steady, Frequency 2.5 KHz, Volume High
	X		X	Green Steady	Green Steady, Audible Steady, Frequency 2.5 KHz, Volume High
		X	X	Blue Steady	Blue Steady, Audible Steady, Frequency 2.5 KHz, Volume High
X	X		X	Yellow Steady	Yellow Steady, Audible Steady, Frequency 2.5 KHz, Volume High
X		X	X	Magenta Steady	Magenta Steady, Audible Steady, Frequency 2.5 KHz, Volume High
	X	X	X	Cyan Steady	Cyan Steady, Audible Steady, Frequency 2.5 KHz, Volume High
X	X	X	X	White Steady	White Steady, Audible Steady, Frequency 2.5 KHz, Volume High

Specifications

Supply Voltage and Current

12 V DC to 48 V DC

Maximum current (mA):

Voltage	Light Only	Light & Audible
12	395	535
18	265	350
24	200	260
30	160	210
36	140	180
42	125	160
48	110	145

Supply Protection Circuitry

Protected against reverse polarity and transient voltages

Leakage Current Immunity

400 µA

Indicator Response Time

On response: 325 ms (max)

Off response: 20 ms (max)

Connections

Integral 5-pin M12 male quick-disconnect connector, 150 mm (6 in) PVC-jacketed cable with an M12 quick disconnect, or 2 m (6.5 ft) integral PVC-jacketed cable, depending on model

Models with a quick disconnect require a mating cordset

© Banner Engineering Corp. All rights reserved.
www.bannerengineering.com

Mounting

M36 by 2.0 threaded base, maximum torque 5.0 N·m (44 inch-lbf)

Interior 3/4-14 NPT Thread

Mounting nut included

Adjacent Unit Mounting Separation Distance

Minimum: 0 in (mounted with unit flanges touching)

Audible Characteristics

Sound Intensity at 2.5 KHz, at 1 m (typical):
Low volume setting: 93 dB
Medium volume setting: 96 dB
High volume setting: 101 dB

Construction

Base, Dome, and Nut: Polycarbonate

Operating Conditions

–40 °C to +60 °C (–40 °F to +140 °F)

90% at +50 °C maximum relative humidity (non-condensing)

Storage Temperature: –40 °C to +70 °C (–40 °F to +158 °F)

Vibration and Mechanical Shock

Meets IEC 60068-2-6 requirements (Vibration: 10 Hz to 55 Hz, 1.0 mm amplitude, 5 minutes sweep, 30 minutes dwell)

Meets IEC 60068-2-27 requirements (Shock: 30G 11 ms duration, half sine wave)

Impact: IK08 (IEC 60068-2-75)

Environmental Rating

IP66, IP69K per ISO 20653, UL Type 4X

LED Lifetime

Lumen maintenance L_{70}

When operating within specifications, output decreases less than 30% after 42,000 hours

Pro Editor Configuration

Connection to Pro Editor software enables control of:

- **Animation:** Steady, Flash, Two Color Flash, Intensity Sweep, Two Color Sweep, Wave, Double Wave
- **Color:** Green, Red, Yellow, Blue, White, Cyan, Magenta, Amber, Rose, Lime Green, Orange, Sky Blue, Violet, Spring Green
- **Intensity:** Off, Low, Medium, High, Custom
- **Speed:** Slow, Standard, Fast, Custom
- **Pattern:** Normal, Strobe, 3-Pulse, SOS, Random
- **Direction:** Clockwise (CW), Counter-Clockwise (CCW)
- **Audio Feedback:** Off, On, Pattern, Advanced Audible
- **Audible Tones:** Pulse, Wobble, Strobe, Whoop, Staccato, Siren, Continuous 1, Continuous 2, Jingle, Melody 1, Melody 2, Melody 3
- **Audible Intensity:** Low, Medium, High
- One pin configurable as either an input or an output

Pro Converter Cable required to interface between PC and indicator, see accessories

Required Overcurrent Protection

WARNING: Electrical connections must be made by qualified personnel in accordance with local and national electrical codes and regulations.

Overcurrent protection is required to be provided by end product application per the supplied table.

Overcurrent protection may be provided with external fusing or via Current Limiting, Class 2 Power Supply.

Supply wiring leads < 24 AWG shall not be spliced.

For additional product support, go to www.bannerengineering.com.

Supply Wiring (AWG)	Required Overcurrent Protection (A)	Supply Wiring (AWG)	Required Overcurrent Protection (A)
20	5.0	26	1.0
22	3.0	28	0.8
24	2.0	30	0.5

Certifications

Banner Engineering BV
Park Lane, Culliganlaan 2F bus 3
1831 Diegem, BELGIUM

Turck Banner LTD Blenheim House
Blenheim Court
Wickford, Essex SS11 8YT
GREAT BRITAIN

Indicator Characteristics

Color	Dominant Wavelength (nm) or Color Temperature (CCT)	Color Coordinates[2]		Lumen Output (Typical at 25 °C)
		x	y	
Red	620 nm	0.69	0.3081	36
Green	525 nm	0.162	0.7112	73
Blue	468 nm	0.14	0.0539	14
Yellow	575 nm	0.478	0.47	91
Magenta	-	0.3877	0.1817	47
Cyan	492 nm	0.1666	0.3406	83
White	6000K	0.3379	0.338	112
Amber	590 nm	0.5566	0.4098	63
Rose	-	0.5234	0.231	39
Lime Green	562 nm	0.3987	0.5306	99
Orange	600 nm	0.6135	0.3665	50
Sky Blue	485 nm	0.1483	0.2476	87
Violet	-	0.2148	0.0938	28
Spring Green	507 nm	0.178	0.5375	77

Internal temperature compensation circuitry: Reduces the Lumen Output to decrease the unit's internal operating temperature. The amount of reduction is dependent on the ambient operating temperature, supply voltage, color, and/or audible functions being utilized.

[2] Refer to CIE 1931 chromaticity diagram or color chart, to show equivalent color with indicated color coordinates.

© Banner Engineering Corp. All rights reserved.
www.bannerengineering.com

Dimensions

All measurements are listed in millimeters [inches], unless noted otherwise. The measurements provided are subject to change.

Standard Models	Audible Models
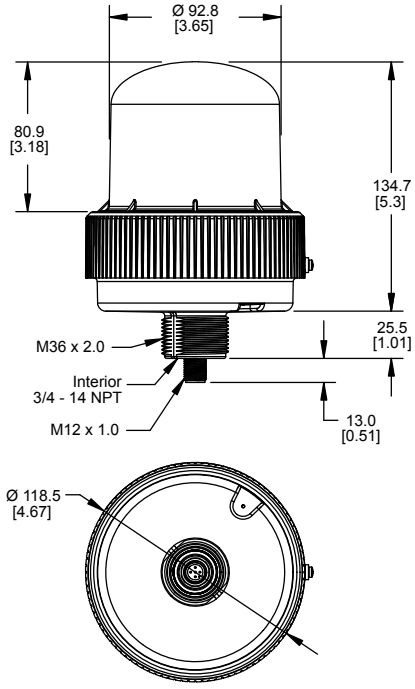	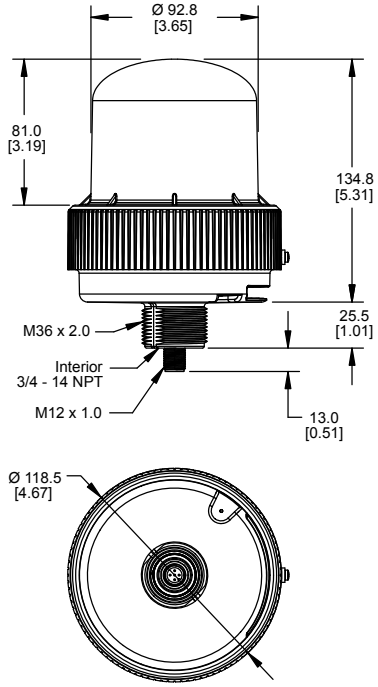

Accessories

Pro Editor Hardware

MQDC-506-USB

- Pro Converter Cable
- 1.83 m (6 ft) length 5-pin M12 quick disconnect to Device and USB to PC
- Required for connection to the configuration software

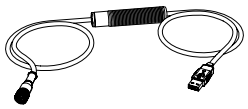

CSB-M1251FM1251M

- 5-pin parallel Y splitter (Male-Male-Female)
- For full Pro Editor preview capability
- Requires external power supply, sold separately

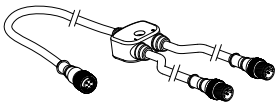

PSW-24-1

- 24 V DC, 1 A power supply
- 2 m (6.5 ft) PVC cable with M12 quick disconnect
- Provides external power with splitter cable, sold separately

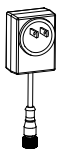

ACC-PRO-CABLE5

- Mating accessory for cabled and terminal models
- 150 mm (6 inch) PVC cable with M12 quick disconnect
- Lever wire nuts included (qty 5)
- Required to connect cabled models and screw terminal models to Pro Converter Cable, sold separately

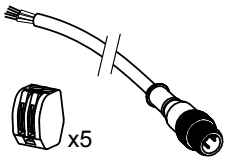

© Banner Engineering Corp. All rights reserved.
www.bannerengineering.com

Cordsets

5-Pin Single-Ended M12 Female Cordsets				
Model	**Length**	**Style**	**Dimensions**	**Pinout (Female)**
MQDC1-501.5	0.5 m (1.5 ft)	Straight	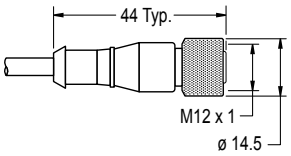	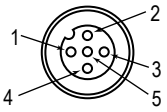 1 = Brown 2 = White 3 = Blue 4 = Black 5 = Gray c UL us
MQDC1-503	0.9 m (2.9 ft)			
MQDC1-506	2 m (6.5 ft)			
MQDC1-515	5 m (16.4 ft)			
MQDC1-530	9 m (29.5 ft)			
MQDC1-560	18 m (59 ft)			
MQDC1-5100	31 m (101.7 ft)			
MQDC1-506RA	2 m (6.5 ft)	Right-Angle	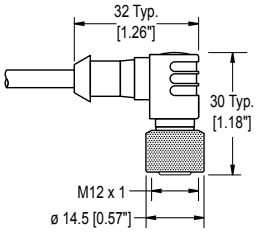	
MQDC1-515RA	5 m (16.4 ft)			
MQDC1-530RA	9 m (29.5 ft)			
MQDC1-560RA	19 m (62.3 ft)			

Brackets

LMB36RA

- Indicator light right-angle mounting
- 36 mm mounting hole
- Stainless steel

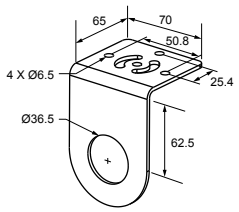

Elevated Mount System

Elevated Mount System (1/2" Pipes)

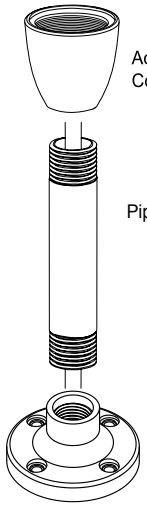

Adapter/Cover Model	Description
SA-M36E12	• Adapter from M36 thread to ½-14 NPSM thread • Streamlined black plastic mounting base adapter/cover • Drilled hole

Black Anodized Aluminum, ½ in. NPT Pipe Models	Clear Anodized Aluminum, ½ in. NPT Pipe Models	Description
SOP-E12-150A, 150 mm (6 in) long	**SOP-E12-150AC**, 150 mm (6 in) long	• Elevated-use stand-off pipe • Threaded at both ends • Compatible with most industrial environments
SOP-E12-300A, 300 mm (12 in) long	**SOP-E12-300AC**, 300 mm (12 in) long	
SOP-E12-600A, 600 mm (24 in) long	-	
SOP-E12-900A, 900 mm (36 in) long	**SOP-E12-900AC**, 900 mm (36 in) long	

Mounting Base Model	Description
SA-F12	• Elevated-use stand-off pipes (½ in, NPSM/DN15) • M5 mounting hardware and nitrile gasket included • Die-cast zinc base with black paint

© Banner Engineering Corp. All rights reserved.
www.bannerengineering.com

Elevated Mount System (3/4" Pipes)

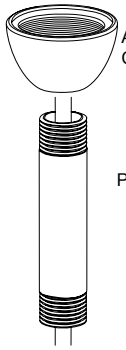

Adapter/Cover Model	Description
SA-M36SOP	• M36 thread adapter with clearance for ¾ pipe mount • Streamlined black plastic mounting base adapter/cover • Drilled hole

Black Anodized Aluminum, ¾ in. NPT Pipe Models	Description
SOP-E34-150A, 150 mm (6 in) long	• Elevated-use stand-off pipe • Threaded at both ends • Compatible with most industrial environments
SOP-E34-300A, 300 mm (12 in) long	
SOP-E34-600A, 600 mm (24 in) long	
SOP-E34-900A, 900 mm (36 in) long	

Banner Engineering Corp Limited Warranty

Banner Engineering Corp. warrants its products to be free from defects in material and workmanship for one year following the date of shipment. Banner Engineering Corp. will repair or replace, free of charge, any product of its manufacture which, at the time it is returned to the factory, is found to have been defective during the warranty period. This warranty does not cover damage or liability for misuse, abuse, or the improper application or installation of the Banner product.

THIS LIMITED WARRANTY IS EXCLUSIVE AND IN LIEU OF ALL OTHER WARRANTIES WHETHER EXPRESS OR IMPLIED (INCLUDING, WITHOUT LIMITATION, ANY WARRANTY OF MERCHANTABILITY OR FITNESS FOR A PARTICULAR PURPOSE), AND WHETHER ARISING UNDER COURSE OF PERFORMANCE, COURSE OF DEALING OR TRADE USAGE.

This Warranty is exclusive and limited to repair or, at the discretion of Banner Engineering Corp., replacement. **IN NO EVENT SHALL BANNER ENGINEERING CORP. BE LIABLE TO BUYER OR ANY OTHER PERSON OR ENTITY FOR ANY EXTRA COSTS, EXPENSES, LOSSES, LOSS OF PROFITS, OR ANY INCIDENTAL, CONSEQUENTIAL OR SPECIAL DAMAGES RESULTING FROM ANY PRODUCT DEFECT OR FROM THE USE OR INABILITY TO USE THE PRODUCT, WHETHER ARISING IN CONTRACT OR WARRANTY, STATUTE, TORT, STRICT LIABILITY, NEGLIGENCE, OR OTHERWISE.**

Banner Engineering Corp. reserves the right to change, modify or improve the design of the product without assuming any obligations or liabilities relating to any product previously manufactured by Banner Engineering Corp. Any misuse, abuse, or improper application or installation of this product or use of the product for personal protection applications when the product is identified as not intended for such purposes will void the product warranty. Any modifications to this product without prior express approval by Banner Engineering Corp will void the product warranties. All specifications published in this document are subject to change; Banner reserves the right to modify product specifications or update documentation at any time. Specifications and product information in English supersede that which is provided in any other language. For the most recent version of any documentation, refer to: www.bannerengineering.com.

For patent information, see www.bannerengineering.com/patents.

© Banner Engineering Corp. All rights reserved.
www.bannerengineering.com