Models

TL70 Multicolor Segments - Model Key

Housing	—	Colors			Housing Color	Example Models
SG-TL70	—	G	Y	R		
TL70 Segment		G = Green Y = Yellow R = red B = Blue W = White			Blank = Black C = Gray	SG-TL70-GYR (3 color: green, yellow, red) SG-TL70-GR (2 colors: green, red) SG-TL70-GY (2 colors: green, yellow)

For more information regarding TL70 Modular Tower Light Final Assemblies, refer to the following documents:

- TL70 Modular Tower Light Final Assembly Datasheet (p/n 182214)
- TL70 Wireless Modular Tower Light Datasheet (p/n 185469)
- TL70 Modular Tower Light Final Assembly For AC Datasheet (p/n 191349)

Configuring the Module

	Assembly Options		DIP Switches	
			1	2
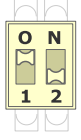	Light Module Flash Rate	3 Hz	ON	OFF
		1.5 Hz	ON	ON
		Solid On*	OFF	OFF

* Factory default setting

Wiring

PNP Input

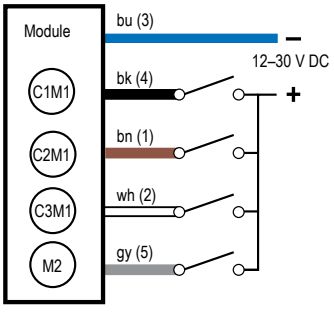

M12 Male Pinouts

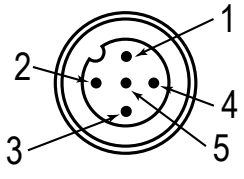

Key

1 = brown
2 = white
3 = blue
4 = black
5 = gray

C1M1 = Color 1 Module 1
C2M1 = Color 2 Module 1
C3M1 = Color 3 Module 1
M2 = Module 2

Specifications

Supply Voltage and Current

12 V DC to 30 V DC

Indicators - Maximum current per LED color:

Blue, Green, White: 420 mA at 12 V DC; 150 mA at 30 V DC
Red, Yellow: 285 mA at 12 V DC; 120 mA at 30 V DC

Supply Protection Circuitry

Protected against transient voltages

Indicator Response Time

Off Response: 150 µs (maximum) at 12 V DC to 30 V DC

On Response: 180 ms (maximum) at 12 V DC; 50 ms (maximum) at 30 V DC

Original Instructions
21-Aug-25

© Banner Engineering Corp. All rights reserved.
www.bannerengineering.com

188350
p/n: 188350 Rev. E

ПРОМЭЛЕКТРОНИКА/ sales@prom-elec.com

Indicator Characteristics

Color	Dominant Wavelength (nm) or Color Temperature (CCT)	Lumen Output (Typical at 25° C)
Green	525 nm	92
Red	625 nm	40
Yellow	590 nm	22
Blue	470 nm	32
White	5000 K	125

Construction

Bases, segments, covers: polycarbonate

Indicators

2 or 3 colors depending on model: Green, Red, Yellow, Blue, and White

Flash rates: 1.5 Hz ±10% and 3 Hz ±10%

LEDs are independently selected

Operating Conditions

–40 °C to +50 °C (–40 °F to +122 °F)

95% at +50 °C maximum relative humidity (non-condensing)

Environmental Rating

IP65

Vibration and Mechanical Shock

Vibration: 10 Hz to 55 Hz, 0.5 mm peak-to-peak amplitude per IEC 60068-2-6

Shock: 15G 11 ms duration, half sine wave per IEC 60068-2-27

Required Overcurrent Protection

WARNING: Electrical connections must be made by qualified personnel in accordance with local and national electrical codes and regulations.

Overcurrent protection is required to be provided by end product application per the supplied table.

Overcurrent protection may be provided with external fusing or via Current Limiting, Class 2 Power Supply.

Supply wiring leads < 24 AWG shall not be spliced.

For additional product support, go to www.bannerengineering.com.

Supply Wiring (AWG)	Required Overcurrent Protection (A)	Supply Wiring (AWG)	Required Overcurrent Protection (A)
20	5.0	26	1.0
22	3.0	28	0.8
24	2.0	30	0.5

Certifications

Banner Engineering BV
Park Lane, Culliganlaan 2F bus 3
1831 Diegem, BELGIUM

c UL us LISTED

Banner Engineering Corp Limited Warranty

Banner Engineering Corp. warrants its products to be free from defects in material and workmanship for one year following the date of shipment. Banner Engineering Corp. will repair or replace, free of charge, any product of its manufacture which, at the time it is returned to the factory, is found to have been defective during the warranty period. This warranty does not cover damage or liability for misuse, abuse, or the improper application or installation of the Banner product.

THIS LIMITED WARRANTY IS EXCLUSIVE AND IN LIEU OF ALL OTHER WARRANTIES WHETHER EXPRESS OR IMPLIED (INCLUDING, WITHOUT LIMITATION, ANY WARRANTY OF MERCHANTABILITY OR FITNESS FOR A PARTICULAR PURPOSE), AND WHETHER ARISING UNDER COURSE OF PERFORMANCE, COURSE OF DEALING OR TRADE USAGE.

This Warranty is exclusive and limited to repair or, at the discretion of Banner Engineering Corp., replacement. **IN NO EVENT SHALL BANNER ENGINEERING CORP. BE LIABLE TO BUYER OR ANY OTHER PERSON OR ENTITY FOR ANY EXTRA COSTS, EXPENSES, LOSSES, LOSS OF PROFITS, OR ANY INCIDENTAL, CONSEQUENTIAL OR SPECIAL DAMAGES RESULTING FROM ANY PRODUCT DEFECT OR FROM THE USE OR INABILITY TO USE THE PRODUCT, WHETHER ARISING IN CONTRACT OR WARRANTY, STATUTE, TORT, STRICT LIABILITY, NEGLIGENCE, OR OTHERWISE.**

Banner Engineering Corp. reserves the right to change, modify or improve the design of the product without assuming any obligations or liabilities relating to any product previously manufactured by Banner Engineering Corp. Any misuse, abuse, or improper application or installation of this product or use of the product for personal protection applications when the product is identified as not intended for such purposes will void the product warranty. Any modifications to this product without prior express approval by Banner Engineering Corp will void the product warranties. All specifications published in this document are subject to change; Banner reserves the right to modify product specifications or update documentation at any time. Specifications and product information in English supersede that which is provided in any other language. For the most recent version of any documentation, refer to: www.bannerengineering.com.

For patent information, see www.bannerengineering.com/patents.

© Banner Engineering Corp. All rights reserved.
www.bannerengineering.com