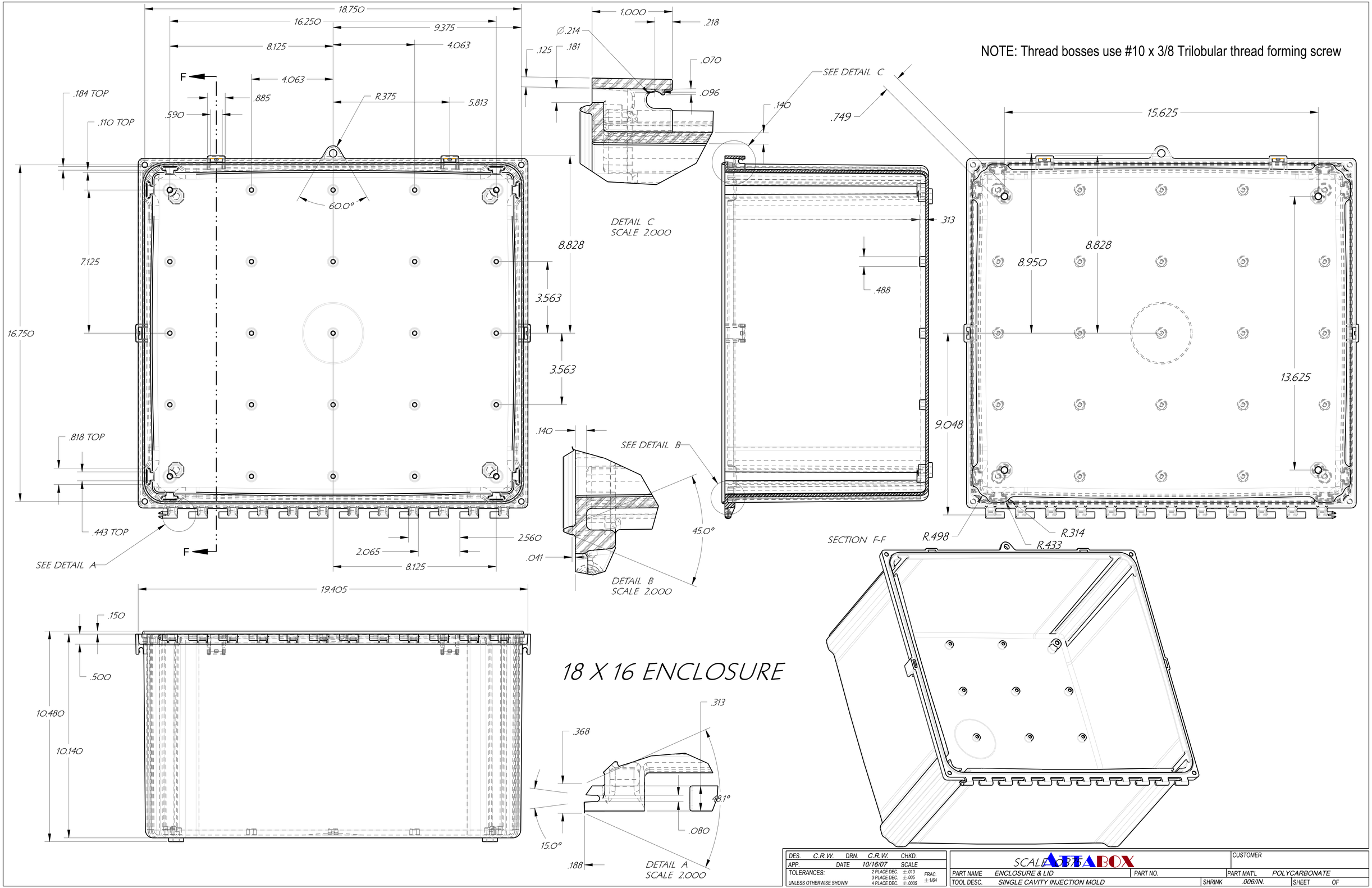

ПРОМЭЛЕКТРОНИКА/ sales@prom-elec.com

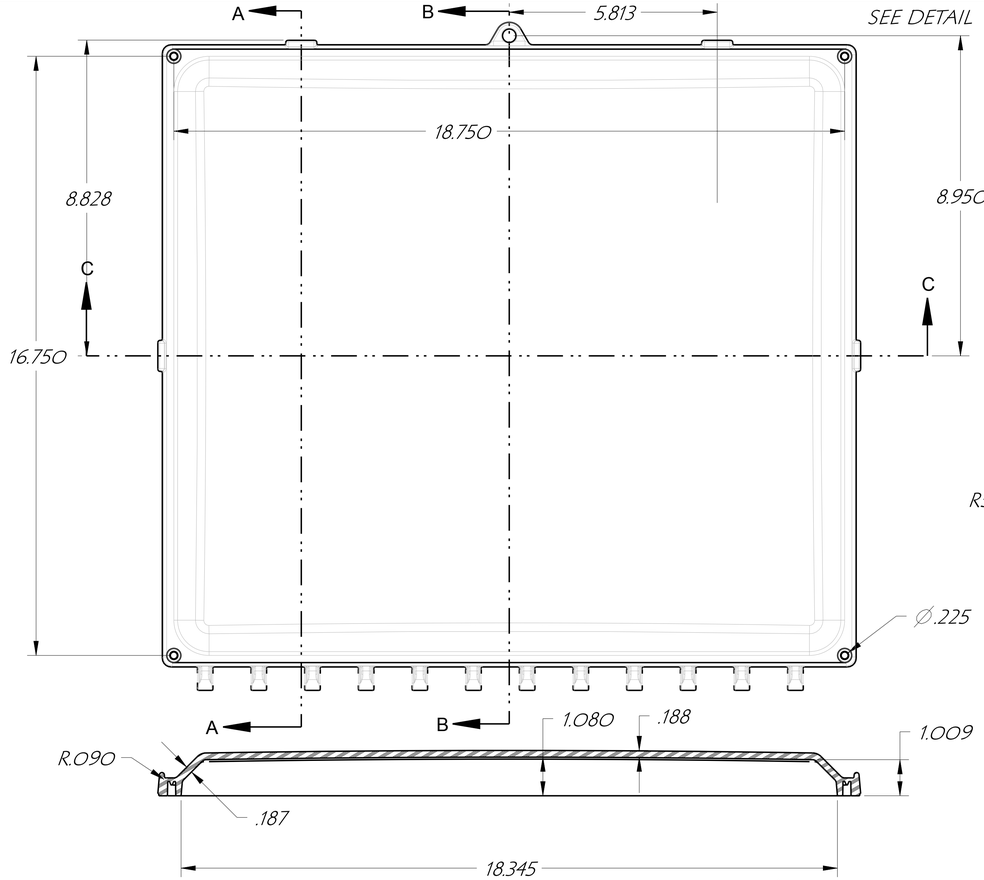

SECTION C-C

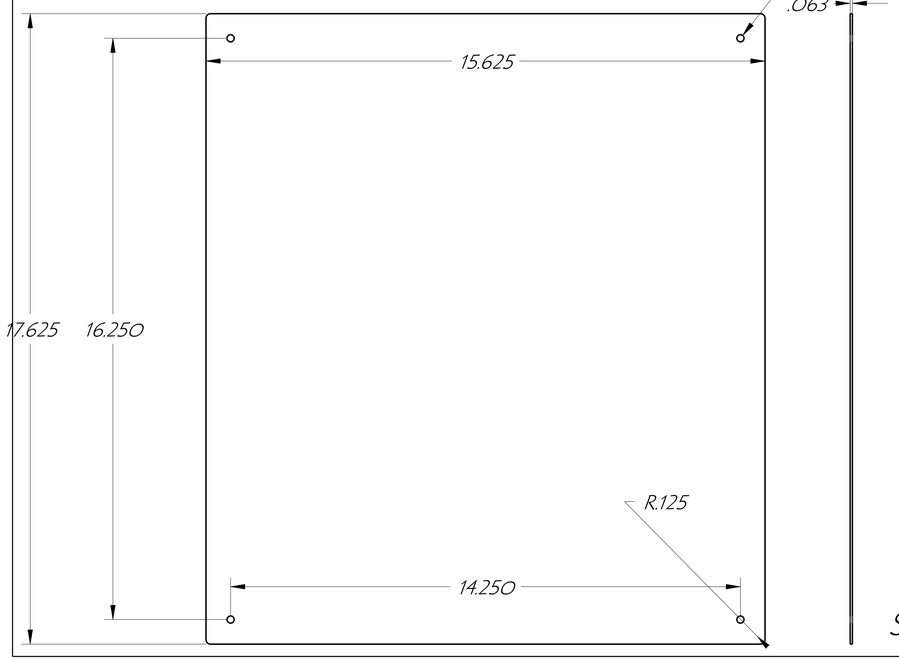

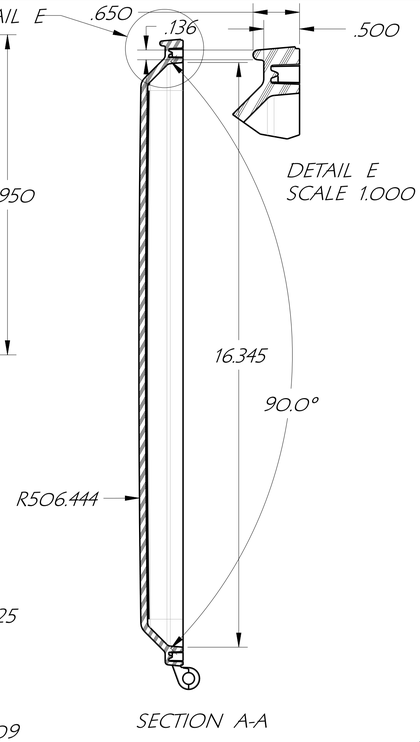

DETAIL E
SCALE 1.000

SECTION A-A

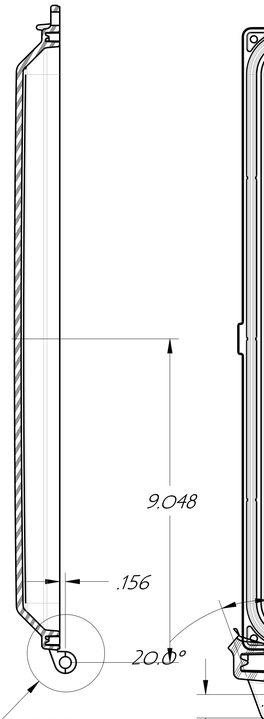

SECTION B-B

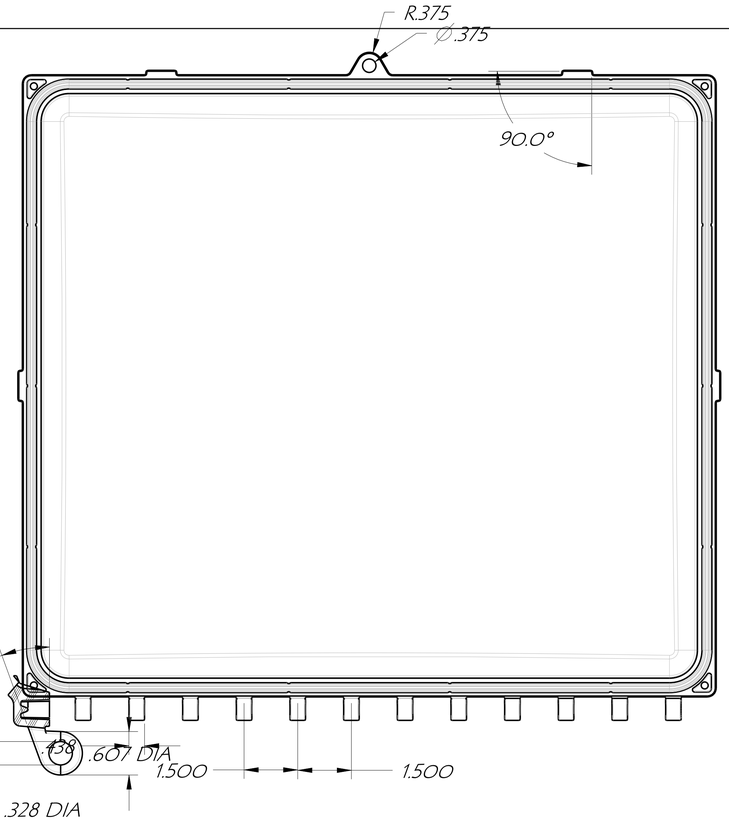

DETAIL F
SCALE 1.000

18 X 16 LID

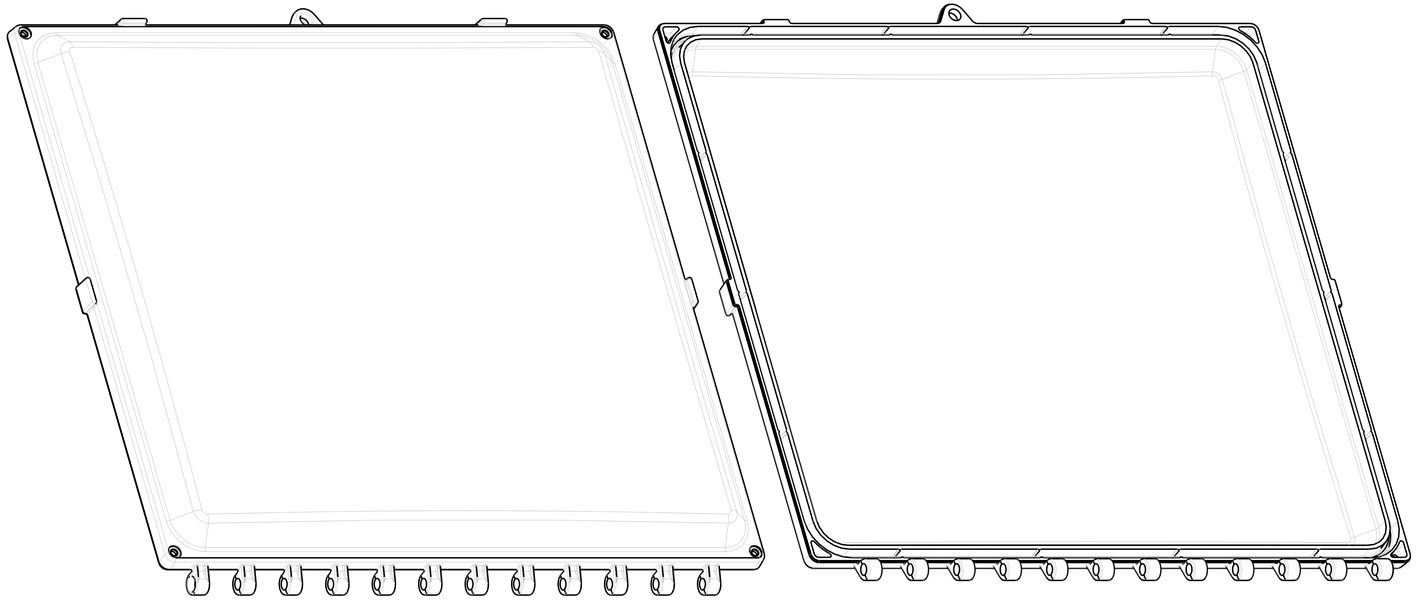

SUB PANEL OR SWING PANEL

DES. C.R.W.	DRN. C.R.W.	CHKD.			
APP.	DATE 10/16/07	SCALE			
TOLERANCES:	2 PLACE DEC. ±.010	FRAC. ±1/64	ATTABOX		CUSTOMER
UNLESS OTHERWISE SHOWN	3 PLACE DEC. ±.005		PART NAME ENCLOSURE & LID	PART NO.	PART MAT'L POLYCARBONATE
	4 PLACE DEC. ±.0005		TOOL DESC. SINGLE CAVITY INJECTION MOLD	SHRINK .006/IN.	SHEET OF

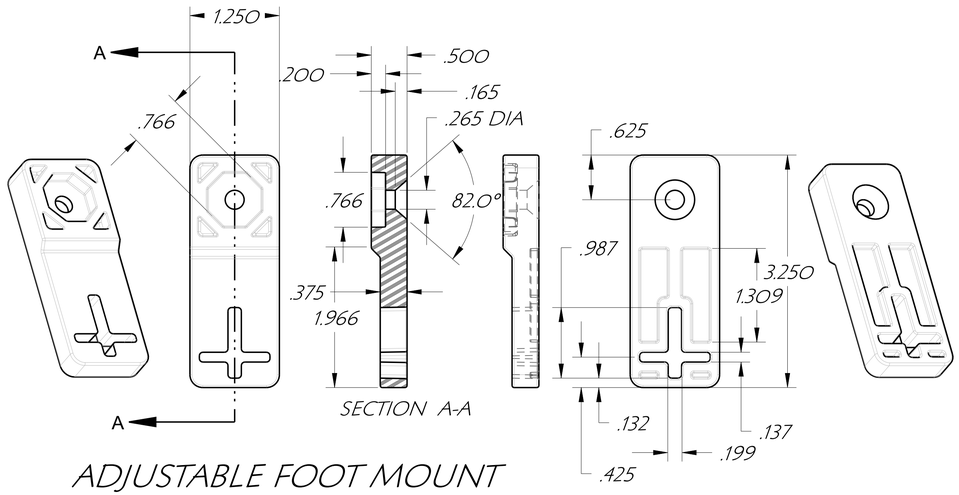

ADJUSTABLE FOOT MOUNT



LID HINGE CAP

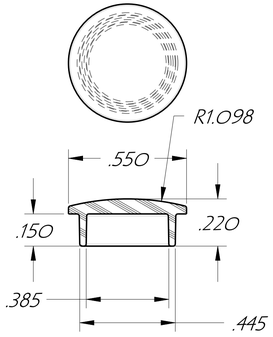

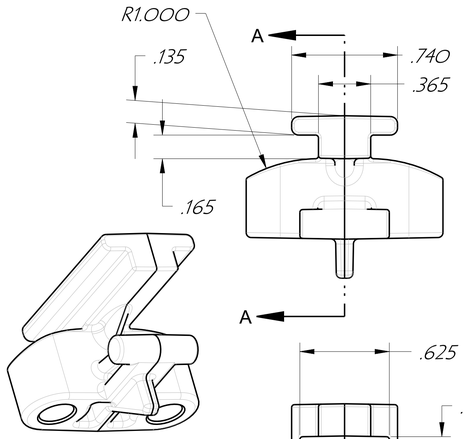

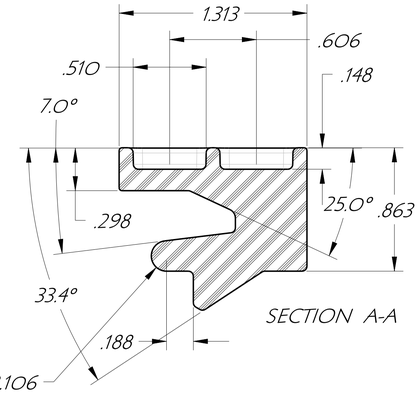

FLUSH PANEL MOUNT

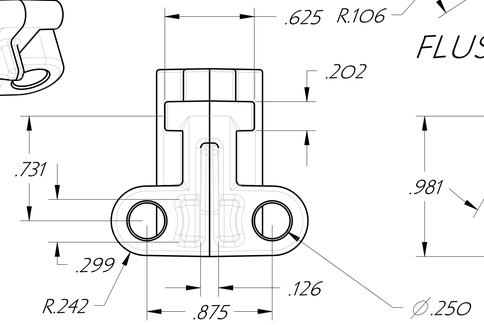

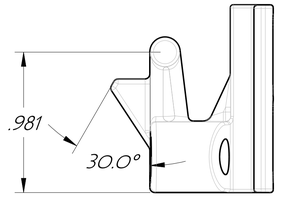

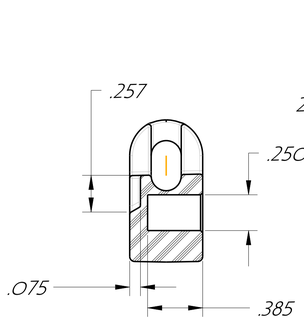

SECTION A-A

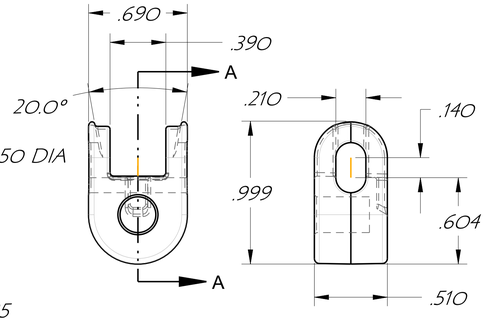

RETRACTING PANEL HINGE

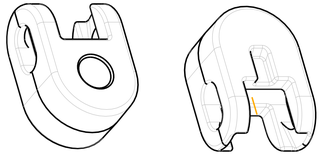

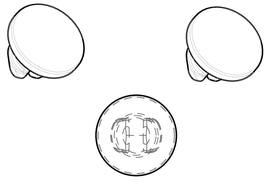

PLUG

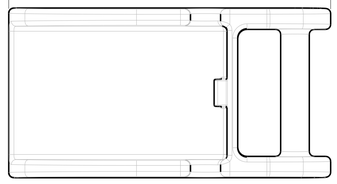

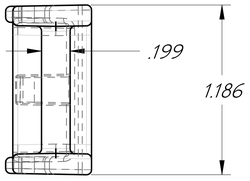

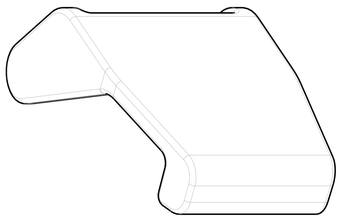

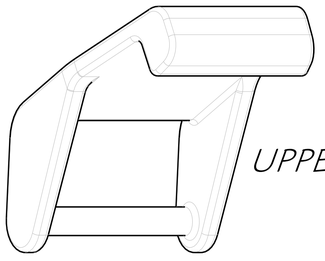

UPPER LATCH

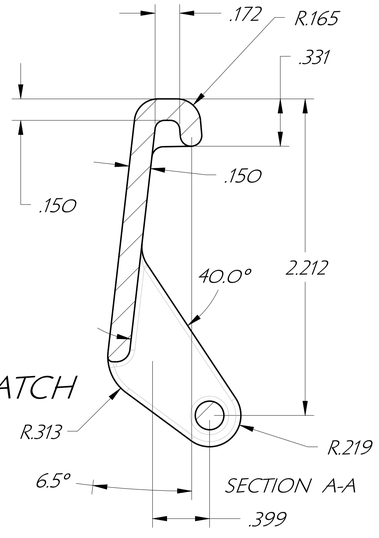

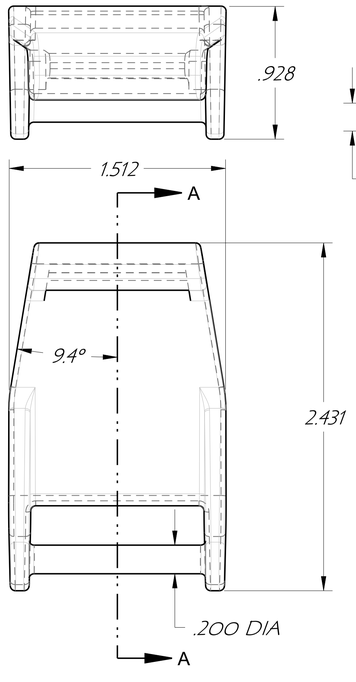

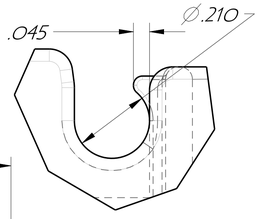

LOWER LATCH

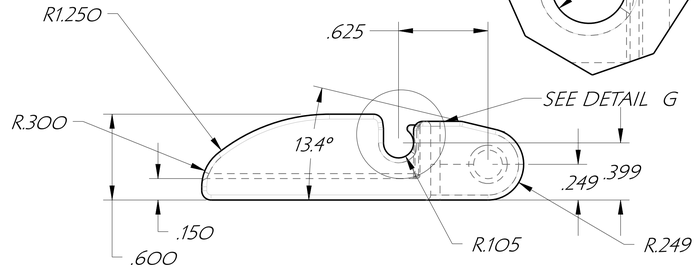

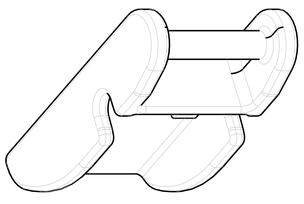

DES. C.R.W.	DRN. C.R.W.	CHKD.	ATTABOX		CUSTOMER
APP.	DATE 10/16/07	SCALE			
TOLERANCES:	2 PLACE DEC. ±.010	FRAC. ±1/64	PART NAME ENCLOSURE & LID	PART NO.	PART MAT'L POLYCARBONATE
UNLESS OTHERWISE SHOWN	3 PLACE DEC. ±.005 4 PLACE DEC. ±.0005		TOOL DESC. SINGLE CAVITY INJECTION MOLD	SHRINK .006/IN.	SHEET OF