MSA Series Stand

Features

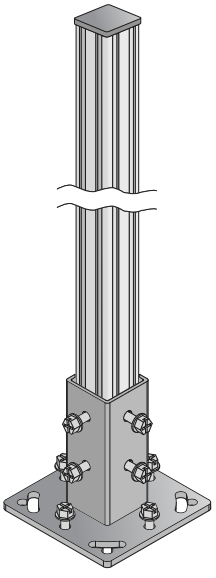

MSA Series Stands for optical safety system sensors or corner mirrors.

- Easy to assemble
- Available in five pole heights
- Solidly supports emitter, receiver, or corner mirror
- Strong extruded and anodized aluminum poles
- Dual-channel design for accurate sensor/mirror adjustment

Models

- Provides mounting T-slots with 20 mm dimension between slots
- Base included. Available without a base by adding the suffix **NB** to the model number (for example, **MSA-S42-1NB**)

Stand Model	Pole Height	Useable Stand Height	Overall Stand Height	
MSA-S24-1	610 mm (24 in)	483 mm (19 in)	616 mm (24.25 in)	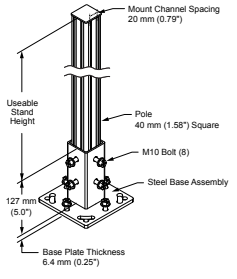
MSA-S42-1	1065 mm (42 in)	938 mm (37 in)	1071 mm (42.2 in)	
MSA-S66-1	1676 mm (66 in)	1549 mm (61 in)	1682 mm (66.25 in)	
MSA-S84-1	2134 mm (84 in)	2007 mm (79 in)	2140 mm (84.25 in)	
MSA-S105-1	2667 mm (105 in)	2540 mm (100 in)	2673 mm (105.25 in)	

Overview

Banner MSA Series stands are designed specifically for use with Banner optical safety system emitters and receivers, and corner mirrors. The poles are constructed of strong, lightweight extruded aluminum, and have a dual-channel design that allows easy and accurate height adjustment using the supplied T nuts.

An adapter plate is included for attaching the various EZ-SCREEN families to the pole. The SGS Grids and SSM Series mirrors require the **EZA-MBK-2** adapter bracket. A post level is included with each stand for accurate installation.

The pole is held securely in its base by four bolts (included). The base bolts to a flat surface with user-supplied 5/16" or M8 hardware. The base plate has four threaded holes for leveling bolts. The mounting design allows the sensor or mirror to easily slide up or down the pole and then lock into position by tightening four screws.

Original Instructions
05-Feb-25

© Banner Engineering Corp. All rights reserved.
www.bannerengineering.com

43687
p/n: 43687 Rev. G

ПРОМЭЛЕКТРОНИКА/ sales@prom-elec.com

The following items are included with each MSA Series Stand:

1. Clear anodized extruded aluminum pole (qty 1)
2. Black e-coat-painted welded steel base assembly (qty 1 for models with base, not included for models without base)
3. Post level (qty 1) (not shown)
4. Black zinc-plated steel adapter plate (qty 2)
5. M10 × 1 × 20 mm-long hex head bolt (qty 8 for models with base, qty 4 for models without base (not used))
6. M4 × 0.7 × 10 mm-long slotted hex head screw (qty 12)
7. M4 × 0.7 × 12 mm-long slotted hex head screw (qty 6; not shown)
8. M4 × 0.7 × 8 mm-long extra-wide truss head Phillips screw (qty 6; not shown)
9. M4 T-nut (qty 8; not shown, use as needed)
10. Pole cover (qty 1)

Adapter bracket **EZA-MBK-2** is required for mounting SGS Grids or SSM-Series mirrors. Refer to those product datasheets for more information.

MSA Stand Components

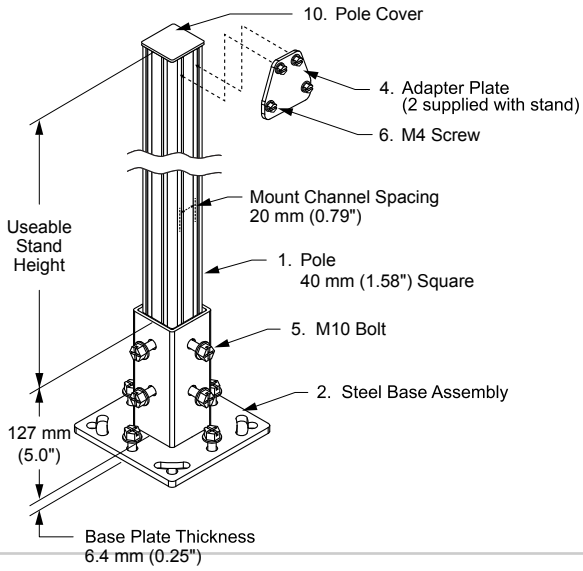

Install the Base and Pole

WARNING:

- **Maintain the required separation distance**
- **Failure to correctly calculate this distance and failure to maintain minimum separation distance can result in serious injury or death.**
- The light screen produced by the optical safety system sensors must be placed at a minimum safe distance from the dangerous motion of the machine being guarded. This necessary minimum distance is called the separation distance and is discussed in the appropriate instruction manuals.

Stand base mounting hole pattern

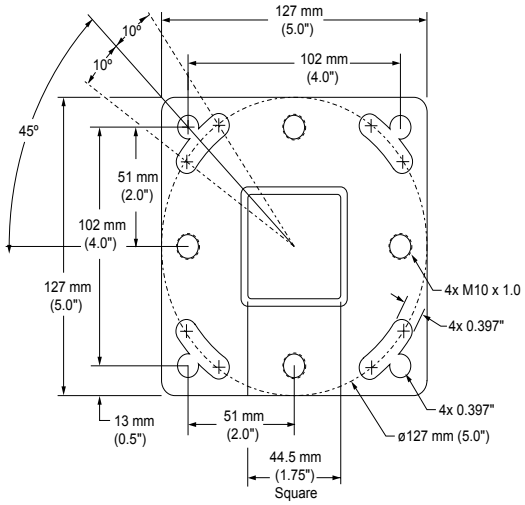

1. Secure the base to the floor or other flat surface using 5/16-inch or M8 hardware, supplied by the installer. Place the base on its mounting hardware, but do not tighten.
2. Install an M10 leveling bolt (supplied) into each of the four threaded holes for leveling purposes.
3. Using the post level (supplied), adjust the leveling bolts for true vertical level. Continue to check the vertical level of each pole while tightening the base mounting hardware.

Mount the Sensor or Mirror to the Pole

This kit includes the screws for more than one model.

- For the S4B end brackets, EZ-SCREEN SLS 14/30 mm, and EZ-SCREEN LS models, use the M4 x 12 mm-long slotted hex head screws.
- For the S4B side brackets, use the M4 x 8 mm-long extra-wide truss head Phillips screws.

© Banner Engineering Corp. All rights reserved.
www.bannerengineering.com

- For all other models, use the M4 x 10 mm-long slotted hex head screws.

1. Verify that all poles used for the light screen installation are exactly parallel before mounting sensors and/or mirrors.
2. Assemble the brackets and hardware as shown in the appropriate figure.

Adapter bracket-to-stand mounting, shown ready for mounting of SSM series mirror (adapter bracket sold separately)

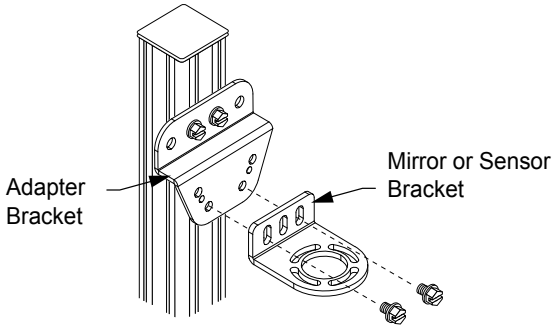

S4B sensor-to-stand mounting (end brackets, S4BA-MBK-11 and side brackets, S4B-MBK-16)

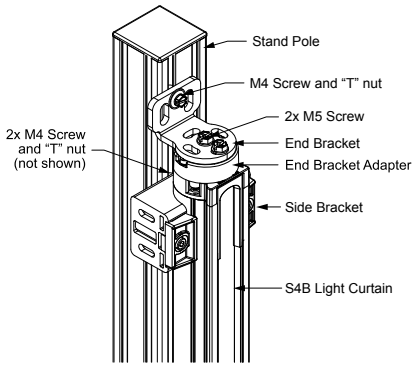

EZ-SCREEN SLS 14/30mm to stand mounting (standard)

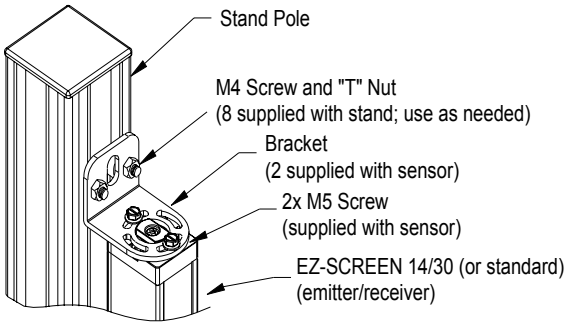

EZ-SCREEN LP to stand mounting

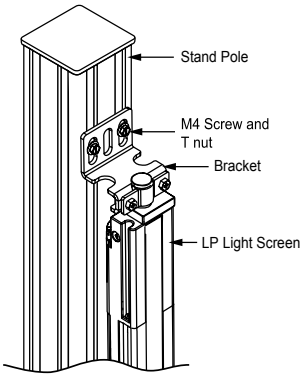

EZ-SCREEN LS sensor to stand mounting

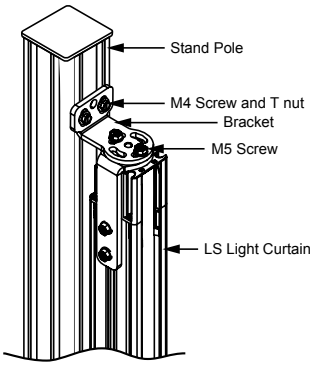

SGS Grid to stand mounting, using the SGS bracket and the EZA-MBK-2 adapter bracket (sold separately)

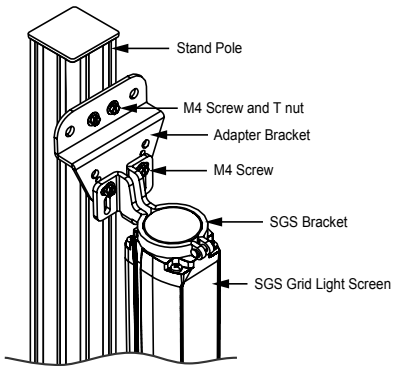

3. Loosely mount the bracket assemblies to the pole using the M4 screws and T nuts supplied with the stand.

   Note that all figures show the bracket assembly pointed out (away from the sensor or mirror). Except for the S4B models, one or both bracket assemblies may be reversed to point in if necessary. However, access to the mounting screws becomes less convenient and mirror rotation is limited when a bracket assembly is pointed in.
4. Mount the sensor or mirror to its brackets using the screws supplied with the sensor or mirror. Temporarily tighten those screws.
5. Slide the sensor or mirror into position along the length of the pole and tighten the M4 screws into their T nuts to lock the sensor or mirror into position.

© Banner Engineering Corp. All rights reserved.
www.bannerengineering.com

This step requires accuracy. If no mirrors are involved in the sensing path, then any emitter feature can be aligned vertically with the same feature on the receiver. However, if one or more mirrors are used, the center of each mirror must match the vertical position of the center of the defined area of the sensors. The upper and lower limits of the defined area are dimensioned in the light screen instruction manual.

6. Loosen the bracket screws to allow the sensor or mirror to rotate for alignment. See the light screen instruction manual for alignment information.

Banner Engineering Corp Limited Warranty

Banner Engineering Corp. warrants its products to be free from defects in material and workmanship for one year following the date of shipment. Banner Engineering Corp. will repair or replace, free of charge, any product of its manufacture which, at the time it is returned to the factory, is found to have been defective during the warranty period. This warranty does not cover damage or liability for misuse, abuse, or the improper application or installation of the Banner product.

THIS LIMITED WARRANTY IS EXCLUSIVE AND IN LIEU OF ALL OTHER WARRANTIES WHETHER EXPRESS OR IMPLIED (INCLUDING, WITHOUT LIMITATION, ANY WARRANTY OF MERCHANTABILITY OR FITNESS FOR A PARTICULAR PURPOSE), AND WHETHER ARISING UNDER COURSE OF PERFORMANCE, COURSE OF DEALING OR TRADE USAGE.

This Warranty is exclusive and limited to repair or, at the discretion of Banner Engineering Corp., replacement. **IN NO EVENT SHALL BANNER ENGINEERING CORP. BE LIABLE TO BUYER OR ANY OTHER PERSON OR ENTITY FOR ANY EXTRA COSTS, EXPENSES, LOSSES, LOSS OF PROFITS, OR ANY INCIDENTAL, CONSEQUENTIAL OR SPECIAL DAMAGES RESULTING FROM ANY PRODUCT DEFECT OR FROM THE USE OR INABILITY TO USE THE PRODUCT, WHETHER ARISING IN CONTRACT OR WARRANTY, STATUTE, TORT, STRICT LIABILITY, NEGLIGENCE, OR OTHERWISE.**

Banner Engineering Corp. reserves the right to change, modify or improve the design of the product without assuming any obligations or liabilities relating to any product previously manufactured by Banner Engineering Corp. Any misuse, abuse, or improper application or installation of this product or use of the product for personal protection applications when the product is identified as not intended for such purposes will void the product warranty. Any modifications to this product without prior express approval by Banner Engineering Corp will void the product warranties. All specifications published in this document are subject to change; Banner reserves the right to modify product specifications or update documentation at any time. Specifications and product information in English supersede that which is provided in any other language. For the most recent version of any documentation, refer to: www.bannerengineering.com.

For patent information, see www.bannerengineering.com/patents.

© Banner Engineering Corp. All rights reserved.
www.bannerengineering.com