Features

LED Ring Lights (in two sizes) for use with PresencePLUS® P4 sensors

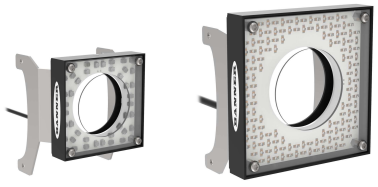

- Low-cost ring lights for PresencePLUS® P4 sensors
- Solid-state LED matrix; select continuous or strobed operation via sensor software
- Direct connection to a PresencePLUS® P4 sensor if the sensor is powered by 24 V DC
- Mounts directly to a PresencePLUS® P4 sensor using the included hardware

IMPORTANT: Read the following instructions before operating the light. Please download the complete LED..R..M Series Ring Lights technical documentation, available in multiple languages, from www.bannerengineering.com for details on the proper use, applications, Warnings, and installation instructions of this device.

IMPORTANT: Lea el siguiente instructivo antes de operar el luminario. Por favor descargue desde www.bannerengineering.com toda la documentación técnica de los LED..R..M Series Ring Lights, disponibles en múltiples idiomas, para detalles del uso adecuado, aplicaciones, advertencias, y las instrucciones de instalación de estos dispositivos.

IMPORTANT: Lisez les instructions suivantes avant d'utiliser le luminaire. Veuillez télécharger la documentation technique complète des LED..R..M Series Ring Lights sur notre site www.bannerengineering.com pour les détails sur leur utilisation correcte, les applications, les notes de sécurité et les instructions de montage.

Models

PresencePLUS P4 Sensor Models

Model		Color	Ambient Light Filter Kit	Polarizing Filter Kit	
62 × 62 mm	80 × 80 mm			62 × 62 mm	80 × 80 mm
LEDIR62X62M	LEDIR80X80M	Infrared, 940 nm	FLTI	—	—
LEDRR62X62M	LEDRR80X80M	Visible Red, 630 nm	FLTR (included with LEDRRPFK)	LEDRRPFKS	LEDRRPFK
LEDWR62X62M	LEDWR80X80M	White, All Visible	FLTB or FLTG		
LEDBR62X62M	LEDBR80X80M	Blue, 464 nm to 475 nm	FLTB		
LEDGR62X62M	LEDGR80X80M	Green, 520 nm to 540 nm	FLTG		

Installing the Ring Light

The ring light bracket attaches to the top of the *Presence*PLUS lens block, using the hardware kit provided.

NOTE: Before installing the light, it is recommended that an ambient light filter be installed behind the lens. The filter improves image quality by reducing unwanted ambient light.

Sensing Shiny Surfaces

To eliminate direct reflections without using polarizing filters, angle the sensor approximately 15° (or more) from perpendicular to a shiny surface.

Polarizing Kit

If it is necessary to mount the camera at a 90° angle to a shiny surface, the polarizing filter kit provides filters for both the LED ring light and sensor to reduce the negative effects of strong, direct light reflections. The red filter kit (FLTR) is included with the polarizing kit. When light colors other than red are used, discard the red filter in the polarizing kit and use the proper filter (see Models table). The polarizing filters reduce the amount of light returned to the sensor.

Original Instructions
21-Jan-26

© Banner Engineering Corp. All rights reserved.
www.bannerengineering.com

116941
p/n: 116941 Rev. H

ПРОМЭЛЕКТРОНИКА/ sales@prom-elec.com

Specifications

Supply Voltage and Current

Voltage supplied by *Presence*PLUS P4 sensors, if operating at 24 V DC (see sensor manual).

62 x 62 Models: Infrared — 24 V DC at 100 mA max.

80 x 80 Models: 24 V DC at 250 mA max.

All other colors — 24 V DC at 130 mA max.

See the electrical characteristics on the product label.

Connections

300 mm (12 in) cable with a 3-pin M8 male quick-disconnect connector

Construction

Low-carbon steel with black zinc plating, acrylic window

Light Source

LED, see Models table for wavelengths

Illumination

High-intensity ring light

Useful Life

10,000 hours (LED ON time). When operated within specifications, output will decrease less than 30% after 10,000 hours and less than 50% (less than 40% for red and IR models) after 20,000 hours.

Operating Conditions

0 °C to +50 °C (+32 °F to +122 °F)

90% at +50 °C maximum relative humidity (non-condensing)

Certifications

Banner Engineering BV
Park Lane, Culliganlaan 2F bus 3
1831 Diegem, BELGIUM

Dimensions

All measurements are listed in millimeters [inches], unless noted otherwise. The measurements provided are subject to change.

62 × 62 mm Models

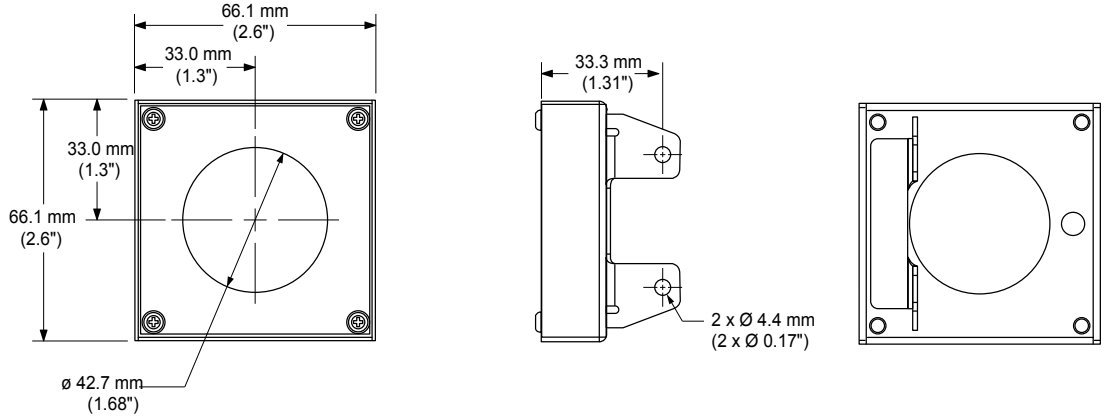

80 x 80 mm Models

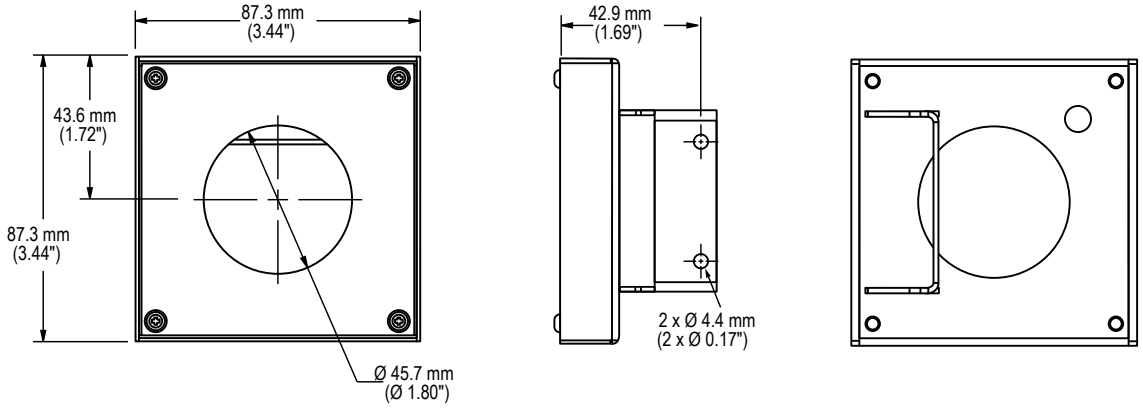

Clean the Light

Regularly remove dust, dirt, or fingerprints from the light source.

1. Blow off dust using anti-static compressed air.
2. If necessary, use a lens cloth and lens cleaner or window cleaner to wipe off remaining debris.

© Banner Engineering Corp. All rights reserved.
www.bannerengineering.com

IMPORTANT: Do not use any other chemicals for cleaning the light source.

Banner Engineering Corp Limited Warranty

Banner Engineering Corp. warrants its products to be free from defects in material and workmanship for one year following the date of shipment. Banner Engineering Corp. will repair or replace, free of charge, any product of its manufacture which, at the time it is returned to the factory, is found to have been defective during the warranty period. This warranty does not cover damage or liability for misuse, abuse, or the improper application or installation of the Banner product.

THIS LIMITED WARRANTY IS EXCLUSIVE AND IN LIEU OF ALL OTHER WARRANTIES WHETHER EXPRESS OR IMPLIED (INCLUDING, WITHOUT LIMITATION, ANY WARRANTY OF MERCHANTABILITY OR FITNESS FOR A PARTICULAR PURPOSE), AND WHETHER ARISING UNDER COURSE OF PERFORMANCE, COURSE OF DEALING OR TRADE USAGE.

This Warranty is exclusive and limited to repair or, at the discretion of Banner Engineering Corp., replacement. **IN NO EVENT SHALL BANNER ENGINEERING CORP. BE LIABLE TO BUYER OR ANY OTHER PERSON OR ENTITY FOR ANY EXTRA COSTS, EXPENSES, LOSSES, LOSS OF PROFITS, OR ANY INCIDENTAL, CONSEQUENTIAL OR SPECIAL DAMAGES RESULTING FROM ANY PRODUCT DEFECT OR FROM THE USE OR INABILITY TO USE THE PRODUCT, WHETHER ARISING IN CONTRACT OR WARRANTY, STATUTE, TORT, STRICT LIABILITY, NEGLIGENCE, OR OTHERWISE.**

Banner Engineering Corp. reserves the right to change, modify or improve the design of the product without assuming any obligations or liabilities relating to any product previously manufactured by Banner Engineering Corp. Any misuse, abuse, or improper application or installation of this product or use of the product for personal protection applications when the product is identified as not intended for such purposes will void the product warranty. Any modifications to this product without prior express approval by Banner Engineering Corp will void the product warranties. All specifications published in this document are subject to change; Banner reserves the right to modify product specifications or update documentation at any time. Specifications and product information in English supersede that which is provided in any other language. For the most recent version of any documentation, refer to: www.bannerengineering.com.

For patent information, see www.bannerengineering.com/patents.

Mexican Importer

Banner Engineering de Mèxico, S. de R.L. de C.V. | David Alfaro Siqueiros 103 Piso 2 Valle oriente | San Pedro Garza Garcia Nuevo Leòn, C. P. 66269

81 8363.2714

© Banner Engineering Corp. All rights reserved.
www.bannerengineering.com