EZ-LIGHT® Indicators for RP Rope Pull Switches and SI Interlocking Switches

Features

PNP DC-Operated LED Indicators with One or Two Colors



- Designed to provide switch status information
- M20 × 1.5 threaded polycarbonate base
- Translucent polycarbonate dome
- 130 mm (5 in) flying lead wires
- Fully encapsulated IP67, IP69K per ISO 20653

Models

Model Number	Color	For Use With
SI-K30LYRX7P	Yellow, Red[1]	RP-RM83F-xxLTE/-xxLRE (with tension alarm output)
SI-K30LGRX7P	Green, Red[1]	SI-series interlocks with N.O. contact, RP-LM40.., RP-LS42F.., RP-QM90F.., RP-QM(T)72.., RP-RM83F.., SI-LS31.., SI-LS100, SI-QS90.., SI-LM40.., SI-LS42.., SI-QM100
SI-K30LRXX7P	Red	

Specifications

Color Key

Wire Color	V DC	Light Color
Brown	+24	Yellow or Green
Black	+24	Red (overrides yellow/green)
Blue	0	n/a

Supply Voltage and Current

10 V DC to 30 V DC at 30 mA maximum

Indicators

Entire translucent diffuser or dome provides indication.

Input Response Time

Indicator ON/OFF: 1 ms maximum

Construction

Base: polycarbonate, M20 × 1.5 threaded
Translucent dome: polycarbonate

Connections

130 mm (5 in) flying lead wires

Environmental Rating

Fully encapsulated IP67, IP69K if the cable and cable entrance are protected from high-pressure spray.

Operating Conditions

–40 °C to +50 °C (–40 °F to +122 °F)

Certifications

Banner Engineering BV
Park Lane, Culliganlaan 2F bus 3
1831 Diegem, BELGIUM

Dimensions

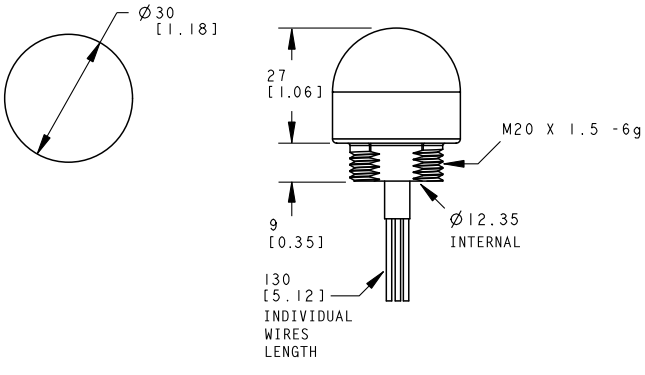

[1] +24 V DC applied to the black wire (Red) overrides (turns OFF) Yellow/Green

Original Instructions
23-Jun-25

© Banner Engineering Corp. All rights reserved.
www.bannerengineering.com

171472
p/n: 171472 Rev. B

ПРОМЭЛЕКТРОНИКА/ sales@prom-elec.com

Wiring

SI-K30LYRX7P

RP-RM83F-xxLTE/-xxLRE (shown):

Brown = Terminal 2; Indication = YELLOW/Tension Alarm

Black = Terminal 24; Indication = RED/Stop

Blue = Terminal 3 and 0 V DC

+24 V DC= Terminal 1 and Terminal 23

NOTE: Armed (RUN) = OFF

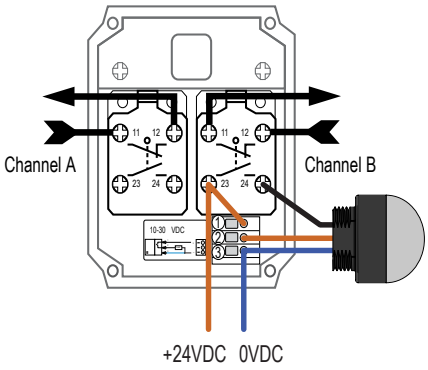

SI-K30LGRX7P

RP-LS42F Hookup (shown):

Brown = +24 V DC and Terminal 14; Indication = GREEN/Armed (RUN)

Black = Terminal 13; Indication = RED/Stop

Blue = 0 V DC

RP-RM83F Hookup (without Tension Alarm):

Brown = +24 V DC and Terminal 23; Indication = GREEN/Armed (RUN)

Black = Terminal 24; Indication = RED/Stop

Blue = 0 V DC

SI-series Interlocking switches

Brown = +24 V DC and N.O.(a) contact; Indication = GREEN/Armed (RUN)

Black = N.O.(b) contact; Indication = RED/Stop

Blue = 0 V DC

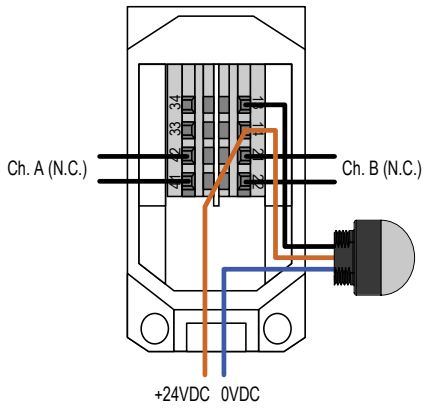

SI-K30LRXX7P

RP-LS42F Hookup (shown):

+24 V DC = Terminal 14

Black = Terminal 13; Indication = RED/Stop

Blue = 0 V DC

NOTE: Armed (RUN) = OFF

RP-RM83F Hookup (without Tension Alarm):

+24 V DC = Terminal 23

Black = Terminal 24; Indication = RED/Stop

Blue = 0 V DC

NOTE: Armed (RUN) = OFF

SI-series Interlocking switches

+24 V DC = N.O.(a) contact

Black = N.O.(b) contact; Indication = RED/Stop

Blue = 0 V DC

NOTE: Armed (RUN) = OFF

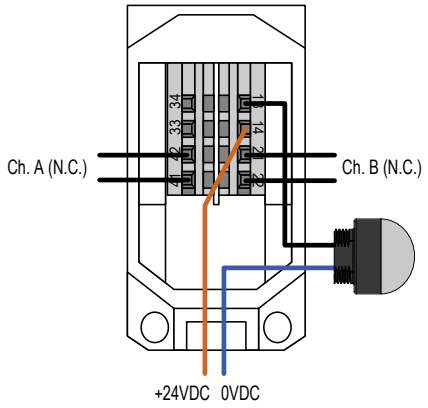

Banner Engineering Corp Limited Warranty

Banner Engineering Corp. warrants its products to be free from defects in material and workmanship for one year following the date of shipment. Banner Engineering Corp. will repair or replace, free of charge, any product of its manufacture which, at the time it is returned to the factory, is found to have been defective during the warranty period. This warranty does not cover damage or liability for misuse, abuse, or the improper application or installation of the Banner product.

THIS LIMITED WARRANTY IS EXCLUSIVE AND IN LIEU OF ALL OTHER WARRANTIES WHETHER EXPRESS OR IMPLIED (INCLUDING, WITHOUT LIMITATION, ANY WARRANTY OF MERCHANTABILITY OR FITNESS FOR A PARTICULAR PURPOSE), AND WHETHER ARISING UNDER COURSE OF PERFORMANCE, COURSE OF DEALING OR TRADE USAGE.

This Warranty is exclusive and limited to repair or, at the discretion of Banner Engineering Corp., replacement. **IN NO EVENT SHALL BANNER ENGINEERING CORP. BE LIABLE TO BUYER OR ANY OTHER PERSON OR ENTITY FOR ANY EXTRA COSTS, EXPENSES, LOSSES, LOSS OF PROFITS, OR ANY INCIDENTAL, CONSEQUENTIAL OR SPECIAL DAMAGES RESULTING FROM ANY PRODUCT DEFECT OR FROM THE USE OR INABILITY TO USE THE PRODUCT, WHETHER ARISING IN CONTRACT OR WARRANTY, STATUTE, TORT, STRICT LIABILITY, NEGLIGENCE, OR OTHERWISE.**

Banner Engineering Corp. reserves the right to change, modify or improve the design of the product without assuming any obligations or liabilities relating to any product previously manufactured by Banner Engineering Corp. Any misuse, abuse, or improper application or installation of this product or use of the product for personal protection applications when the product is identified as not intended for such purposes will void the product warranty. Any modifications to this product without prior express approval by Banner Engineering Corp will void the product warranties. All specifications published in this document are subject to change; Banner reserves the right to modify product specifications or update documentation at any time.

Specifications and product information in English supersede that which is provided in any other language. For the most recent version of any documentation, refer to: www.bannerengineering.com.

For patent information, see www.bannerengineering.com/patents.

© Banner Engineering Corp. All rights reserved.
www.bannerengineering.com