# QM42-DPSx-2Q Differential Pressure Sensor

## Features

The differential pressure sensor offers accurate low-differential pressure measurement of air and non-condensing, non-corrosive gases in applications such as air filter monitoring, isolation and clean rooms, building pressurization and dust collectors.



- Silicon piezoresistive differential pressure core
- Aluminum alloy housing
- Senses up to ±1 inches of water column using the **QM42-DPS1-2Q** model
- Senses up to ±5 inches of water column using the **QM42-DPS5-2Q** model
- Senses up to ± 20 inches of water column using the **QM42-DPS20-2Q** model
- RS-485 Modbus serial communication

## Models

| Model | Description | Interface | Connection |
|---|---|---|---|
| **QM42-DPS1-2Q** | Differential Pressure Sensor ±1 in w.c. and 10 ft of tubing | RS-485 Modbus | 2.09 m (6.9 ft) cable with a 5-pin M12 quick disconnect (QD) connector |
| **QM42-DPS5-2Q** | Differential Pressure Sensor ±5 in w.c. and 10 ft of tubing | | |
| **QM42-DPS20-2Q** | Differential Pressure Sensor ±20 in w.c. and 10 ft of tubing | | |

## Wiring

This sensor is designed for use as a Modbus server. This sensor can be plugged into any Modbus RS-485 network, compatible MultiHop Data Radio, or DXMR90 Series Controller. Flying lead models use the listed wire colors and sensor connections.

*Wiring*

| 5-pin M12 Male Connector | Pin | Wire Color | Sensor Connection |
|---|---|---|---|
| 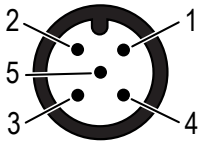 | 1 | brown (bn) | Power IN (+): 10 to 30 V DC |
| | 2 | white (wh) | RS485 / D1 / B / + |
| | 3 | blue (bu) | Ground (-) |
| | 4 | black (bk) | RS485 / D0 / A / – |
| | 5 | gray (gr) | Not Used |



## Holding Registers

*Holding registers for the **QM42-DPS1-2Q** model*

| Modbus Register | Output | I/O Range | | Holding Register Representation | | Measured Results |
|---|---|---|---|---|---|---|
| | | Minimum | Maximum | Minimum (Decimal) | Maximum (Decimal) | |
| 1 | Pressure (Inches of Water) | -1 | 1 | -1000 | 1000 | Register value ÷ 1000 |
| 2 | Pressure (PSI) | -0.036 | 0.036 | -36 | 36 | Register value ÷ 1000 |
| 3 | Temperature (F) | -40 | 221 | -4000 | 22100 | Register value ÷ 100 |
| 4 | Temperature (C) | -40 | 105 | -4000 | 10500 | Register value ÷ 100 |
| 5 | Pressure (Pa) | -248 | 248 | -248 | 248 | Register value |
| 1201 | Pressure Sample Interval | 0 | 65000 | 0 | 65000 | |
| 1202 | Temperature Sample Interval | 0 | 65000 | 0 | 65000 | |
| 6101 | Baud | 0=9.6k, 1=19.2k (default), 2=38.4k | | | | |
| 6102 | Parity | 0=none (default), 1=odd, 2=even | | | | |

Continued on page 2

Original Instructions
01-Sep-26

© Banner Engineering Corp. All rights reserved.
www.bannerengineering.com

226764
p/n: 226764 Rev. D

ПРОМЭЛЕКТРОНИКА/ sales@prom-elec.com

Continued from page 1

| Modbus Register | Output | I/O Range | | Holding Register Representation | | Measured Results |
|---|---|---|---|---|---|---|
| | | Minimum | Maximum | Minimum (Decimal) | Maximum (Decimal) | |
| 6103 | Modbus Server Address | 1 (default) through 247 | | | | |

*Holding registers for the **QM42-DPS5-2Q** model*

| Modbus Register | Output | I/O Range | | Holding Register Representation | | Measured Results |
|---|---|---|---|---|---|---|
| | | Minimum | Maximum | Minimum (Decimal) | Maximum (Decimal) | |
| 1 | Pressure (Inches of Water) | -5 | 5 | -5000 | 5000 | Register value ÷ 1000 |
| 2 | Pressure (PSI) | -0.180 | 0.180 | -180 | 180 | Register value ÷ 1000 |
| 3 | Temperature (F) | -40 | 221 | -4000 | 22100 | Register value ÷ 100 |
| 4 | Temperature (C) | -40 | 105 | -4000 | 10500 | Register value ÷ 100 |
| 5 | Pressure (Pa) | -1244 | 1244 | -1244 | 1244 | Register value |
| 1201 | Pressure Sample Interval | 0 | 65000 | 0 | 65000 | |
| 1202 | Temperature Sample Interval | 0 | 65000 | 0 | 65000 | |
| 6101 | Baud | 0=9.6k, 1=19.2k (default), 2=38.4k | | | | |
| 6102 | Parity | 0=none (default), 1=odd, 2=even | | | | |
| 6103 | Modbus Server Address | 1 (default) through 247 | | | | |

*Holding registers for the **QM42-DPS20-2Q** model*

| Modbus Register | Output | I/O Range | | Holding Register Representation | | Measured Results |
|---|---|---|---|---|---|---|
| | | Minimum | Maximum | Minimum (Decimal) | Maximum (Decimal) | |
| 1 | Pressure (Inches of Water) | -20 | 20 | -20000 | 20000 | Register value ÷ 1000 |
| 2 | Pressure (PSI) | -0.722 | 0.722 | -722 | 722 | Register value ÷ 1000 |
| 3 | Temperature (F) | -40 | 221 | -4000 | 22100 | Register value ÷ 100 |
| 4 | Temperature (C) | -40 | 105 | -4000 | 10500 | Register value ÷ 100 |
| 5 | Pressure (Pa) | -4977 | 4977 | -4977 | 4977 | Register value |
| 1201 | Pressure Sample Interval | 0 | 65000 | 0 | 65000 | |
| 1202 | Temperature Sample Interval | 0 | 65000 | 0 | 65000 | |
| 6101 | Baud | 0=9.6k, 1=19.2k (default), 2=38.4k | | | | |
| 6102 | Parity | 0=none (default), 1=odd, 2=even | | | | |
| 6103 | Modbus Server Address | 1 (default) through 247 | | | | |

The default pressure and temperature sample intervals are 5 seconds (holding register value of 80). The holding register values increment the sample rate in intervals of 62.5 ms.

# Installing the Pressure Sensor

The pressure sensor can be mounted to any surface using fasteners sized for the 1/8-inch (3.2 mm) diameter through-holes on the base of the unit. The optional **BWA-BK-001** bracket may be used for mounting to a magnetic surface.

The supplied tubing has an 1/8 inch inner diameter and is intended to fit the barbed fittings on the high (+) and low (-) pressure ports. Cut the tubing to the length required, but for the best results, keep the tubing as short as possible. Install the high (+) side to the upstream or high-line pressure and install the low (-) side to downstream or low-line pressure.

# Specifications

**Supply Voltage**
10 V DC to 30 V DC

**Current Consumption**
< 3 mA

**Pressure Range**
**QM42-DPS1-2Q**: ±1 inches water column (wc)
**QM42-DPS5-2Q**: ±5 inches water column (wc)
**QM42-DPS20-2Q**: ±20 inches water column (wc)


© Banner Engineering Corp. All rights reserved.
www.bannerengineering.com

**Output**
RS-485 Serial

**Accuracy**
0.2% full scale

**Proof and Burst Pressure**
**QM42-DPS1-2Q**: Proof Pressure: 100× Maximum Operating Pressure
**QM42-DPS1-2Q**: Burst Pressure: 300× Maximum Operating Pressure
**QM42-DPS5-2Q**: Proof Pressure: 40× Maximum Operating Pressure
**QM42-DPS5-2Q**: Burst Pressure: 60× Maximum Operating Pressure
**QM42-DPS20-2Q**: Proof Pressure: 10× Maximum Operating Pressure
**QM42-DPS20-2Q**: Burst Pressure: 25× Maximum Operating Pressure

**Stability**
≤ 0.2% full scale per year

**Communication Hardware**
Interface: RS-485 Serial
Baud rates: 9.6k, 19.2k (default), or 38.4k
Data format: 8 data bits, no parity (default, 1 stop bit)
Active Communications Current: 2.95 mA at 30 V DC
Protocol: RS-485 Modbus RTU

**Pressure Interface**
Dual barbed ports

**Temperature**
Compensated: –20 °C to +85 °C (–4 °F to +185 °F)
Operating: –25 °C to +85 °C (–13 °F to +185 °F)

**Indicators**
Green flashing: Power ON
Amber flashing: Serial Tx

**Measuring Media**
Gaseous

**Electrical Connection**
Conduit fitting with cable

**Included PVC Tubing**
Inner diameter: 0.125 in
Outer diameter: 0.25 in
Length: 10 ft

**Connection**
2.09 m (6.9 ft) cable with a 5-pin M12 male quick disconnect

**Construction**
Black anodized aluminum alloy

**Zero/Span Offset Tolerance**
Zero temperature drift
± 0.5% full scale per °C
Humidity Limits (non-condensing) 0 to 95% RH

## Dimensions

All measurements are listed in millimeters [inches], unless noted otherwise. The measurements provided are subject to change.

*Dimensions*

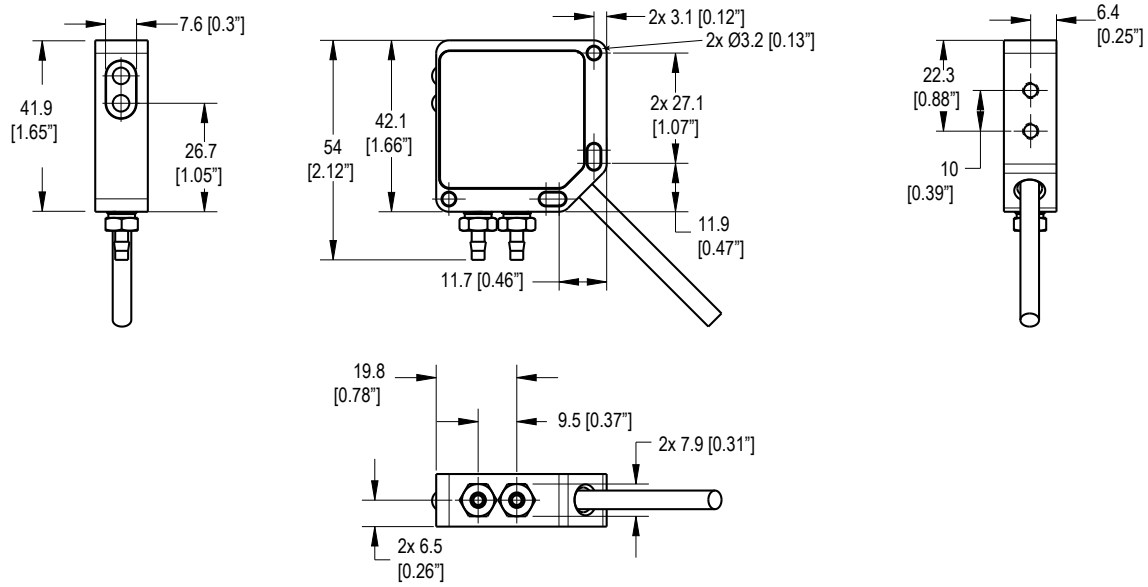



© Banner Engineering Corp. All rights reserved.
www.bannerengineering.com

# Accessories

Bracket BWA-BK-005 is included with the QM42-DPSx-2Q sensor.

**BWA-BK-001**

- Includes magnetic mounting bracket **SMB42FLM12** and 2 mounting screws
- CAD Files: DXF, PDF, IGS, STP

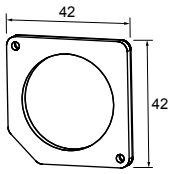


**BWA-BK-005**

- Use when measuring high-frequency vibrations or when mounting the sensor to curved surfaces
- Includes **SMB42FLAT** stainless steel bracket, 1/4"-28 screw mount, and one piece of 3M™ thermally conductive adhesive transfer tape
- CAD Files: DXF, PDF, IGS, STP

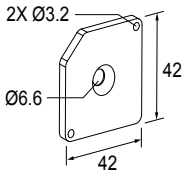


**BWA-M12CAB-MAG**

- Magnetic bracket to manage Banner M12 cables
- 34 mm x 19 mm overall
- CAD Files: DXF, PDF, IGS, STP

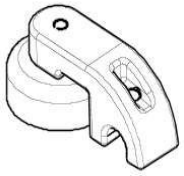

**BWA-DPS-PROBE**

- Duct pressure probe with 2-inch length hose barb
- 38 mm diameter flange mount



**BWA-TUBE-001** Tubing

- Clear PVC Durometer 65A
- Max Pressure 60 PSI at 70°F
- 10 ft long, 1/8 in ID, 1/4 in OD

# Banner Engineering Corp Limited Warranty

Banner Engineering Corp. warrants its products to be free from defects in material and workmanship for one year following the date of shipment. Banner Engineering Corp. will repair or replace, free of charge, any product of its manufacture which, at the time it is returned to the factory, is found to have been defective during the warranty period. This warranty does not cover damage or liability for misuse, abuse, or the improper application or installation of the Banner product.

**THIS LIMITED WARRANTY IS EXCLUSIVE AND IN LIEU OF ALL OTHER WARRANTIES WHETHER EXPRESS OR IMPLIED (INCLUDING, WITHOUT LIMITATION, ANY WARRANTY OF MERCHANTABILITY OR FITNESS FOR A PARTICULAR PURPOSE), AND WHETHER ARISING UNDER COURSE OF PERFORMANCE, COURSE OF DEALING OR TRADE USAGE.**

This Warranty is exclusive and limited to repair or, at the discretion of Banner Engineering Corp., replacement. **IN NO EVENT SHALL BANNER ENGINEERING CORP. BE LIABLE TO BUYER OR ANY OTHER PERSON OR ENTITY FOR ANY EXTRA COSTS, EXPENSES, LOSSES, LOSS OF PROFITS, OR ANY INCIDENTAL, CONSEQUENTIAL OR SPECIAL DAMAGES RESULTING FROM ANY PRODUCT DEFECT OR FROM THE USE OR INABILITY TO USE THE PRODUCT, WHETHER ARISING IN CONTRACT OR WARRANTY, STATUTE, TORT, STRICT LIABILITY, NEGLIGENCE, OR OTHERWISE.**

Banner Engineering Corp. reserves the right to change, modify or improve the design of the product without assuming any obligations or liabilities relating to any product previously manufactured by Banner Engineering Corp. Any misuse, abuse, or improper application or installation of this product or use of the product for personal protection applications when the product is identified as not intended for such purposes will void the product warranty. Any modifications to this product without prior express approval by Banner Engineering Corp will void the product warranties. All specifications published in this document are subject to change; Banner reserves the right to modify product specifications or update documentation at any time. Specifications and product information in English supersede that which is provided in any other language. For the most recent version of any documentation, refer to: www.bannerengineering.com.

For patent information, see www.bannerengineering.com/patents.


© Banner Engineering Corp. All rights reserved.
www.bannerengineering.com