BT1xS and BT2xS Series Glass Fibers

BT1xS and BT2xS Series Glass Fibers

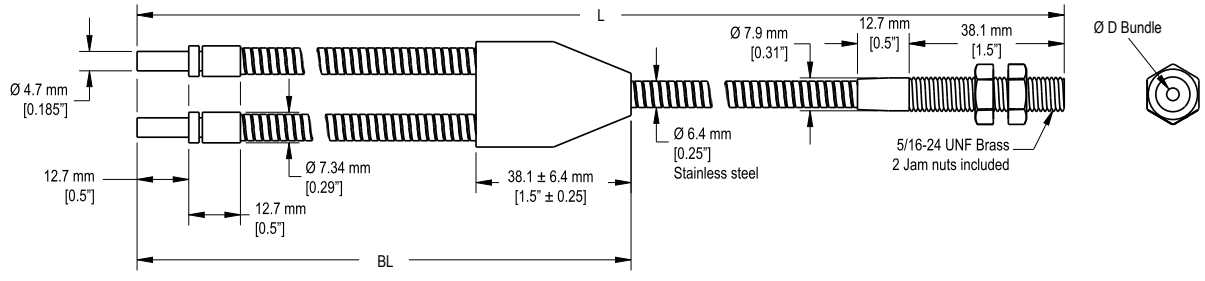

CAD files: DXF, PDF, IGS, STP

Model	L (in)	BL (in)	D (in)
BT.753S	36	7.5 ± 0.5	0.046
BT.756S	72	7.5 ± 0.5	0.046
BT12S	24	7.5 ± 0.5	0.062
BT13S	36	7.5 ± 0.5	0.062
BT13SM900	36	7.5 ± 0.5	0.062
BT14S	48	7.5 ± 0.5	0.062
BT15S	60	7.5 ± 0.5	0.062
BT16S	72	7.5 ± 0.5	0.062
BT21S	12	7.5 ± 0.5	0.125
BT21.3S	15	7.5 ± 0.5	0.125
BT21.5S	18	7.5 ± 0.5	0.125
BT21.5SM900	18	7.5 ± 0.5	0.125
BT22S	24	7.5 ± 0.5	0.125
BT23S	36	7.5 ± 0.5	0.125
BT23SM600	36	7.5 ± 0.5	0.125
BT23SM900	36	7.5 ± 0.5	0.125
BT24S	48	7.5 ± 0.5	0.125
BR24.5S	54	7.5 ± 0.5	0.125
BT24SM900	48	7.5 ± 0.5	0.125
BT25S	60	7.5 ± 0.5	0.125
BT25SM900	60	7.5 ± 0.5	0.125
BT26S	72	7.5 ± 0.5	0.125
BT26SM600	72	7.5 ± 0.5	0.125
BT26SM900	72	7.5 ± 0.5	0.125
BT27S	84	7.5 ± 0.5	0.125
BT28S	96	7.5 ± 0.5	0.125
BT29S	108	7.5 ± 0.5	0.125
BT210S	120	7.5 ± 0.5	0.125
BT210SM600	120	7.5 ± 0.5	0.125
BT210SM900	120	7.5 ± 0.5	0.125

Continued on page 2

Original Instructions
12-Aug-26

© Banner Engineering Corp. All rights reserved.
www.bannerengineering.com

b_51965812
p/n: b_51965812 Rev. B

ПРОМЭЛЕКТРОНИКА/ sales@prom-elec.com

Continued from page 1

Model	L (in)	BL (in)	D (in)
BT212S	144	7.5 ± 0.5	0.125
BT214SM900	168	7.5 ± 0.5	0.125
BT215S	180	7.5 ± 0.5	0.125
BT217S	204	7.5 ± 0.5	0.125
BT220S	240	7.5 ± 0.5	0.125
BT220SM900	240	7.5 ± 0.5	0.125
BT225SM600	300	7.5 ± 0.5	0.125
BT230SM600	360	7.5 ± 0.5	0.125

An M900 suffix at the end of a part number indicates a fiber bundle fused together on the threaded end (no epoxy used). The maximum operating temperature is 900 °F.

BT16SMTGRMLSD and BT16SMTGRSSLLD Glass Fibers

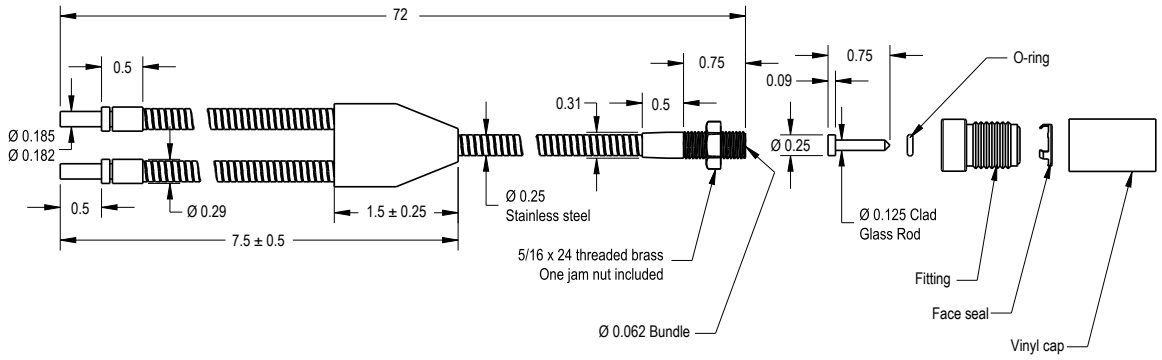

BT2.5xx Series Glass Fibers

BT2.5xS Glass Fibers

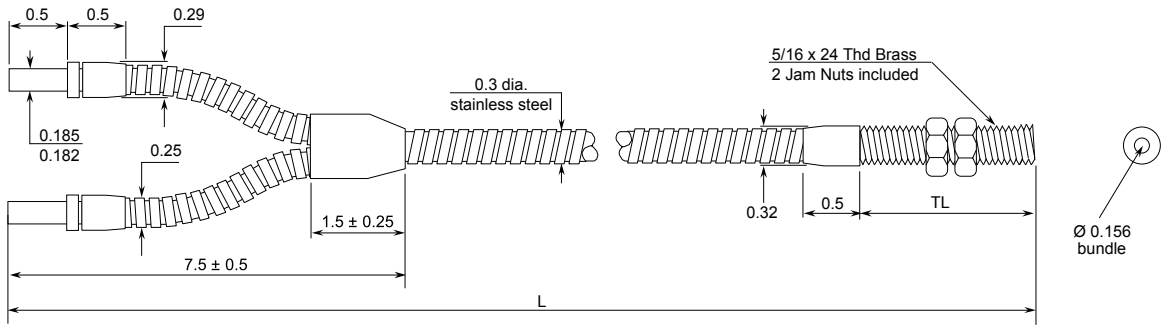

Model	TL (in)	L (in)
BT2.52S	1.5	24
BT2.53S	1.5	36
BT2.53SM900	1.5	36

An M900 suffix at the end of a part number indicates a fiber bundle fused together on the threaded end (no epoxy used). The maximum operating temperature is 900 °F.

© Banner Engineering Corp. All rights reserved.
www.bannerengineering.com

BT2.5xP Series Glass Fibers

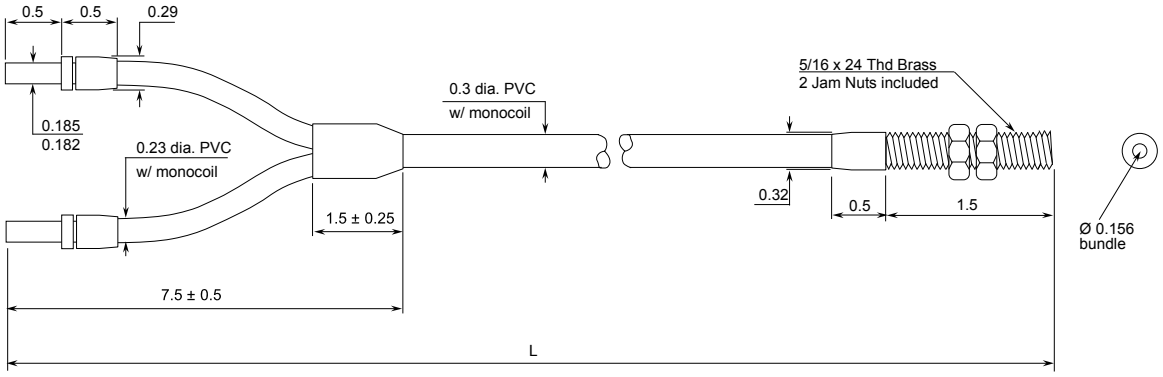

Model	L (in)
BT2.53P	36

BTxxP Series Glass Fibers

BT1xP and BT2xP Series Fibers

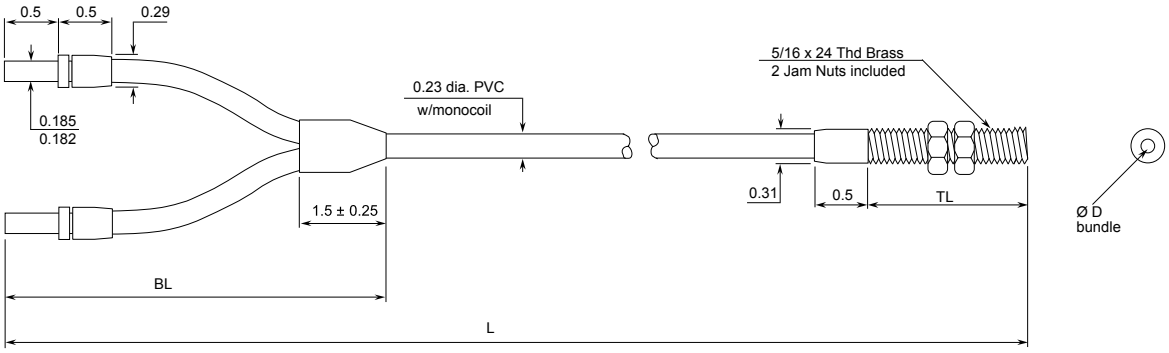

Model	BL (in)	L (in)	TL (in)	D (in)
BT13P	7.5 ± 1.5	36	1.5	0.062
BT23P	7.5 ± 1.5	36	1.5	0.125
BT26P	7.5 ± 1.5	72	1.5	0.125
BT210P	7.5 ± 1.5	120	1.5	0.125

© Banner Engineering Corp. All rights reserved.
www.bannerengineering.com

BT1xxx Series Glass Fibers

BT1.13.3ST5M6 Glass Fiber

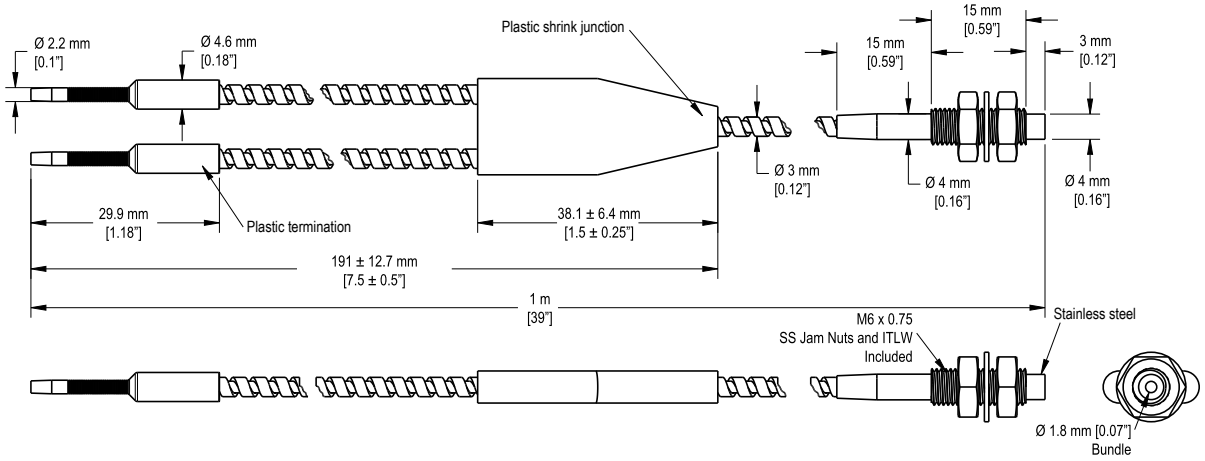

BT1.56ST5M900 Diffuse Mode Glass Fiber

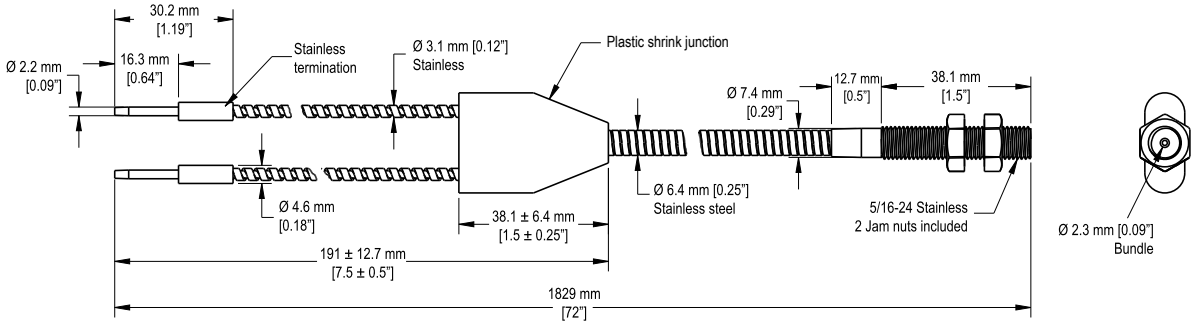

BT1.8SMBL3.5 Fiber

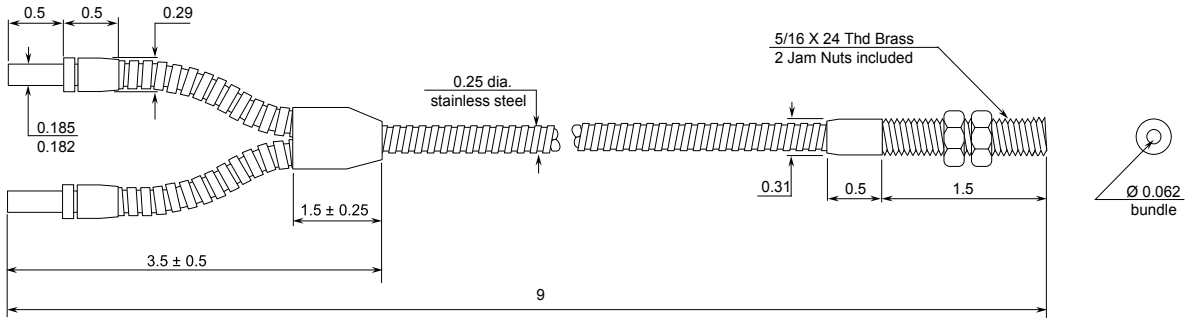

BT13.5ST5 Fiber

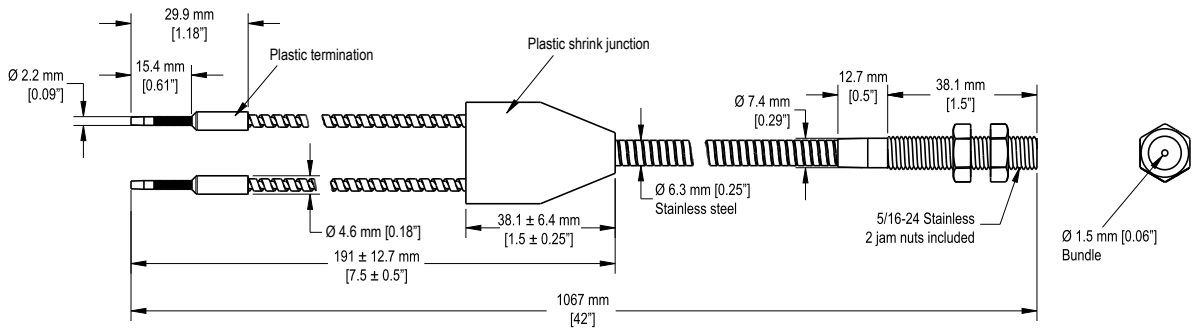

An M900 suffix at the end of a part number indicates a fiber bundle fused together on the threaded end (no epoxy used). The maximum operating temperature is 900 °F.

© Banner Engineering Corp. All rights reserved.
www.bannerengineering.com

BTxxPMSS Fibers

BTxxPMSS Fibers

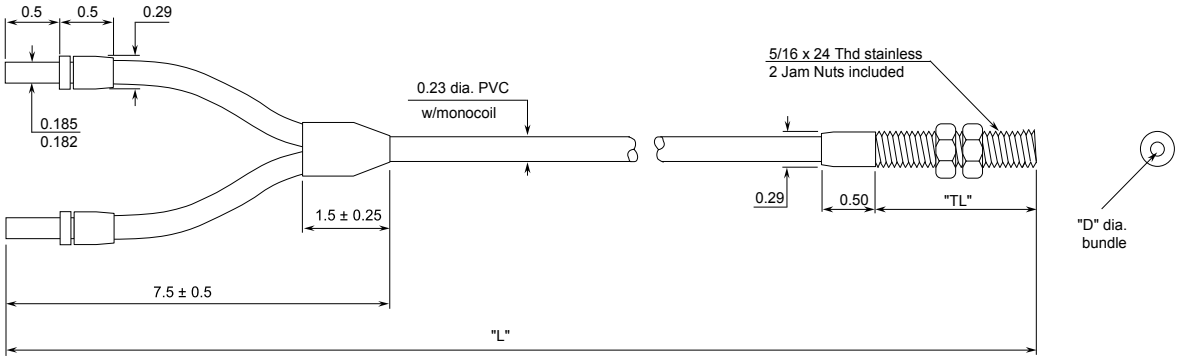

Model	TL (in)	L (in)	D (in)
BT13PMSS	1.5	36	0.062
BT23PMSS	1.5	36	0.125
BT210PMSS	1.5	120	0.125

BT2xxSM6 and SM8 Fibers

BT23SM6 Glass Fibers

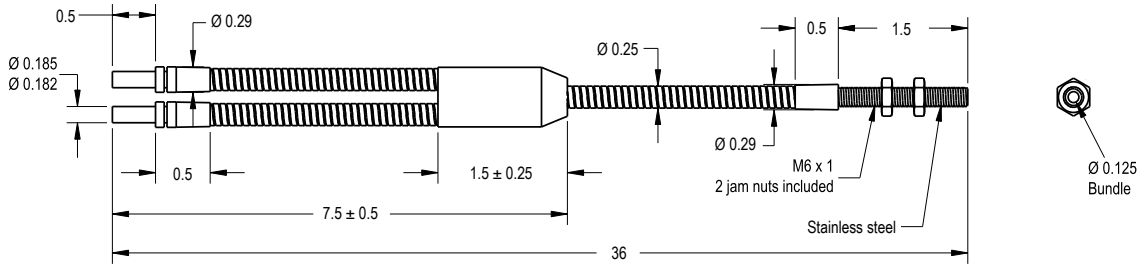

BT2xxSM8 Fibers

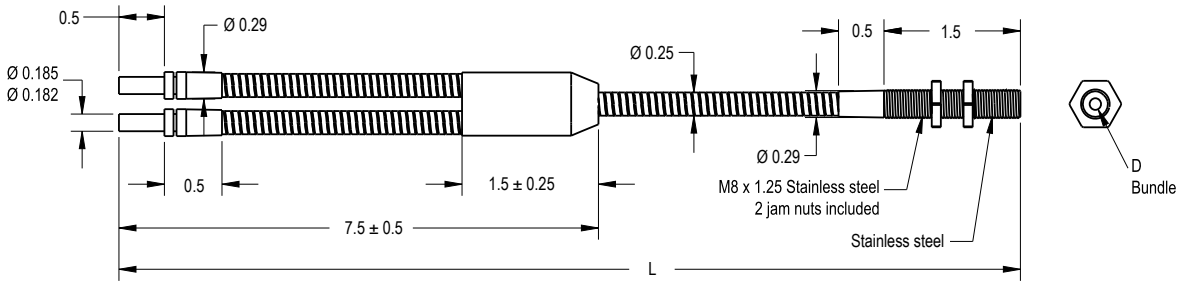

Model	L (in)	D (in)
BT13SM8	36	0.062
BT23SM8	36	0.125
BT26SM8	72	0.125
BT28SM8	96	0.125
BT210SM8M900	120	0.125
BT212SM8M900	144	0.125

An M900 suffix at the end of a part number indicates a fiber bundle fused together on the threaded end (no epoxy used). The maximum operating temperature is 900 °F.

© Banner Engineering Corp. All rights reserved.
www.bannerengineering.com

BTxxSMSS Fibers

BTxxSMSS Fibers

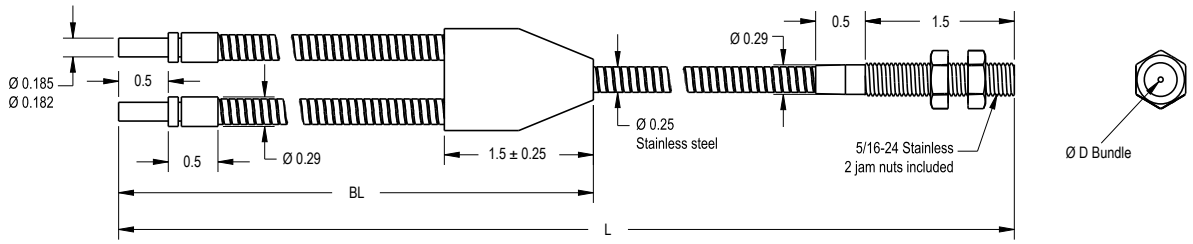

Model	BL (in)	L (in)	D (in)
BT23SMSS	7.5 ± 0.5	36	0.125
BT25SMSS	7.5 ± 0.5	60	0.125
BT26SMSS	7.5 ± 0.5	72	0.125
BT210SMSS	7.5 ± 0.5	120	0.125
BT215SMSS	7.5 ± 0.5	180	0.125
BT220SMSS	7.5 ± 0.5	240	0.125

BT2xxSMVF Fibers

BT2xxSMVF Fibers

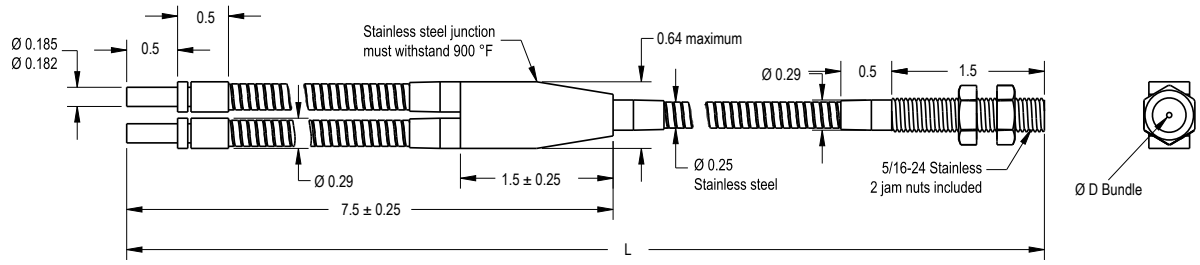

Model	L (in)	D (in)
BT25SMVF	60	0.125
BT28SMVF	96	0.125
BT210SMVF	120	0.125
BT213.2SMVF	158	0.125

© Banner Engineering Corp. All rights reserved.
www.bannerengineering.com

BTxxLMNC Series Glass Fibers

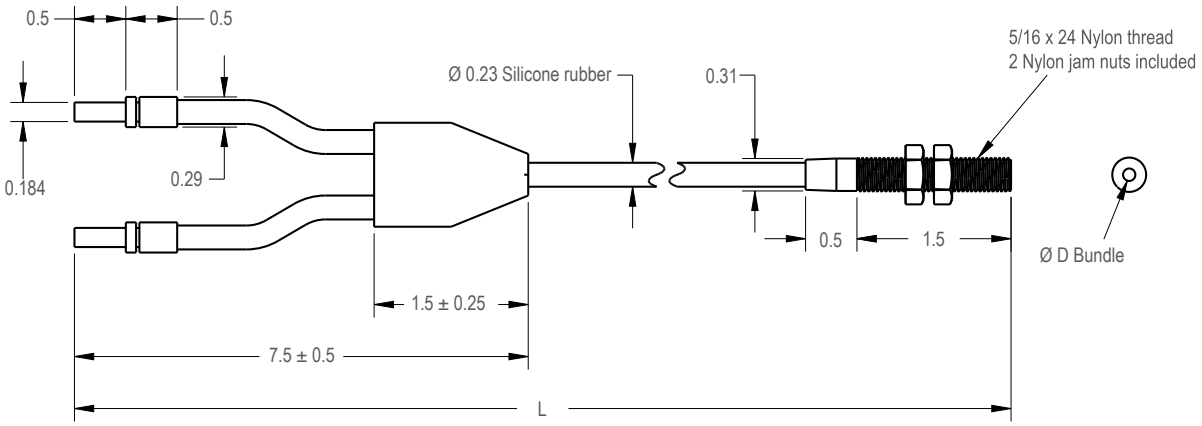

Model	L (in)	D (in)
BT23LMNC	36	0.125
BT26LMNC	72	0.125

BT26SM600MHF Glass Fibers

BT26SM600MHF Series

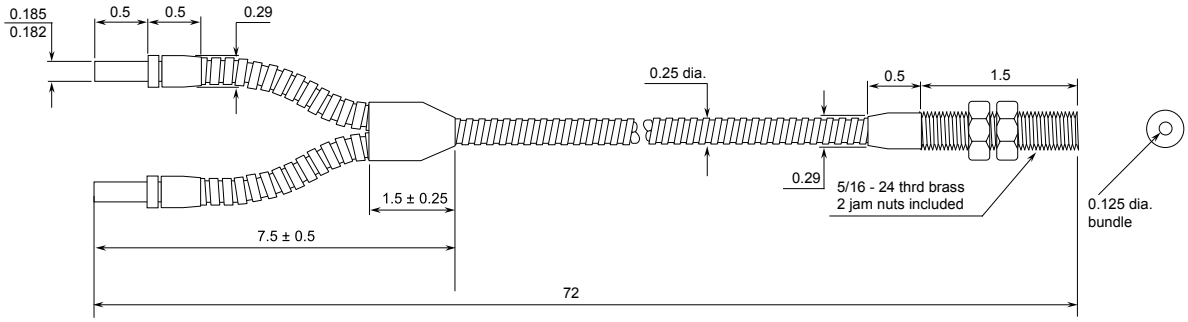

The **HF** in the model number indicates a high-flex fiber. The **M600** designates a threaded end potted in epoxy that will withstand up to 600 °F.

BT6xST5-VL Series Glass Fibers

BT6xST5-VL Series Glass Fibers

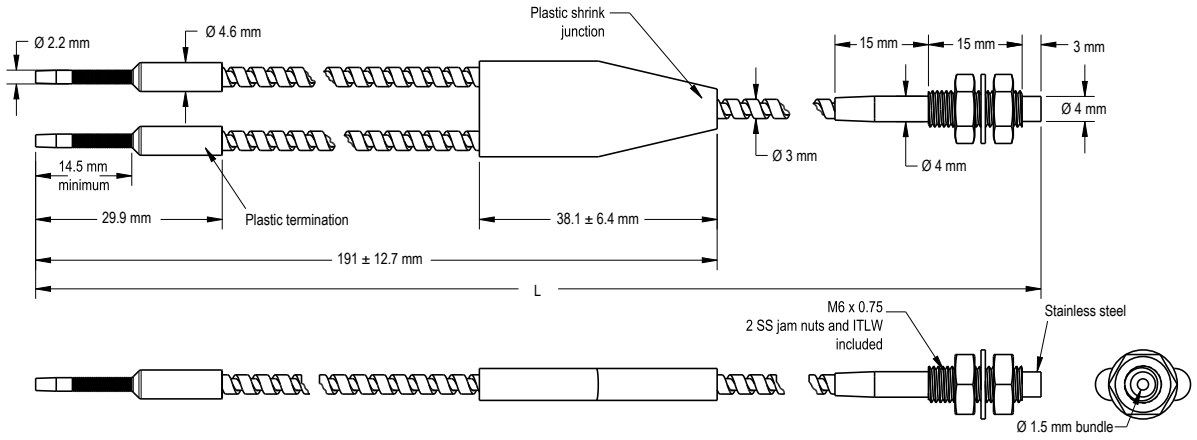

© Banner Engineering Corp. All rights reserved.
www.bannerengineering.com

Model	CAD Files	L (mm)
BT63ST5-VL	CAD files: DXF, PDF, IGS, STP	1000
BT66ST5-VL		2000

Operating Temperature
-140 to 249 °C

Minimum Bend Radius
25 mm

© Banner Engineering Corp. All rights reserved.
www.bannerengineering.com