MODEL NO.	"L"	P/N
IR222S	264	00000
IR29S	108	23684
IR27S	84	23085
IR23.2S	38	22975
IR23.33S	40	22976
IR24.2S	50	22977
IR24.8S	57	22978
IR21.5S	18	22966
IR215S	180	22805
IR212S	144	22449
IR2.5S	6	20073
IR210S	120	20858
IR21S	12	20426
IR22S	24	17334
IR24S	48	21187

MODEL NO.	"L"	P/N
IR25S	60	17833
IR26S	72	17982
IR28S	96	20260
IR23S	36	17336

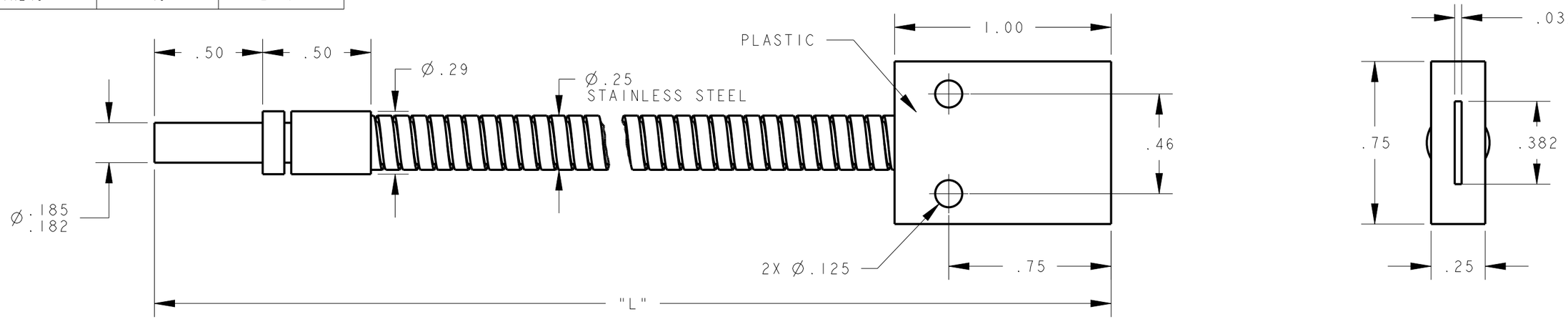

NOTES:
1. ALL DIMENSIONS ARE MILLIMETERS [INCHES] UNLESS OTHERWISE NOTED.
2. REFER TO "www.bannerengineering.com" FOR ADDITIONAL DATA AND SPECIFICATIONS.

This drawing is the property of BANNER ENGINEERING CORP. Any use or reproduction, in any form, without prior written permission of Banner is prohibited.
© 2015 Banner Engineering Corp.

THIRD ANGLE PROJECTION

BANNER ENGINEERING CORP.
www.bannerengineering.com

TITLE

IR2 SERIES SS TERMINATED

SIZE	DRAWING NO.	REV.
B	161918	A
SCALE 2:1	SHEET 1 OF 1	

CREO

ПРОМЭЛЕКТРОНИКА/ sales@prom-elec.com