MODEL NO.	"L"	P/N
IA.86ST5ETA	1829 [72]	00000
IA.84ST5ETA	1219 [48]	97408
IA.810ST5ETA	3048 [120]	97031
IA.81.6ST5ETA	483 [19]	810232
IA.81.5ST5ETA	457 [18]	88620
IA.83.3ST5ETA	1000 [39]	24976

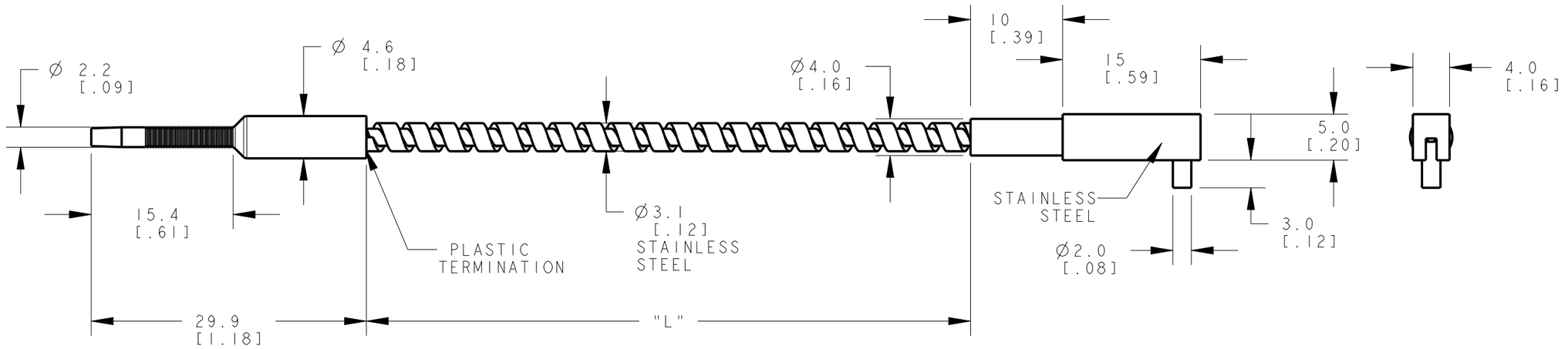

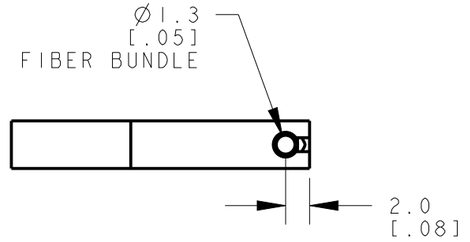

NOTES:
1. ALL DIMENSIONS ARE MILLIMETERS [INCHES] UNLESS OTHERWISE NOTED.
2. REFER TO "www.bannerengineering.com" FOR ADDITIONAL DATA AND SPECIFICATIONS.

This drawing is the property of BANNER ENGINEERING CORP. Any use or reproduction, in any form, without prior written permission of Banner is prohibited.
© Banner Engineering Corp.

THIRD ANGLE PROJECTION

BANNER ENGINEERING CORP.
www.bannerengineering.com

TITLE

IA.8 SERIES SS EXTRA TIGHT ANGLE TERMINATED

SIZE	DRAWING NO.	REV.
B	161870	B
SCALE 2:1		SHEET 1 OF 1

CREO

ПРОМЭЛЕКТРОНИКА/ sales@prom-elec.com