Linear Array Replacement Window Kits

For Use With IP50 Linear Array Lights, models LED..LA...X..

Models

Clear Glass	Clear Acrylic	Clear Diffusing Acrylic	White Diffusing Acrylic
LEDLA...XW-G	LEDLA...XW-P	LEDLA...XCDW-P	LEDLA...XWDW-P

Installing the Replacement Window

1. Remove the eight screws securing the two end caps, and remove the end caps.
2. Slide the window out of the housing.
3. Remove the protective sleeve from the new window.

> **NOTE:** Take care not to touch the inside surface of the window; hold it by the edges only. If necessary, clean the window using lens or window cleaner.

4. Slide the new window into place with the black strips facing down. Center the window on the housing.
5. Trim off the ends of the black strips so they are flush with the housing.
6. Replace the end caps and secure them with the eight screws.

Key	Description
1	Screws
2	End cap
3	Replacement window
4	Housing
5	QD end cap

Installing the replacement window on the light

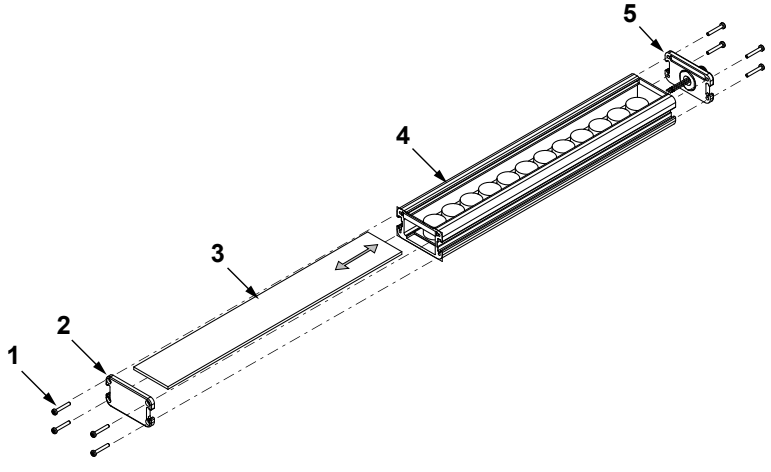

Banner Engineering Corp Limited Warranty

Banner Engineering Corp. warrants its products to be free from defects in material and workmanship for one year following the date of shipment. Banner Engineering Corp. will repair or replace, free of charge, any product of its manufacture which, at the time it is returned to the factory, is found to have been defective during the warranty period. This warranty does not cover damage or liability for misuse, abuse, or the improper application or installation of the Banner product.

THIS LIMITED WARRANTY IS EXCLUSIVE AND IN LIEU OF ALL OTHER WARRANTIES WHETHER EXPRESS OR IMPLIED (INCLUDING, WITHOUT LIMITATION, ANY WARRANTY OF MERCHANTABILITY OR FITNESS FOR A PARTICULAR PURPOSE), AND WHETHER ARISING UNDER COURSE OF PERFORMANCE, COURSE OF DEALING OR TRADE USAGE.

This Warranty is exclusive and limited to repair or, at the discretion of Banner Engineering Corp., replacement. **IN NO EVENT SHALL BANNER ENGINEERING CORP. BE LIABLE TO BUYER OR ANY OTHER PERSON OR ENTITY FOR ANY EXTRA COSTS, EXPENSES, LOSSES, LOSS OF PROFITS, OR ANY INCIDENTAL, CONSEQUENTIAL OR SPECIAL DAMAGES RESULTING FROM ANY PRODUCT DEFECT OR FROM THE USE OR INABILITY TO USE THE PRODUCT, WHETHER ARISING IN CONTRACT OR WARRANTY, STATUTE, TORT, STRICT LIABILITY, NEGLIGENCE, OR OTHERWISE.**

Banner Engineering Corp. reserves the right to change, modify or improve the design of the product without assuming any obligations or liabilities relating to any product previously manufactured by Banner Engineering Corp. Any misuse, abuse, or improper application or installation of this product or use of the product for personal protection applications when the product is identified as not intended for such purposes will void the product warranty. Any modifications to this product without prior express approval by Banner Engineering Corp will void the product warranties. All specifications published in this document are subject to change; Banner reserves the right to modify product specifications or update documentation at any time.

Original Instructions
11-Nov-25

© Banner Engineering Corp. All rights reserved.
www.bannerengineering.com

146164
p/n: 146164 Rev. B

ПРОМЭЛЕКТРОНИКА/ sales@prom-elec.com

Specifications and product information in English supersede that which is provided in any other language. For the most recent version of any documentation, refer to: www.bannerengineering.com.

For patent information, see www.bannerengineering.com/patents.

© Banner Engineering Corp. All rights reserved.