MAXI-AMP™ CI3RC2

for SMI Series intrinsically safe sensors

Current Trip Point Module

BANNER
the photoelectric specialist

- **Self-contained current sensing amplifier**
- **Works with intrinsically safe barrier to provide power to Banner SMI Series intrinsically safe DC sensor(s); converts input signal from the sensor to a contact closure**
- **Powers a single sensor or both the emitter and receiver of an opposed mode pair**
- **Powered by 105-130 or 210-250V ac (50/60Hz)**
- **Two output devices: SPDT 5 amp electromechanical relay and opto-isolated transistor for logic level dc switching**

The Banner MAXI-AMP model CI3RC2 (p/n 36606) is a self-contained module which converts the current output signal of an SMI Series intrinsically safe sensor to a trip point switch.

Banner SMI Series intrinsically safe sensors carry Factory Mutual Research's rating for use in hazardous areas. Sensors are wired to model CI3RC2 using the two-wire hookup through an intrinsically safe barrier. Refer to the hookups, page 2. The SMI Series sensor sinks ≤10 milliamps in the "OFF" state and ≥20 milliamps in the "ON" state. The CI3RC2 module senses this current change and switches internal relays that may be easily wired to most loads and/or additional control circuitry.

Model CI3RC2 is powered by either 105-130 or 210-250V ac. It supplies dc power to operate a single sensor or both the emitter and receiver of one SMI Series opposed mode sensor pair. The sensor's input to the CI3RC2 is protected against short circuits.

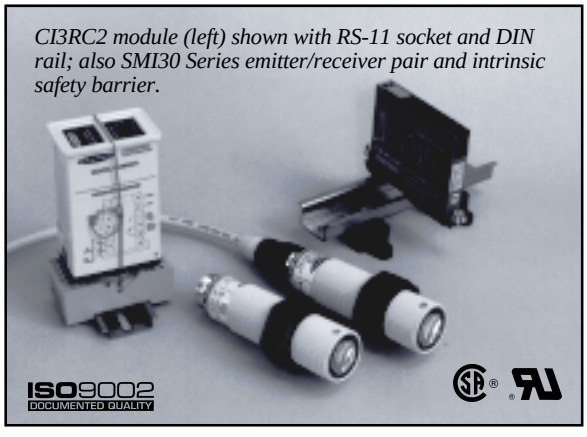

CI3RC2 module (left) shown with RS-11 socket and DIN rail; also SMI30 Series emitter/receiver pair and intrinsic safety barrier.

Built-in circuit diagnostics indicate an input overload by flashing an LED status light.

The MAXI-AMP CI3RC2 module has two isolated output switches. There is a 5-amp rated SPDT electromechanical relay, and a solid-state transistor switch which may be used for logic-level interfaces.

Banner also offers the CI3RC2 Current Trip Point Module as part of a kit. See page 2 for further information. The CI3RC2 may be used with the following Banner Intrinsically Safe sensors: SMI30 Series, SMI912 Series.

SPECIFICATIONS

SUPPLY VOLTAGE: 105 to 130 or 210 to 250V ac, 50/60 Hz (8VA)

OUTPUT CONFIGURATION:
SPDT electromechanical relay:
Contact rating: 250V ac maximum, 24V dc maximum, 5 amps maximum (resistive load), 1/10 HP at 240V ac. Install transient suppressor (MOV) across contacts which switch inductive loads.
Closure time: 10 milliseconds maximum.
Release time: 10 milliseconds maximum.
Maximum switching speed: 20 operations/second.
Mechanical life: 20,000,000 operations
Solid-state dc relay: SPST optically-coupled transistor; 30V dc maximum, 20mA maximum.

EMITTER POWER: +24V dc at 25 mA maximum available at module pin #3.

INPUTS:
Trip point for output "OFF": ≤10 milliamps
Trip point for output "ON": ≥20 milliamps
Trip point range for input overload indication: 30mA ≤ I ≤ 80mA.

INDICATOR LEDs:
OUTPUT "ON" and INPUT overload/short.

OPERATING TEMPERATURE: 0 to 50°C (32 to 122°F).

CONSTRUCTION: rugged NORYL® polyphenylene oxide (PPO®) housing, 1.6" x 2.3" x 4". Standard round-pin 11-pole base. Use RS-11 socket or equivalent.

DIMENSION DRAWING

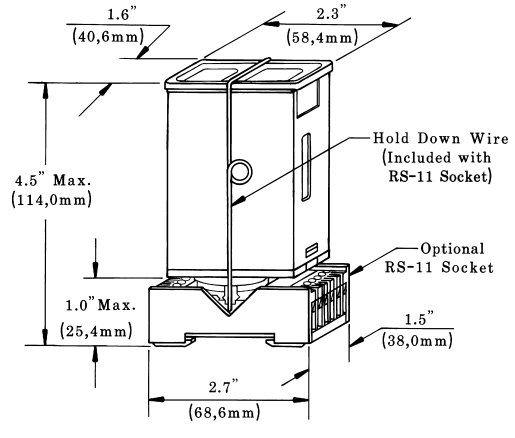

FUNCTIONAL SCHEMATIC

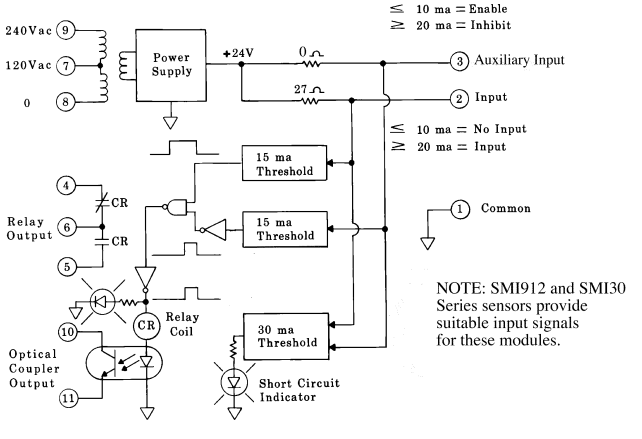

ПРОМЭЛЕКТРОНИКА/ sales@prom-elec.com

GENERALIZED HOOKUP, CI3RC2

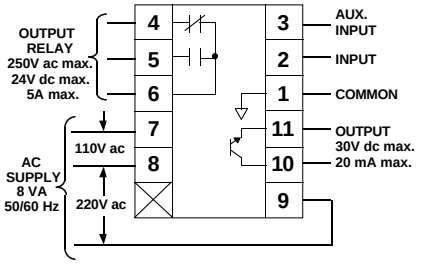

WARNING This photoelectric sensing product does NOT include the self-checking redundant circuitry necessary to allow its use in personnel safety applications. A failure or malfunction can result in *either* an energized or a de-energized output condition.

Never use this product as a sensing device for personnel protection. Its use as a safety device may create an unsafe condition which could lead to serious injury or death.

Only MACHINE-GUARD and PERIMETER-GUARD Systems, and other systems so designated, are designed to meet OSHA and ANSI machine safety standards for point-of-operation guarding devices. No other Banner sensors or controls are designed to meet these standards, and they must NOT be used as sensing devices for personnel protection.

SMI Series sensors are certified intrinsically safe ONLY when used with certified energy-limiting intrinsically-safe barriers. Banner does not itself manufacture intrinsically-safe barriers. Barriers may, however, be purchased from Banner. Kit CI2BK-1 includes one each of the following: single channel barrier, CI3RC2 amplifier, RS-11 socket, DIN rail mount, and a 70 mm DIN rail for mounting the socket. Kit CI2BK-2 provides a dual channel barrier in place of the single channel barrier. Barriers are available separately (below right).

An SMI Series sensor is wired through a barrier using the 2-wire hookup. In the 2-wire hookup configuration, the sensor acts as a current sink, drawing less than 10mA in the OFF state and more than 20mA in the ON state. Model CI3RC2 senses this current change and switches internal relays. The SPDT electromechanical relay in the CI3RC2 can switch a load which draws up to 5 amps (see specifications). The SPST solid-state relay can switch a dc load of up to 30V dc, max.; 20mA, max.

SMI Series emitter-only units also use the 2-wire hookup through a barrier (see hookup diagram "B"). Emitter power (24V dc, 25 mA maximum) is obtained at pin #3. This is sufficient to power *one* emitter.

The user of this equipment is responsible for the proper installation and maintenance of the equipment, and must conform with certification requirements relating to barriers and to maximum allowable capacitance and inductance of field wiring. If you have questions about these requirements, Banner applications engineers can refer you to the proper authority.

HOOKUP DIAGRAM A: Hookup of SMI Series Intrinsically Safe Sensor to CI3RC2

(except emitter - see below)

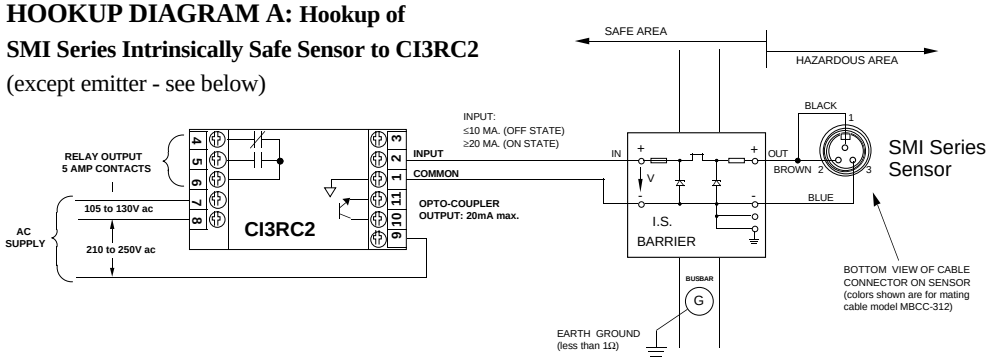

HOOKUP DIAGRAM B: Hookup of SMI Series Intrinsically Safe Emitter/receiver pair to CI3RC2

NOTE: Two single channel barriers may be used in lieu of one dual channel barrier.

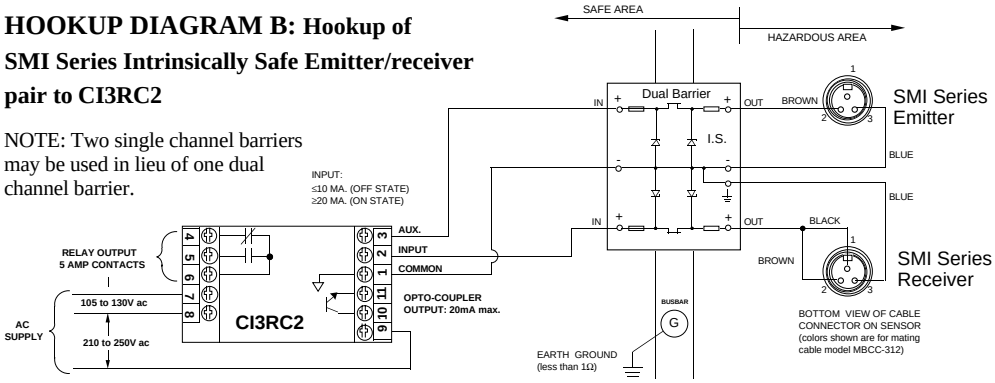

Kits for use with Intrinsically Safe Sensors

Kit CI2BK-1 (p/n 36860), one each:
- Single-channel barrier
- CI3RC2 amplifier
- RS-11 socket
- DIN rail mount
- 70 mm DIN rail

Kit CI2BK-2 (p/n 36605), one each:
- Dual-channel barrier
- CI3RC2 amplifier
- RS-11 socket
- DIN rail mount
- 70 mm DIN rail

Barriers are available separately:

Single channel barrier: **CIB-1** (p/n 27030)

Dual channel barrier: **CI2B-1** (p/n 36865)

WARRANTY: Banner Engineering Corporation warrants its products to be free from defects for a period of one year. Banner Engineering Corporation will repair or replace, free of charge, any product of its manufacture found to be defective at the time it is returned to the factory during the warranty period. This warranty does not cover damage or liability for the improper application of Banner products. This warranty is in lieu of any other warranty either expressed or implied.

Banner Engineering Corp., 9714 10th Ave. No., Minneapolis, MN 55441 Telephone (612) 544-3164 FAX (Applications): (612) 544-3573