T30UX Series with Discrete Output

Important Information

For complete technical information about this product, including installation instructions, application requirements and guidelines, technical specifications, and accessories, go to www.bannerengineering.com and search for the instruction manual, p/n 257922.

Models

Models	Range	Frequency	Cable	Discrete Output	Response Time
T30UXDA	100 mm to 1 m (3.9 in to 39 in)	224 kHz	Standard 2 m (6.5 ft) cable	NPN, PNP, NO, NC, Selectable	45 ms
T30UXDAQ8			4-pin M12 integral QD		
T30UXDAQPMA			150 mm (6 in) PUR pigtail cable with 4-Pin threaded M12 QD		
T30UXDB	200 mm to 2 m (7.8 in to 78 in)	174 kHz	Standard 2 m (6.5 ft) cable		92 ms
T30UXDBQ8QPMA			4-pin M12 integral QD		
T30UXDB			150 mm (6 in) PUR pigtail cable with 4-Pin threaded M12 QD		
T30UXDC	300 mm to 3 m (11.8 in to 118 in)	114 kHz	Standard 2 m (6.5 ft) cable		135 ms
T30UXDCQ8			4-pin M12 integral QD		
T30UXDCQPMA			150 mm (6 in) PUR pigtail cable with 4-Pin threaded M12 QD		

A model with a QD connector requires a mating cable.

Specifications

Sensing Range

"A" suffix models: 100 mm to 1 m (3.9 in to 39 in)
"B" suffix models: 200 mm to 2 m (7.8 in to 78 in)
"C" suffix models: 300 mm to 3 m (11.8 in to 118 in)

Ultrasonic Frequency

"A" suffix models: 224 kHz
"B" suffix models: 174 kHz
"C" suffix models: 114 kHz

Supply Voltage

10 V DC to 30 V DC (10% maximum ripple) at 40 mA, exclusive of load

Supply Protection Circuitry

Protected against reverse polarity and transient voltages

Output Configuration

Discrete (switched) output models: SPST solid-state switch. Configurable as NPN (sinking) or PNP (sourcing) via Mode push button. Normally Open (NO) or Normally Closed (NC) operation is also selectable via Mode push button (see).

The default setting is PNP/NO

Output Rating

Discrete output models: 100 mA max.
OFF-state leakage current: NPN: < 200 µA at 30 V DC (see NOTE 1); **PNP:** < 10 µA at 30 V DC
ON-state saturation voltage: NPN: < 1.6 V at 100 mA; **PNP:** < 3 V at 100 mA

Sensing Hysteresis

"A" suffix models: 2 mm
"B" suffix models: 3 mm
"C" suffix models: 4 mm

Minimum Window Size

10 mm (0.4 in)

Adjustments

Sensing window limits: TEACH-Mode of near and far window limits may be set using the push button or remotely via TEACH input.
Output Configuration: NPN, PNP, Normally Open (NO), Normally Closed (NC) select (see or).
Advanced configuration options: Push button enabled/disabled, temperature compensation enabled/disabled (see)

Environmental Rating

Leakproof design, ratedIP67

Connections

2 m (6.5 ft) or 9 m (30 ft) shielded 4-conductor (with drain) PVC cable, 150 mm (6 in) PUR cable with an M12 connector (QPMA), or 4-pin integral M12 connector (Q8)

Output Response Time

"A" suffix models: 45 ms
"B" suffix models: 92 ms
"C" suffix models: 135 ms

Output Protection Circuitry

Protected against short circuit conditions

Repeatability

"A" suffix models: 0.1% of distance (0.5 mm min.)
"B" suffix models: 0.1% of distance (1.0 mm min.)
"C" suffix models: 0.1% of distance (1.5 mm min.)

Application Note

The temperature warmup drift upon power-up is less than 1% of the sensing distance.

Temperature Effect

0.02% of distance/°C

Delay at Power-up

500 ms

Operating Conditions

–40 °C to +70 °C (–40 °F to +158 °F)
95% at +50 °C maximum relative humidity (non-condensing)

Required Overcurrent Protection

WARNING: Electrical connections must be made by qualified personnel in accordance with local and national electrical codes and regulations.

Overcurrent protection is required to be provided by end product application per the supplied table.
Overcurrent protection may be provided with external fusing or via Current Limiting, Class 2 Power Supply.
Supply wiring leads < 24 AWG shall not be spliced.
For additional product support, go to www.bannerengineering.com.

Supply Wiring (AWG)	Required Overcurrent Protection (A)	Supply Wiring (AWG)	Required Overcurrent Protection (A)
20	5.0	26	1.0
22	3.0	28	0.8
24	2.0	30	0.5

Certifications

Banner Engineering BV
Park Lane, Culliganlaan 2F bus 3
1831 Diegem, BELGIUM

Turck Banner LTD Blenheim House
Blenheim Court
Wickford, Essex SS11 8YT
GREAT BRITAIN

NOTE: NPN < 200 µA for load impedance > 3 kΩ; for load current of 100 mA, leakage < 1% of load current

Original Instructions
18-Aug-26

© Banner Engineering Corp. All rights reserved.
www.bannerengineering.com

138381
p/n: 138381 Rev. J

ПРОМЭЛЕКТРОНИКА/ sales@prom-elec.com

Dimensions

All measurements are listed in millimeters [inches], unless noted otherwise. The measurements provided are subject to change.

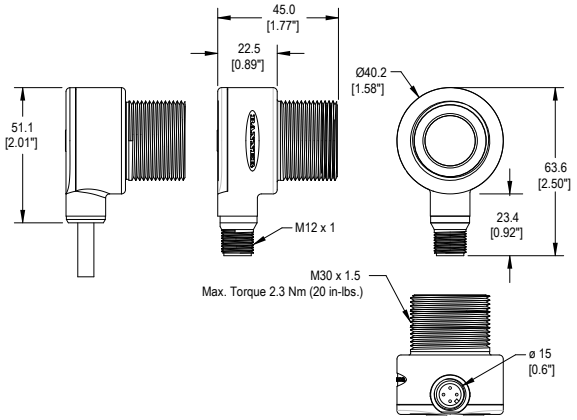

Wiring

Cabled and quick disconnect (QD) connector wiring is functionally identical. Shielded cordsets are recommended for all QD models.

NPN (sinking) output selected

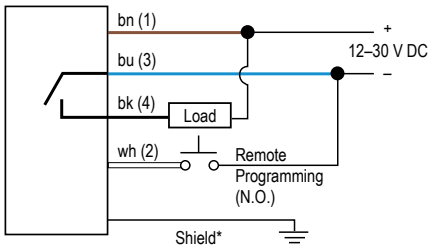

* It is recommended that the shield wire be connected to either earth ground or DC common.

PNP (sourcing) output selected

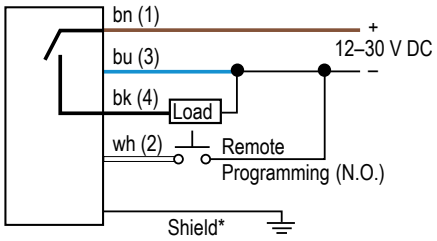

* It is recommended that the shield wire be connected to either earth ground or DC common.

4-pin M12 male quick disconnect connector

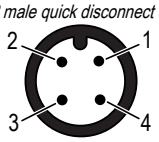

Wiring Key

1 = Brown
2 = White
3 = Blue
4 = Black

Sensor Configuration

For detailed configuration instructions, see the T30UX with Discrete Output Product Manual.

Two TEACH methods may be used to configure the sensor:

- Teach individual minimum and maximum limits, or
- Use Auto-Window feature to center a sensing window around the taught position.

The sensor may be configured either via its push button, or via a remote switch. Remote configuration also may be used to disable the push button, preventing unauthorized personnel from adjusting the configuration settings. To access this feature, connect the white wire of the sensor to 0 V DC, with a remote configuration switch between the sensor and the voltage.

Configuration is accomplished by following the sequence of input pulses. The duration of each pulse (corresponding to a push button "click"), and the period between multiple pulses, are as "T": **0.04 seconds < T < 0.8 seconds**

Remote line configuration requires a greater than 1 second pause between pulse sequences.

Contact Us

Banner Engineering Corp. | 9714 Tenth Avenue North | Plymouth, MN 55441, USA | Phone: + 1 888 373 6767

For worldwide locations and local representatives, visit www.bannerengineering.com.

Banner Engineering Corp Limited Warranty

Banner Engineering Corp. warrants its products to be free from defects in material and workmanship for one year following the date of shipment. Banner Engineering Corp. will repair or replace, free of charge, any product of its manufacture which, at the time it is returned to the factory, is found to have been defective during the warranty period. This warranty does not cover damage or liability for misuse, abuse, or the improper application or installation of the Banner product.

THIS LIMITED WARRANTY IS EXCLUSIVE AND IN LIEU OF ALL OTHER WARRANTIES WHETHER EXPRESS OR IMPLIED (INCLUDING, WITHOUT LIMITATION, ANY WARRANTY OF MERCHANTABILITY OR FITNESS FOR A PARTICULAR PURPOSE), AND WHETHER ARISING UNDER COURSE OF PERFORMANCE, COURSE OF DEALING OR TRADE USAGE.

This Warranty is exclusive and limited to repair or, at the discretion of Banner Engineering Corp., replacement. **IN NO EVENT SHALL BANNER ENGINEERING CORP. BE LIABLE TO BUYER OR ANY OTHER PERSON OR ENTITY FOR ANY EXTRA COSTS, EXPENSES, LOSSES, LOSS OF PROFITS, OR ANY INCIDENTAL, CONSEQUENTIAL OR SPECIAL DAMAGES RESULTING FROM ANY PRODUCT DEFECT OR FROM THE USE OR INABILITY TO USE THE PRODUCT, WHETHER ARISING IN CONTRACT OR WARRANTY, STATUTE, TORT, STRICT LIABILITY, NEGLIGENCE, OR OTHERWISE.**

Banner Engineering Corp. reserves the right to change, modify or improve the design of the product without assuming any obligations or liabilities relating to any product previously manufactured by Banner Engineering Corp. Any misuse, abuse, or improper application or installation of this product or use of the product for personal protection applications when the product is identified as not intended for such purposes will void the product warranty. Any modifications to this product without prior express approval by Banner Engineering Corp will void the product warranties. All specifications published in this document are subject to change; Banner reserves the right to modify product specifications or update documentation at any time. Specifications and product information in English supersede that which is provided in any other language. For the most recent version of any documentation, refer to: www.bannerengineering.com.

For patent information, see www.bannerengineering.com/patents.

© Banner Engineering Corp. All rights reserved. www.bannerengineering.com