R45C PFM to Analog Output Converter Instruction Manual

Features



- Compact analog converter that outputs an analog value, voltage or current, as presented by a received PFM input signal
- Rugged overmolded design meets IP65, IP67, and IP68
- Connects directly to a sensor or anywhere in-line for ease of use

Models

Model Name	Function	Female End	Male End	Connectors
R45C-PF-IQ	Converter	Pulse Frequency Modulation (PFM)	Analog Current Out	Integral 5-pin M12 male and female quick-disconnect connectors
R45C-PF-UQ			Analog Voltage Out	

Overview

The R45C PFM to Analog Output Converter connects to the PFM output of a sensor, and converts the PFM signal into an analog output.

Pulse Frequency Modulation (PFM) is a way to represent an analog measurement value from a sensor digitally, and the R45C-PF-xx translates that digital representation into an analog output signal.

- Voltage range is 0 V to 10 V
- Current range is 4 mA to 20 mA
- PFM signal input range is 100 Hz to 600 Hz

Status Indicators

The R45C PFM to Analog Output Converter has two amber LED indicators on both sides for connected sensor status and provides adequate indication visibility. There is also a green LED indicator on both sides of the converter, which signals the device's power status.

R45C status indicators – front and back

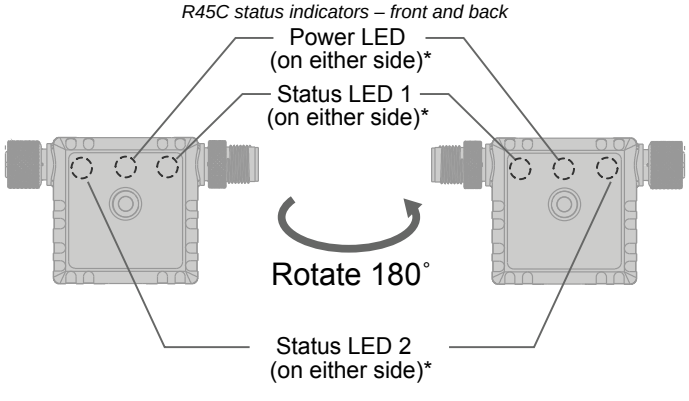

* Indicator LEDs are visible through translucent housing

Status 1 LED - Amber

Indication	Status
Solid On/Off	On: Analog output is within valid range Off: Analog output is outside of valid range, or no sensor is connected

Status 2 LED - Amber

Indication	Status
Solid On/Off	On: PFM is within valid range Off: PFM is outside of valid range, or no sensor is connected

Original Instructions
10-Apr-25

© Banner Engineering Corp. All rights reserved.
www.bannerengineering.com

234819
p/n: 234819 Rev. B

ПРОМЭЛЕКТРОНИКА/ sales@prom-elec.com

Installation

Mechanical Installation

Install the R45C to allow access for functional checks, maintenance, and service or replacement. Do not install the R45C in such a way to allow for intentional defeat.

Fasteners must be of sufficient strength to guard against breakage. The use of permanent fasteners or locking hardware is recommended to prevent the loosening or displacement of the device. The mounting hole (4.5 mm) in the R45C accepts M4 (#8) hardware.

See the figure below to help in determining the minimum screw length.

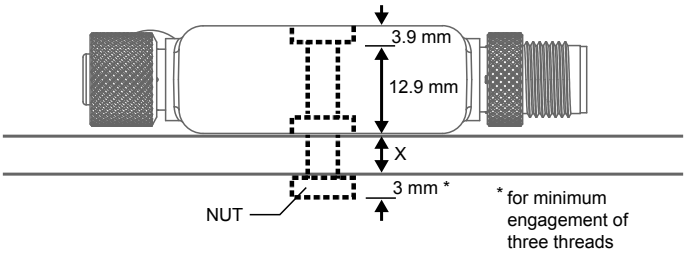

Screw Length (with screw head fitting in counterbore) = 12.9 mm + “X” mm + 3 mm

CAUTION: Do not overtighten the R45C's mounting screw during installation. Overtightening can affect the performance of the R45C.

Wiring

The following wiring diagrams are examples of different R45C outputs.

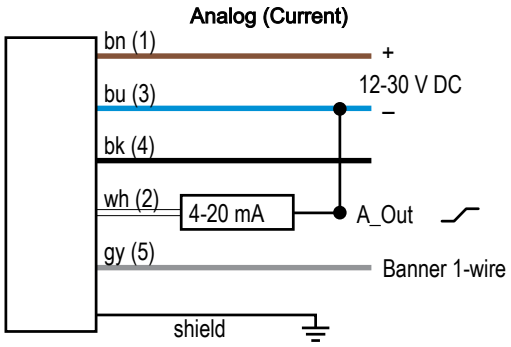

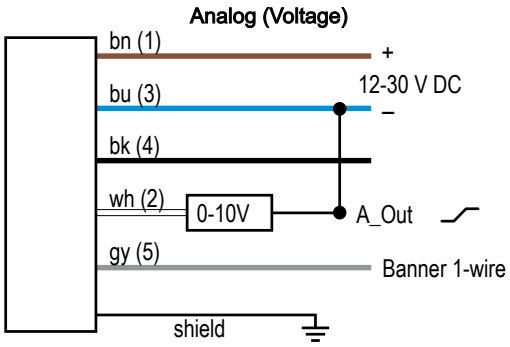

Female	Male	Pin	Wire Color
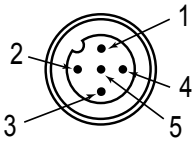	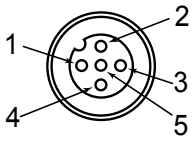	1	Brown
		2	White
		3	Blue
		4	Black
		5	Gray

Pin Number	Signal Description - Female	Signal Description - Male
Pin 1	12 V DC to 30 V DC	12 V DC to 30 V DC
Pin 2	PFM Input Signal	Analog Out
Pin 3	Ground	Ground
Pin 4	Pass-through to Pin 4 (Male)	Pass-through to Pin 4 (Female)
Pin 5	No Connection (N/C)	Banner 1-wire

© Banner Engineering Corp. All rights reserved.
www.bannerengineering.com

Specifications

Supply Voltage
12 V DC to 30 V DC at 50 mA maximum

Supply Protection Circuitry
Protected against reverse polarity and transient voltages

Leakage Current Immunity
400 µA

Resolution
14 bits

Accuracy
0.5%

Indicators
Green: Power LED
Amber: Status 1 LED
Amber: Status 2 LED

Connections
Integral 5-pin M12 male/female quick-disconnect connectors

Construction
Coupling Material: Nickel-plated brass
Connector Body: PVC translucent black

Vibration and Mechanical Shock
Meets IEC 60068-2-6 requirements (Vibration: 10 Hz to 55 Hz, 0.5 mm amplitude, 5 minutes sweep, 30 minutes dwell)
Meets IEC 60068-2-27 requirements (Shock: 15G 11 ms duration, half sine wave)

Environmental Rating
IP65, IP67, IP68
UL Type 1

Operating Conditions
Temperature: –40 °C to +70 °C (–40 °F to +158 °F)
90% at +70 °C maximum relative humidity (non-condensing)
Storage Temperature: –40 °C to +80 °C (–40 °F to +176 °F)

Required Overcurrent Protection

WARNING: Electrical connections must be made by qualified personnel in accordance with local and national electrical codes and regulations.

Overcurrent protection is required to be provided by end product application per the supplied table.

Overcurrent protection may be provided with external fusing or via Current Limiting, Class 2 Power Supply.

Supply wiring leads < 24 AWG shall not be spliced.

For additional product support, go to www.bannerengineering.com.

Supply Wiring (AWG)	Required Overcurrent Protection (A)	Supply Wiring (AWG)	Required Overcurrent Protection (A)
20	5.0	26	1.0
22	3.0	28	0.8
24	1.0	30	0.5

Certifications

Banner Engineering BV
Park Lane, Culliganlaan 2F bus 3
1831 Diegem, BELGIUM

Turck Banner LTD Blenheim House
Blenheim Court
Wickford, Essex SS11 8YT
GREAT BRITAIN

Product Identification

SNAP SIGNAL®

FCC Part 15 Class B for Unintentional Radiators

(Part 15.105(b)) This equipment has been tested and found to comply with the limits for a Class B digital device, pursuant to part 15 of the FCC Rules. These limits are designed to provide reasonable protection against harmful interference in a residential installation. This equipment generates, uses, and can radiate radio frequency energy and, if not installed and used in accordance with the instructions, may cause harmful interference to radio communications. However, there is no guarantee that interference will not occur in a particular installation. If this equipment does cause harmful interference to radio or television reception, which can be determined by turning the equipment off and on, the user is encouraged to try to correct the interference by one or more of the following measures:

- Reorient or relocate the receiving antenna.
- Increase the separation between the equipment and receiver.
- Connect the equipment into an outlet on a circuit different from that to which the receiver is connected.
- Consult the dealer or an experienced radio/TV technician for help.

(Part 15.21) Any changes or modifications not expressly approved by the party responsible for compliance could void the user's authority to operate this equipment.

Industry Canada ICES-003(B)

This device complies with CAN ICES-3 (B)/NMB-3(B). Operation is subject to the following two conditions: 1) This device may not cause harmful interference; and 2) This device must accept any interference received, including interference that may cause undesired operation.

Cet appareil est conforme à la norme NMB-3(B). Le fonctionnement est soumis aux deux conditions suivantes : (1) ce dispositif ne peut pas occasionner d'interférences, et (2) il doit tolérer toute interférence, y compris celles susceptibles de provoquer un fonctionnement non souhaité du dispositif.

© Banner Engineering Corp. All rights reserved.
www.bannerengineering.com

Dimensions

All measurements are listed in millimeters [inches], unless noted otherwise. The measurements provided are subject to change.

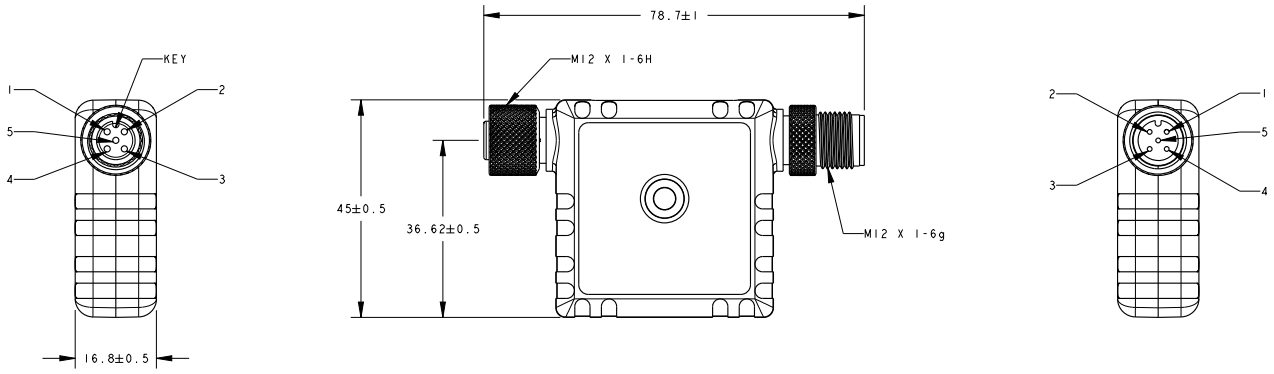

Accessories

Cordsets

Use these cordsets to extend the distance between the R45C-PF-UQ or R45C-PF-IQ and the PLC/Host.

5-Pin Double-Ended M12 Female to M12 Male Shielded Cordset				
Model	**Length "L1"**	**Style**	**Pinout (Male)**	**Pinout (Female)**
MQDEC3-503SS	0.91 m (2.99 ft)	Female Straight/Male Straight	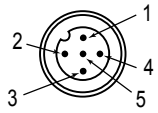	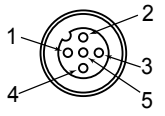
MQDEC3-506SS	1.83 m (6 ft)			
MQDEC3-515SS	4.58 m (15 ft)			
MQDEC3-530SS	9.2 m (30.2 ft)			
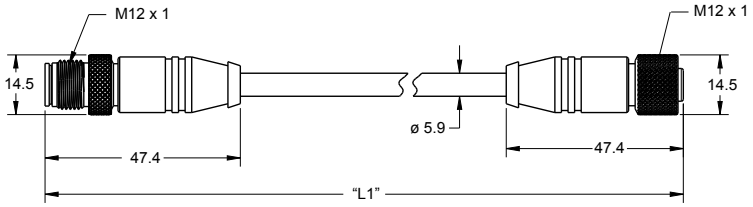			1 = Brown 2 = White 3 = Blue	4 = Black 5 = Gray

Use these cordsets to extend the distance between a sensor with a 4-pin M12 male connector and the R45C-PF-UQ or R45C-PF-IQ.

© Banner Engineering Corp. All rights reserved.
www.bannerengineering.com

4-Pin Double-Ended M12 Female to M12 Male Cordsets				
Model	**Length**	**Style**	**Dimensions**	**Pinout**
MQDEC-401SS	0.31 m (1 ft)	Male Straight/Female Straight	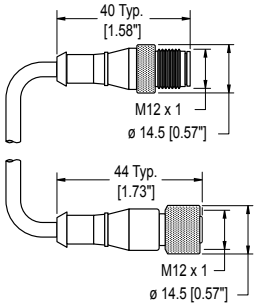	Female 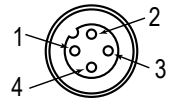 Male 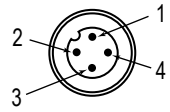 1 = Brown 2 = White 3 = Blue 4 = Black
MQDEC-403SS	0.91 m (2.99 ft)			
MQDEC-406SS	1.83 m (6 ft)			
MQDEC-412SS	3.66 m (12 ft)			
MQDEC-415SS	4.58 m (15 ft)			
MQDEC-420SS	6.10 m (20 ft)			
MQDEC-430SS	9.14 m (30.2 ft)			
MQDEC-450SS	15.2 m (49.9 ft)			

Use these cordsets or adapter to connect between a sensor with a 4-pin M8 male connector and the R45C-PF-UQ or R45C-PF-IQ.

4-pin M12 Male A-Code to 4-pin M8 Female Connector				
Model	**Length**	**M12 Male A-Code**	**M8 Female**	**Pinout Key**
BC-M12M4-M8F4-26-0.16M	0.16 m (0.50 ft)	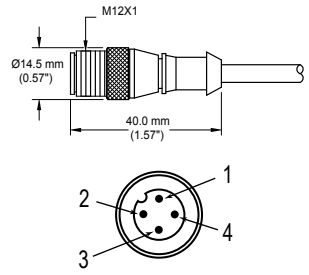	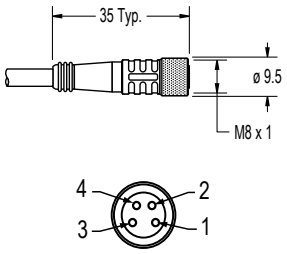	1 = Brown 2 = White 3 = Blue 4 = Black
BC-M12M4-M8F4-26-2.5M	2.5 m (8.2 ft)			

4-pin M12 Male to 4-pin M8 Female Adapter			
Model	**Style**	**Dimensions**	**Pinout**
S15A-M12M4M8F4	In-Line Adapter	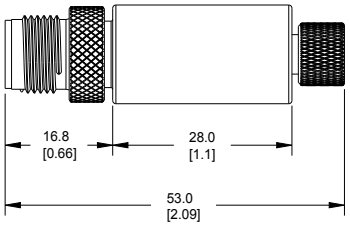	Female 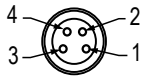 Male 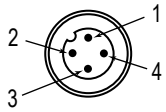 1 = Brown 2 = White 3 = Blue 4 = Black

Product Support and Maintenance

Clean with Mild Detergent and Water

Wipe down the device with a soft cloth that has been dampened with a mild detergent and warm water solution.

Repairs

Contact Banner Engineering for troubleshooting of this device. **Do not attempt any repairs to this Banner device; it contains no field-replaceable parts or components.** If the device, device part, or device component is determined to be defective by a Banner Applications Engineer, they will advise you of Banner's RMA (Return Merchandise Authorization) procedure.

© Banner Engineering Corp. All rights reserved.
www.bannerengineering.com

IMPORTANT: If instructed to return the device, pack it with care. Damage that occurs in return shipping is not covered by warranty.

Contact Us

Banner Engineering Corp. headquarters is located at: 9714 Tenth Avenue North | Plymouth, MN 55441, USA | Phone: + 1 888 373 6767

For worldwide locations and local representatives, visit www.bannerengineering.com.

Banner Engineering Corp Limited Warranty

Banner Engineering Corp. warrants its products to be free from defects in material and workmanship for one year following the date of shipment. Banner Engineering Corp. will repair or replace, free of charge, any product of its manufacture which, at the time it is returned to the factory, is found to have been defective during the warranty period. This warranty does not cover damage or liability for misuse, abuse, or the improper application or installation of the Banner product.

THIS LIMITED WARRANTY IS EXCLUSIVE AND IN LIEU OF ALL OTHER WARRANTIES WHETHER EXPRESS OR IMPLIED (INCLUDING, WITHOUT LIMITATION, ANY WARRANTY OF MERCHANTABILITY OR FITNESS FOR A PARTICULAR PURPOSE), AND WHETHER ARISING UNDER COURSE OF PERFORMANCE, COURSE OF DEALING OR TRADE USAGE.

This Warranty is exclusive and limited to repair or, at the discretion of Banner Engineering Corp., replacement. **IN NO EVENT SHALL BANNER ENGINEERING CORP. BE LIABLE TO BUYER OR ANY OTHER PERSON OR ENTITY FOR ANY EXTRA COSTS, EXPENSES, LOSSES, LOSS OF PROFITS, OR ANY INCIDENTAL, CONSEQUENTIAL OR SPECIAL DAMAGES RESULTING FROM ANY PRODUCT DEFECT OR FROM THE USE OR INABILITY TO USE THE PRODUCT, WHETHER ARISING IN CONTRACT OR WARRANTY, STATUTE, TORT, STRICT LIABILITY, NEGLIGENCE, OR OTHERWISE.**

Banner Engineering Corp. reserves the right to change, modify or improve the design of the product without assuming any obligations or liabilities relating to any product previously manufactured by Banner Engineering Corp. Any misuse, abuse, or improper application or installation of this product or use of the product for personal protection applications when the product is identified as not intended for such purposes will void the product warranty. Any modifications to this product without prior express approval by Banner Engineering Corp will void the product warranties. All specifications published in this document are subject to change; Banner reserves the right to modify product specifications or update documentation at any time. Specifications and product information in English supersede that which is provided in any other language. For the most recent version of any documentation, refer to: www.bannerengineering.com.

For patent information, see www.bannerengineering.com/patents.

© Banner Engineering Corp. All rights reserved.
www.bannerengineering.com