TABLE OF LENGTHS			
P/N	MODEL NO.	"L1"(m[ft])	"L2"(m[ft])
20578	CSS-MI2F4IMI2M4IMI2F4I	0.30[0.98]	0.30[0.98]
25470	CSS-MI2F43MI2M4IMI2F4I	0.9I[2.99]	0.30[0.98]
2547I	CSS-MI2F48MI2M4IMI2F4I	2.50[8.20]	0.30[0.98]

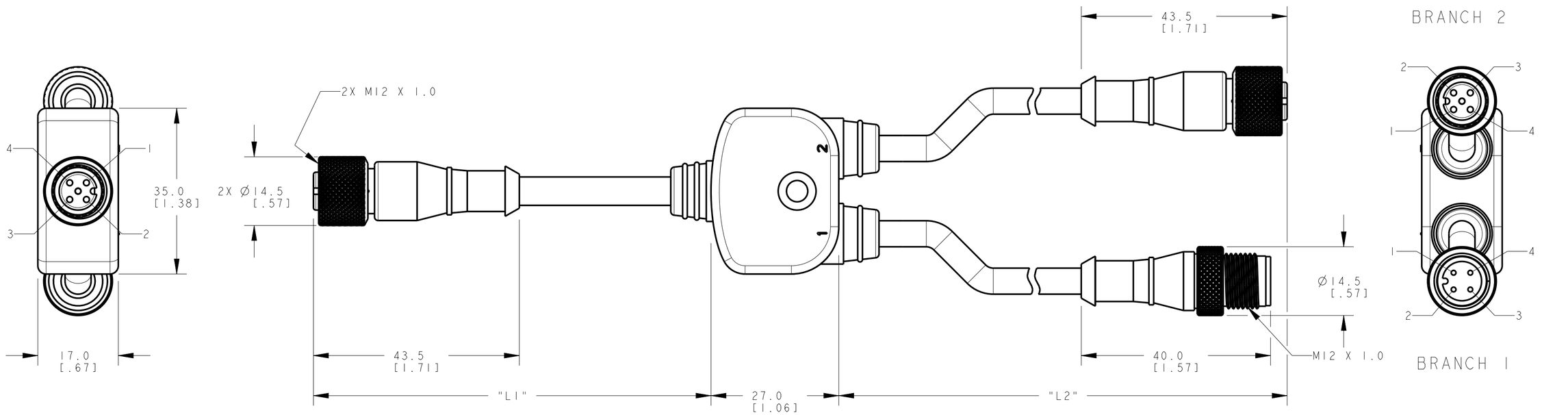

WIRING DIAGRAM

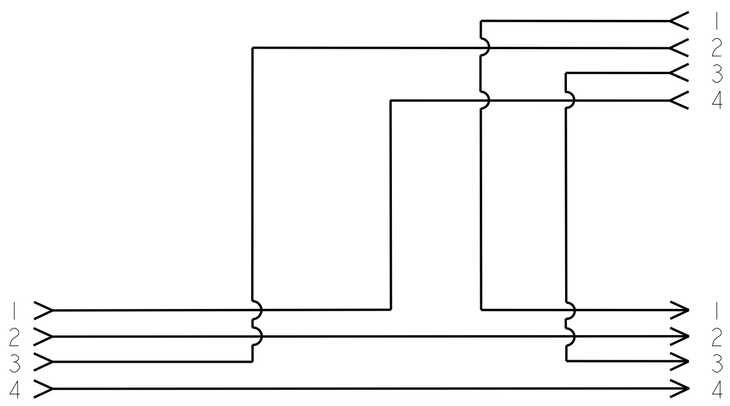

NOTES:
1. ALL DIMENSIONS ARE MILLIMETERS [INCHES] UNLESS OTHERWISE NOTED.
2. REFER TO "www.bannerengineering.com" FOR ADDITIONAL DATA AND SPECIFICATIONS.

This drawing is the property of BANNER ENGINEERING CORP. Any use or reproduction, in any form, without prior written permission of Banner is prohibited.
© 2015 Banner Engineering Corp.

THIRD ANGLE PROJECTION

BANNER ENGINEERING CORP.
www.bannerengineering.com

TITLE
CSS-MI2F4xMI2M4IMI2F4I

SIZE	DRAWING NO.	REV.
C	215133	A

SCALE	SHEET
3:2	I OF I

CREO

ПРОМЭЛЕКТРОНИКА/ sales@prom-elec.com