MODEL NO.	"L"	P/N
PFS53S10T	3048 [120]	93126
PFS53S14T	4267 [168]	56357
PFS53S15T	4572 [180]	56317
PFS53S3T	914 [36]	69680
PFS53S6T	1829 [72]	48028

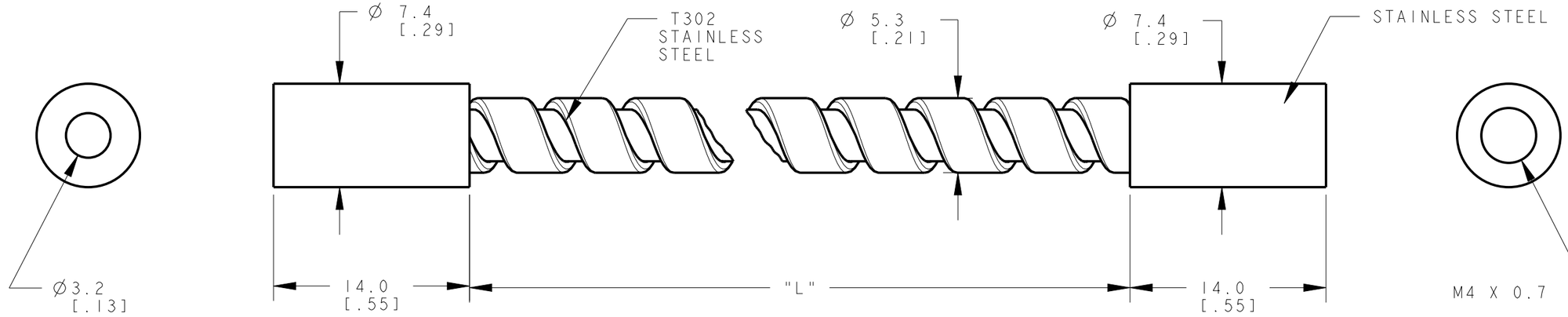

NOTES:
1. ALL DIMENSIONS ARE MILLIMETERS [INCHES] UNLESS OTHERWISE NOTED.
2. REFER TO "www.bannerengineering.com" FOR ADDITIONAL DATA AND SPECIFICATIONS.

This drawing is the property of BANNER ENGINEERING CORP. Any use or reproduction, in any form, without prior written permission of Banner is prohibited.
© 2015 Banner Engineering Corp.

THIRD ANGLE PROJECTION

BANNER ENGINEERING CORP.
www.bannerengineering.com

TITLE

SHEATH PFS53S6T FIELD-INSTALL

SIZE	DRAWING NO.	REV.
B	188731	A
SCALE 3:1	SHEET 1 OF 1	

CREO

ПРОМЭЛЕКТРОНИКА/ sales@prom-elec.com