

EZ-ARRAY System with Modbus Product Manual

Original Instructions
p/n: 130426 Rev H
08-Apr-26
© Banner Engineering Corp. All rights reserved. www.bannerengineering.com

ПРОМЭЛЕКТРОНИКА/ sales@prom-elec.com

Contents

Chapter 1 EZ-ARRAY Features 4

Overview 5
System Components 6
Models 6
Status Indicators 8
Receiver User Interface 10
Specifications 12
Standard Bracket Dimensions 13
Emitter and Receiver Dimensions 14

Chapter 2 Installation Instructions 16

Mounting the Emitter and Receiver 16
Mechanical Alignment 17
EZAR Wiring Diagrams 18
Communication Interface 18
Inputs 19
Outputs 19
Optical Alignment 20

Chapter 3 Configuration Instructions 22

Configuration via DIP Switch or Configuration Software 22
Receiver Gray (Remote Teach) Wire 22
Gain Configuration 23
Blanking 24
Measurement Mode Selection 24
"Beam Location" Modes 24
"Beam Total" Modes 25
Outputs 27
Analog Output Configuration 27
Discrete Output Configuration 27
Scanning Method 28
Straight Scan 28
Single-Edge Scan 28
Double-Edge Scan 28
Maximum Scan Times in SIO Mode 29

Chapter 4 Using the Banner Sensor GUI Software 31

Supplied Software 31
Communications Connections 32
Accessing the Software 32
Sensor Menu (Alignment/Status Screen) 32
Options Menu 33
Help Menu 34
Factory Defaults 34
Alignment and Blanking 34
Align the Sensor Electronically 35
Configuration Setup 36
Setup Screen 36
Status and Message Windows 37
System Config View 37
Scan Configuration 38
Gain Configuration 38
Analog Output Config View 39
Discrete Output Config View 40
Comm Config View 40
Part Number and Version Info View 41
System Diagnostics View 41
Communications Troubleshooting 41
Menu Structure 42

Chapter 5 Accessories 46

Cordsets and Connections 46
Alignment Aids 48
Accessory Mounting Brackets and Stands 48
MSA Series Stands 48

© Banner Engineering Corp. All rights reserved. www.bannerengineering.com

Chapter 6 Additional Information 49

Modbus Overview 49
Read Holding Registers (0x03) 49
Read Input Register (0x04) 50
Write Multiple Holding Registers (0x10) 51
Configuration Data 52
Scan Configuration 52
Blanking Configuration 53
General Configuration 54
Modbus Communications Configuration 56
Analog Output 1 Configuration 57
Analog Output 2 Configuration 58
Discrete Output 1 Configuration 58
Discrete Output 2 Configuration 59
System Status and Measurement Data 59
Active Measurements 59
ALL Measurements 60
Channel States 62
System Info and Status 63
Receiver and Emitter Version Info 65
Communications Version Info 66

Chapter 7 Product Support and Maintenance 67

Troubleshooting 67
Error Codes 67
"Dirty" Channel Indicator 67
Replacement Parts 68
Contact Us 68
Banner Engineering Corp Limited Warranty 68

© Banner Engineering Corp. All rights reserved. www.bannerengineering.com

Chapter Contents

Overview 5
Specifications 12

Chapter 1 EZ-ARRAY Features



- A cost-effective, two-piece measuring light curtain designed for quick and simple installations with the sophistication to handle the toughest sensing applications
- Excels at high-speed, precise process monitoring and inspection, profiling, and web-guiding applications
- A comprehensive combination of scanning options:
  - 14 measurement (scan analysis) modes
  - Three scanning methods
  - Selectable beam blanking
  - Selectable continuous or gated scan initiation
  - Selectable threshold setting for semi-transparent applications
  - Two analog outputs, two discrete outputs
  - Communication via configuration software
- Outstanding 4-meter range with 5 mm beam spacing
- Available in 12 lengths from 150 mm to 2400 mm
- Excellent 5 mm minimum object detection or 2.5 mm edge resolution, depending on the scanning method
- Receiver user interface for quick, intuitive setup of many common applications:
  - Six-position DIP switch for setting scan mode, measurement mode, analog slope, discrete output 2 option (complementary measurement or alarm operation)
  - Two push buttons for gain method selection and alignment/ blanking
  - Seven Zone LEDs for instant alignment and beam blockage information
  - Three-digit display for sensing information and diagnostics
- Configuration software available for advanced configuration options
- Remote teach wire option for alignment, gain settings, inverted display, and DIP switch disable

WARNING:

- **Do not use this device for personnel protection**
- Using this device for personnel protection could result in serious injury or death.
- This device does not include the self-checking redundant circuitry necessary to allow its use in personnel safety applications. A device failure or malfunction can cause either an energized (on) or de-energized (off) output condition.

© Banner Engineering Corp. All rights reserved.
www.bannerengineering.com

Overview

The A-GAGE® EZ-ARRAY™ measuring light screen is ideal for such applications as on-the-fly product sizing and profiling, edge-guiding and center-guiding, loop tensioning control, hole detection, parts counting, and similar uses.

Emitters and receivers are available with arrays from 150 to 2400 mm (5.9 in to 94.5 in) long. The emitter has a column of infrared light emitting diodes (LEDs) spaced 5 mm apart; their light is collimated and directed toward the receiver, positioned opposite the emitter, which has photodiodes on the same 5 mm pitch. The light from each emitter LED is detected by the corresponding receiver photodiode.

Application

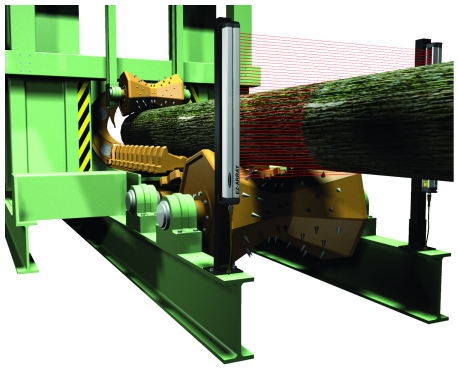

This sophisticated light curtain is capable of detecting opaque cylindrical objects as small as 5mm in diameter or measuring part edges within 2.5 mm, depending on the scanning method selected ("Scanning Method" on page 28). The sensing range is 400 mm to 4 m (16 in to 13 ft) on standard models and 30 mm to 1500 mm (1.18 in to 59 in) on the short-range, low-contrast models.(1)

Short range, low contrast models are available for applications requiring a shorter distance between emitter and receiver or where detection and profiling of non-opaque targets is needed. Detection of glass or other clear objects is possible with this system.

The EZ-ARRAY's two-piece design makes it economical and easy to use. Controller functionality is built into the receiver housing. It can be configured for many straightforward applications using the six-position DIP switch on the front of the receiver (the receiver user interface). For more advanced control, easy-to-use configuration software is available to configure the sensors using a PC.

The emitter and receiver housings can be side-mounted or end-cap-mounted using the included end-cap brackets; longer models also include a center bracket. (See "Mounting the Emitter and Receiver" on page 16.)

Beam synchronization is achieved via the 8-conductor sensor cables. Individual LEDs and a 3-digit diagnostic display on the receiver provide ongoing visual sensing status and diagnostic information. Comprehensive data is available to a process controller via a combination of five outputs: two analog, two discrete, and one Modbus 485-RTU communication interface. (See "Receiver User Interface" on page 10.)

Emitter and Receiver

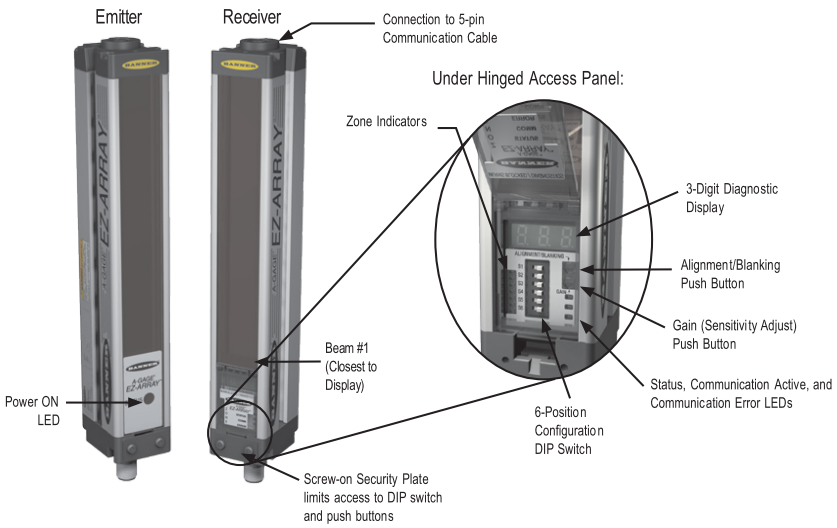

Built-in features in the EZ-ARRAY contribute to its ease of use. Many features are available using either the user-friendly receiver interface or the more advanced configuration software.

(1) Contact the factory for short-range, low-contrast models.

© Banner Engineering Corp. All rights reserved.
www.bannerengineering.com

Diagnostic programming and easy-to-see indicators on the receiver simplify physical alignment and troubleshooting; more advanced diagnostics are available via the configuration software.

The alignment/blanking button ("Alignment/Blanking Button (Electronic Alignment)" on page 12) automatically equalizes the excess gain of each beam for reliable object detection throughout the array. This routine need not be performed again unless the sensing application changes, or if the emitter and/or receiver is moved.

Configurable beam blanking accommodates machine components and fixtures that must remain in or move through the light screen. Blanking may be set using the receiver interface, the teach wire, or the configuration software.

The EZ-ARRAY light screen provides a wide selection of sensing and output options, including measurement (“scan analysis”) modes and scanning methods that can determine a target object’s location, overall size, total height, or total width, or the number of objects. Scanning may be continuous or controlled by a gate sensor. Up to 15 systems may be networked via Modbus 485 RTU.

System Components

A typical A-GAGE EZ-ARRAY has four components: an emitter and a receiver, each with an integral quick-disconnect (QD) fitting, plus an 8-pin QD cordset for the emitter and for the receiver.

For applications that use the Modbus RTU-485 interface, an additional 5-wire cable is used to connect the receiver with a PC or process controller, via the Modbus 485-RTU connection. (A PC used with software version 2.0 for configuration must run on Windows® XP, Vista™, or WIN7™.)

Components



Models

The **standard models** can solve the majority of measuring array applications. These models have a range of 400 mm to 4 m and are capable of measuring a wide variety of objects. For low-contrast applications, these models can detect changes in contrast down to 15%. These models are ideal for web guiding, carton dimensioning, or other sizing applications.

Standard models

Emitter Model	Receiver Model	Receiver Discrete Output	Receiver Analog Output	Length Y[2]	Total Beams
EA5E150Q	EA5R150NIXMODQ	NPN	Current (4-20 mA)	150 mm (5.9 in)	30
	EA5R150PIXMODQ	PNP	Current (4-20 mA)		
	EA5R150PUXMODQ		Voltage (0-10 V)		
EA5E300Q	EA5R300NIXMODQ	NPN	Current (4-20 mA)	300 mm (11.8 in)	60
	EA5R300NUXMODQ		Voltage (0-10 V)		
	EA5R300PIXMODQ	PNP	Current (4-20 mA)		
	EA5R300PUXMODQ		Voltage (0-10 V)		
EA5E450Q	EA5R450NIXMODQ	NPN	Current (4-20 mA)	450 mm (17.7 in)	90
	EA5R450NUXMODQ		Voltage (0-10 V)		
	EA5R450PIXMODQ	PNP	Current (4-20 mA)		

Continued on page 7

[2] Models with array lengths 1050 mm and longer ship with a center bracket as well as two end-cap brackets.

© Banner Engineering Corp. All rights reserved.
www.bannerengineering.com

Continued from page 6

Emitter Model	Receiver Model	Receiver Discrete Output	Receiver Analog Output	Length Y	Total Beams
	EA5R450PUXMODQ		Voltage (0-10 V)		
EA5E600Q	EA5R600NIXMODQ	NPN	Current (4-20 mA)	600 mm (23.6 in)	120
	EA5R600NUXMODQ		Voltage (0-10 V)		
	EA5R600PIXMODQ	PNP	Current (4-20 mA)		
	EA5R600PUXMODQ		Voltage (0-10 V)		
EA5E750Q	EA5R750NIXMODQ	NPN	Current (4-20 mA)	750 mm (29.5 in)	150
	EA5R750PIXMODQ	PNP	Current (4-20 mA)		
	EA5R750PUXMODQ		Voltage (0-10 V)		
EA5E900Q	EA5R900NIXMODQ	NPN	Current (4-20 mA)	900 mm (35.4 in)	180
	EA5R900NUXMODQ		Voltage (0-10 V)		
	EA5R900PIXMODQ	PNP	Current (4-20 mA)		
	EA5R900PUXMODQ		Voltage (0-10 V)		
EA5E1050Q	EA5R1050NIXMODQ	NPN	Current (4-20 mA)	1050 mm (41.3 in)	210
	EA5R1050NUXMODQ		Voltage (0-10 V)		
	EA5R1050PIXMODQ	PNP	Current (4-20 mA)		
	EA5R1050PUXMODQ		Voltage (0-10 V)		
EA5E1200Q	EA5R1200NIXMODQ	NPN	Current (4-20 mA)	1200 mm (47.2 in)	240
	EA5R1200NUXMODQ		Voltage (0-10 V)		
	EA5R1200PIXMODQ	PNP	Current (4-20 mA)		
	EA5R1200PUXMODQ		Voltage (0-10 V)		
EA5E1500Q	EA5R1500NIXMODQ	NPN	Current (4-20 mA)	1500 mm (59.1 in)	300
	EA5R1500NUXMODQ		Voltage (0-10 V)		
	EA5R1500PIXMODQ	PNP	Current (4-20 mA)		
	EA5R1500PUXMODQ		Voltage (0-10 V)		
EA5E1800Q	EA5R1800NUXMODQ	NPN	Voltage (0-10 V)	1800 mm (70.9 in)	360
	EA5R1800PIXMODQ	PNP	Current (4-20 mA)		
	EA5R1800PUXMODQ		Voltage (0-10 V)		
EA5E2100Q	EA5R2100NIXMODQ	NPN	Current (4-20 mA)	2100 mm (82.7 in)	420
	EA5R2100NUXMODQ		Voltage (0-10 V)		
	EA5R2100PIXMODQ	PNP	Current (4-20 mA)		
	EA5R2100PUXMODQ		Voltage (0-10 V)		
EA5E2400Q	EA5R2400NUXMODQ	NPN	Voltage (0-10 V)	2400 mm (94.5 in)	480
	EA5R2400PIXMODQ	PNP	Current (4-20 mA)		
	EA5R2400PUXMODQ		Voltage (0-10 V)		

The **short-range low-contrast (SRLC) models** offer superior ability to detect and measure clear objects. These models have a range of 30 mm to 1.5 m and are capable of detecting contrast changes as small as 3%. These models are ideal for profiling clear glass plates, monitoring the flow of transparent bottles on a conveyor, or other clear object applications. The receivers for these models have a PNP discrete output.

Short-range low-contrast models

Emitter Model	Receiver Model	Receiver Analog Output	Length Y (mm)	Total Beams
EA5E150Q	EA5R150PIXMODSRLCQ	Current (4-20mA)	150	30
EA5E300Q	EA5R300PIXMODSRLCQ	Current (4-20mA)	300	60
EA5E450Q	EA5R450PUXMODSRLCQ	Voltage (0-10V)	450	90
	EA5R450PIXMODSRLCQ	Current (4-20mA)		

Continued on page 8

© Banner Engineering Corp. All rights reserved.
www.bannerengineering.com

Continued from page 7

Emitter Model	Receiver Model	Receiver Analog Output	Length Y (mm)	Total Beams
EA5E600Q	EA5R600PUXMODSRLCQ	Voltage (0-10V)	600	120
	EA5R600PIXMODSRLCQ	Current (4-20mA)		
EA5E750Q	EA5R750PIXMODSRLCQ	Current (4-20mA)	750	150
EA5E900Q	EA5R900PIXMODSRLCQ	Current (4-20mA)	900	180
EA5E1050Q	EA5R1050PIXMODSRLCQ	Current (4-20mA)	1050	210
EA5E1200Q	EA5R1200PIXMODSRLCQ	Current (4-20mA)	1200	240
EA5E1500Q	EA5R1500PUXMODSRLCQ	Voltage (0-10V)	1500	300
	EA5R1500PIXMODSRLCQ	Current (4-20mA)		
EA5E1800Q	EA5R1800PIXMODSRLCQ	Current (4-20mA)	1800	360
EA5E2100Q	EA5R2100PIXMODSRLCQ	Current (4-20mA)	2100	420
EA5E2400Q	EA5R2400PIXMODSRLCQ	Current (4-20mA)	2400	480

To select your components:

1. Select the desired array length.
2. Select the emitter model for that array length.
3. Select the corresponding receiver model with the discrete and analog outputs needed for your application.

The following models are no longer available for order but are still covered by the information in this document.

Inactive standard models

Model	Receiver Discrete Output	Receiver Analog Output	Length Y (mm)	Total Beams
EA5R150NUXMODQ	NPN	Voltage (0-10 V)	150	30
EA5R750NUXMODQ	NPN	Voltage (0-10 V)	750	150
EA5R1800NIXMODQ	NPN	Current (4-20 mA)	1800	360
EA5R2400NIXMODQ	NPN	Current (4-20 mA)	2400	480

Inactive short-range low-contrast models

Model	Receiver Analog Output	Length Y (mm)	Total Beams
EA5R150PUXMODSRLCQ	Voltage (0-10 V)	150	30
EA5R300PUXMODSRLCQ	Voltage (0-10 V)	300	60
EA5R1200PUXMODSRLCQ	Voltage (0-10V)	1200	240

Status Indicators

Both the emitter and receiver provide ongoing visual indication of operating and configuration status.

The emitter has a red LED that signals proper operation (ON when power is applied).

Emitter status indicators

LED	Color	Description
Status LED	Red ON	Status OK
	Red Flashing at 1 Hz	Error

The receiver has a bright Status LED that indicates overall sensing status (OK, marginal alignment, and hardware error). Two other LEDs indicate whether communication is active or if there is an error. Seven Zone indicators each communicate the blocked/aligned status of one-seventh of the total array. A 3-digit diagnostic display provides further diagnostic information: number of beams blocked, whether blanking is configured, and error codes. (See "Error Codes" on page 67 for a listing of error codes.)

© Banner Engineering Corp. All rights reserved.
www.bannerengineering.com

Receiver status indicators

LED	Color	Description
7 Zone Indicators	Red	Blocked channels within the zone
	Green	All channels are clear within the zone
3-digit 7-segment Measurement Mode/Diagnostic Indicator Status LED	Red	Hardware Error or marginal alignment
	Green	Status OK
Modbus Activity Indicator LED	Amber	Modbus activity
Modbus Error Indicator LED	Red On	Error

Zone Indicators (Beams Blocked Segment)

Seven LEDs represent emitter/receiver alignment status. They provide a visual aid for sensor alignment and monitoring objects within the sensor's field of view. The sensor array is partitioned into seven equal segments, each of which is represented by one of the seven LEDs. The LED closest to DIP switch S6 (see "Configuration via DIP Switch or Configuration Software" on page 22) represents the group of optical channels closest to the receiver display (the "bottom" group). The LED closest to DIP switch 1 represents the far segment of channels.

These LEDs illuminate either green or red. When an LED is green, no unblanked beams are obstructed in that segment. When the LED is red, one or more beams in that segment is obstructed.

Three-Digit Display

The 3-digit display has slightly different functions during normal operation, alignment, and gain adjust modes. In normal operation the display indicates the current numerical value of measurement mode 1. The display also identifies the following activated sensor functions: blanking and locked-out user interface/electronic configuration, as shown in "Electronic Configuration Indicator" on page 10.

For directions for inverting the display, see "Receiver Gray (Remote Teach) Wire" on page 22.

During blanking mode, the display reads "**n**", followed by the number of blocked beams in the array. During alignment mode, it reads "**A**", followed by the number of blocked, unblanked beams; a period follows the A ("**A.**") if blanking is configured.

During gain adjust mode, the display reads "**L**" followed by "**1**" or "**2**" to indicate the gain level. (A "**1**" represents high excess gain, and a "**2**" represents low contrast.)

If a sensing error occurs, the display reads "**c**" followed by a number that corresponds to the recommended corrective action.

See "Error Codes" on page 67 for more information.

Blanking Indicator

The Blanking indicator will be visible (ON) when the blanking feature is enabled. It appears as a period following the first digit of the display.

© Banner Engineering Corp. All rights reserved.
www.bannerengineering.com

Electronic Configuration Indicator

Electronic configuration indicator

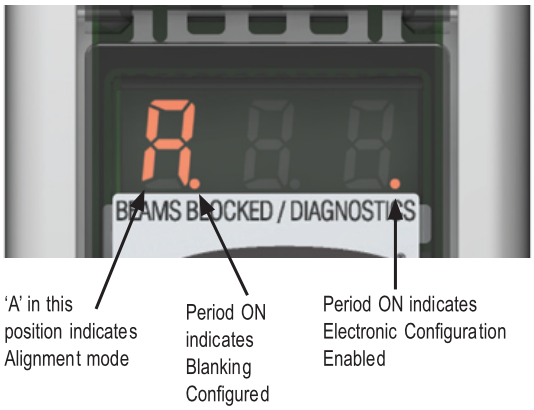

The Electronic Configuration indicator is on when the sensor configuration is defined by the configuration software and not the DIP switch. When electronic configuration is enabled, the DIP switch is ignored.

Receiver User Interface

The receiver user interface comprises the six-position DIP switch, two push buttons, 3-digit display, and other indicators present on the receiver (see Status Indicators for more complete status indicator information). The receiver interface enables configuration of standardized combinations of the EZ-ARRAY sensing options (output configuration, scanning methods and modes).

Configuration DIP Switches

Use the DIP switches to configure the sensor.

Access the switch by removing the screw-on security plate and lifting the clear hinged access cover. The access cover may be removed entirely (pull straight out to remove, press back in to replace) for easier access during configuration.

Some of the switches are assigned their own functions, others work together in combination.

- Switches S1 and S2 in combination select one of four scanning modes.
- Switches S3 and S4 in combination select one of four measurement mode pairs (one for each analog output).
- Switch S5 defines the analog slope setting for both analog outputs and S6 defines whether discrete output 2 is complementary to discrete 1 or functions as an alarm (when configuration is accomplished via DIP switch, discrete output 1 conducts when analog output 1 senses the target).

All DIP switches are shown in the on (default) position

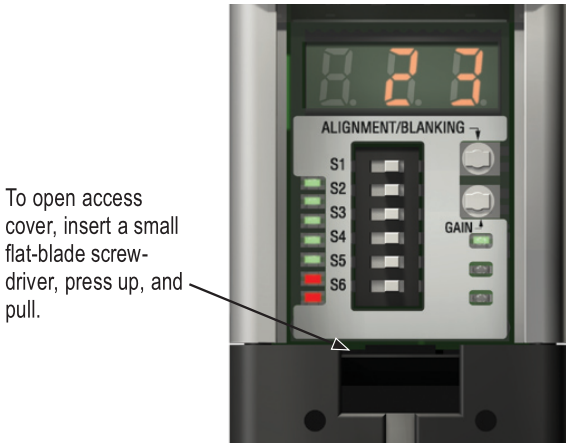

© Banner Engineering Corp. All rights reserved.
www.bannerengineering.com

Receiver DIP switches

Description	Receiver User Interface DIP Switches					
	S1	S2	S3	S4	S5	S6
Scan Mode: Straight Scan (default setting)	ON	ON				
Scan Mode: Double-Edge, Step 1	ON	OFF				
Scan Mode: Double-Edge, Step 4	OFF	ON				
Scan Mode: Single-Edge	OFF	OFF				
Analog 1 TBB; Analog 2 FBB (default setting)			ON	ON		
Analog 1 LBB; Analog 2 MBB			ON	OFF		
Analog 1 OD; Analog 2 ID			OFF	ON		
Analog 1 CBB; Analog 2 CFBB			OFF	OFF		
Positive Analog Slope (default setting)					ON	
Negative Analog Slope					OFF	
Discrete 2 Complementary (default setting)						ON
Discrete 2 Alarm						OFF

Scanning Modes (S1 and S2)

See "Maximum Scan Times in SIO Mode" on page 29 for scan times.

Double-Edge Step 1 (S1 ON, S2 OFF)

Double-Edge Step 1 can be used when three or fewer opaque objects are presented to the light curtain at one time. The advantage of this mode is improved sensor edge resolution (2.5 mm). The minimum object detection size is 10 mm.

Double-Edge Step 4 (S1 OFF, S2 ON)

Double-Edge Step 4 can be used when three or fewer opaque objects are presented to the light curtain and the minimum size object to be detected is 30 mm. This scanning mode ignores objects smaller than 30 mm. Like Double-Edge Step 1, the sensor edge resolution is 2.5 mm.

Single-Edge Scan (S1 OFF, S2 OFF)

Single-Edge Scan can be used when a single opaque object is presented to the light curtain at one time. The object must block the "bottom" channel (the channel closest to the receiver display). Like the double-edge scans, the sensor edge resolution is 2.5 mm. The minimum object detection size is 10 mm. Because single-edge scan is capable only of measuring the height of an opaque object that blocks the bottom channel and all channels up to the height of the object, the pertinent measurement modes are LBB (last beam blocked) or TBB (total beams blocked). When single-edge scan is selected, the selected measurement mode will be applied to both analog outputs. Selection of OD/ID with single-edge scan will result in an error code.

Straight Scan (S1 ON, S2 ON)

Straight Scan is the most versatile scanning mode and can be used without the exceptions noted in the other scanning modes. Use this scanning mode when using the low-contrast sensitivity setting to measure semi-transparent materials.

Measurement Modes (S3 and S4)

The measurement modes, determined by switches S3 and S4 in combination, define what information is calculated by the sensor and sent via the analog outputs. See Measurement Mode Selection for measurement mode definitions. Discrete output 1 will conduct when analog output 1 detects the target. (If single-edge scan is selected, select measurement mode LBB or TBB.)

During normal operation, the 3-digit diagnostic display reads out the numerical value of the specified measuring mode for analog output 1.

Analog Slope (S5)

Switch S5 defines the analog output slope. As the measurement mode values increase, the analog output voltage can either increase (positive slope, S5 ON) or decrease (negative slope, S5 OFF). Switch S5 applies the same slope to both analog outputs.

Complementary/Alarm (S6)

Switch S6 defines the operation of discrete output 2. When the receiver user interface is used, discrete output 1 is active when an object is detected by the sensor (normally open operation).

© Banner Engineering Corp. All rights reserved.
www.bannerengineering.com

In complementary mode (S6 ON), output 2 will always be in the opposite state of output 1.

In alarm mode (S6 OFF), discrete output 2 will be active when the sensor detects a system fault. System faults include a failed emitter, mis-wiring of the emitter/receiver communication wire (the pink wire), and low excess gain (if the sensor is configured for high-contrast sensitivity).

Alignment/Blanking Button (Electronic Alignment)

The Alignment/Blanking push button is used both to maximize the alignment and to access the blanking feature. The electronic alignment routine adjusts the emitted light level to maximize sensor performance. Perform the procedure at installation and again when the emitter and/or receiver is moved. For configuration software alignment instructions, see Alignment and Blanking.

Blanking is used to maintain sensing accuracy in applications where a fixed object (for instance a permanently mounted bracket) will block one or more beams. The sensor will ignore the blanked channels when calculating outputs from the selected measurement modes.

Electronic Alignment and Blanking - Receiver Interface

To initiate the electronic alignment procedure, use a small screwdriver to press the Alignment/Blanking button for two or more seconds. The left-hand digit of the 3-digit display will read "**A**" (representing alignment); the right two digits will show the number of beams blocked. The receiver is learning the clear condition. Rotate the sensors as required (but do not change the distance between them). When the receiver's 3-digit display shows 0 beams blocked, the sensors are adequately aligned.

Tighten the sensor mounts, then press the Alignment/Blanking button again for two seconds to exit alignment mode. If all sensor light channels are clear, the EZ-ARRAY stores each channel's signal strength in non-volatile memory and reads "**- - -**" on the 3-digit display. Re-alignment is not required again, unless the emitter or receiver is moved.

If any beams are blocked by objects other than the sensing target to be measured during run mode, those beams can be blanked in alignment mode for more accurate measurement. The blocked beams must be either blanked or cleared during alignment mode for alignment to proceed (see below). While the "**A**" is visible on the receiver display, momentarily (about 0.5 seconds max.) press the Alignment/Blanking button again. The "**A**" will change to "**n**" to indicate the sensor is ready to "learn" the blanking pattern; momentarily press the button again to exit the blanking routine. The sensor blanks the blocked beams and the display changes to "**A.**"; the period following the lefthand digit signifies blanking is active. Press the Alignment/Blanking button for two seconds to exit alignment mode. The EZ-ARRAY stores each channel's signal strength in non-volatile memory and reads "**-. - -**" on the 3-digit display to denote blanking is in use.

Flashing "000" on the 3-Digit Display

When returning to run mode, the receiver determines whether any unblanked beam channels are obstructed. If any channels are obstructed, the new alignment settings are not saved; the receiver flashes zeroes on the display three times and sensing will continue, using the previously set alignment settings. If this occurs, either clear the blocked beams and repeat the alignment routine or repeat the alignment routine and blank the blocked beams.

Gain (Sensitivity Adjust) Button

To change the sensitivity (Gain setting):

1. Press and hold the button for two seconds. The left-hand digit of the 3-digit display will read "L"; the right-hand digit will read "**1**" (high excess-gain) or "**2**" (low-contrast).
2. The sensitivity level can then be toggled between the values 1 and 2.
3. When the desired sensitivity level is displayed, hold the Gain push button for 2 seconds. The sensor returns to run mode.

Inverting the 3-Digit Display

When the sensors is mounted inverted, invert the 3-digit display for readability. For instructions, see "Receiver Gray (Remote Teach) Wire" on page 22. The periods on the three seven-segment indicators do not move when the display is inverted.

Specifications

Emitter/Receiver Range

Standard models: 400 mm to 4 m (16 in to 13 ft)

Short range, low contrast models: 30 mm to 1500 mm (1.18 in to 59 in)

Supply Power Requirements

Emitter/Receiver Pair (Exclusive of Discrete Load): Less than 9 W

Power-up delay: 2 seconds

© Banner Engineering Corp. All rights reserved.
www.bannerengineering.com

Current Draw at 24 V DC

Length (mm)	Emitter (mA)	Receiver (mA)
150	10	10
300	20	25
450	30	40
600	40	60
750	50	75
900	60	90
1050	70	105
1200	80	120
1350	85	135
1500	95	150
1650	105	170
1800	115	185
1950	125	200
2100	135	215
2250	140	230
2400	150	245

Serial Communication Interface

EIA-485 Modbus RTU (up to 15 nodes per communication ring)

RTU binary format

Baud Rate: 9600, 19.2K or 38.4K 8

Data Bits, 1 Stop Bit, and Even, Odd, or 2 Stop Bits and No Parity

Minimum Object Detection Size

Straight Scan, Low-Contrast: 5 mm (0.2 in)

Straight Scan, High-Excess-Gain: 10 mm (0.4 in)

See "Scanning Method" on page 28 for other scan mode values; size is tested using a rod.

Beam Spacing

5 mm (0.2 in)

Field of View

Nominally ±3°

Light Source

Infrared LED

System Configuration (Receiver Interface)

6-position DIP switch: Used to set scanning type, measurement modes, analog slope, and discrete output 2 function (see "Configuration via DIP Switch or Configuration Software" on page 22)

Push Buttons: Two momentary push buttons for alignment and gain level selection

System Configuration

Configuration software: The supplied software provides all configuration options of the receiver interface, plus additional functionality

Supply Voltage (Limit Values)

Emitter: 12 V DC to 30 V DC

Receiver Analog Current Models: 12 V DC to 30 V DC

Receiver Analog Voltage Models: 15 V DC to 30 V DC

Teach Input (Receiver Gray Wire)

Low: 0 to 2 V

High: 6 to 30 V or open (input impedance 22 K ohms)

Sensor Positional Resolution

Straight Scan: 5 mm (0.2 in)

Double-Edge Scan: 2.5 mm (0.1 in)

Single-Edge Scan: 2.5 mm (0.1 in)

Two Analog Outputs

Voltage Sourcing: 0 to 10 V (maximum current load of 5 mA)

Current Sourcing: 4 to 20 mA (maximum resistance load = $(V_{supply}-3)/0.020$)

Scan Time

Scan times depend on scan mode and sensor length. Straight scan times range from 2.8 to 26.5 ms. For all combinations, see "Maximum Scan Times in SIO Mode" on page 29.

Two Discrete Outputs

Protected against false pulse on power-up and continuous overload or short circuit.

Solid-State NPN or PNP (current sinking or sourcing)

Rating: 100 mA maximum each output

OFF-State Leakage Current: NPN: less than 200 µA at 30 V DC; PNP: less than 10 µA at 30 V DC

ON-State Saturation Voltage: NPN: less than 1.6 V at 100 mA; PNP: less than 2.0 V at 100 mA

Connections

Communication Interface: The receiver uses a PVC jacketed, 5-conductor 22-gauge quick-disconnect cable, 5.4 mm diameter

Other sensor connections: 8-conductor quick-disconnect cables (one each for emitter and receiver), ordered separately; PVC-jacketed cables measure 5.8 mm diameter, have shield wire; 22-gauge conductors

Construction

Aluminum housing with clear-anodized finish; acrylic lens cover

Environmental Rating

IP65

Operating Conditions

–40 °C to +70 °C (–40 °F to +158 °F)

95% at +50 °C maximum relative humidity (non-condensing)

Certifications

Banner Engineering BV
Park Lane, Culliganlaan 2F bus 3
1831 Diegem, BELGIUM

Turck Banner LTD Blenheim House
Blenheim Court
Wickford, Essex SS11 8YT
GREAT BRITAIN

IO-Link®

Standard Bracket Dimensions

Dimensions are identical for model EZA-MBK-11N stainless steel brackets.

© Banner Engineering Corp. All rights reserved.
www.bannerengineering.com

EZA-MBK-11

- Two end-cap replacement brackets for one emitter/receiver
- 8-ga. cold-rolled steel with black corrosion-resistant zinc chromate finish
- M5 and M6 mounting hardware
- CAD Files: DXF, PDF, IGS, STP

Hole center spacing: A to B = 20
Hole size: A , B = 15 × 7, C = ø 21.5

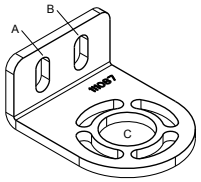

Supplied with emitters and receivers over 1050 mm.

EZA-MBK-12

- Two-piece center bracket for one emitter/receiver
- 8-ga. cold-rolled steel with black corrosion-resistant zinc chromate finish
- M5 and M6 mounting hardware
- CAD Files: DXF, PDF, IGS, STP

Hole center spacing: A = 20, A to B = 36
Hole size: A = ø 7, B = ø 8.3

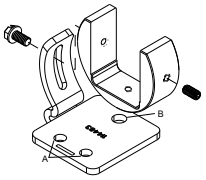

Emitter and Receiver Dimensions

All measurements are listed in millimeters, unless noted otherwise. The measurements provided are subject to change.

Dimensions drawing

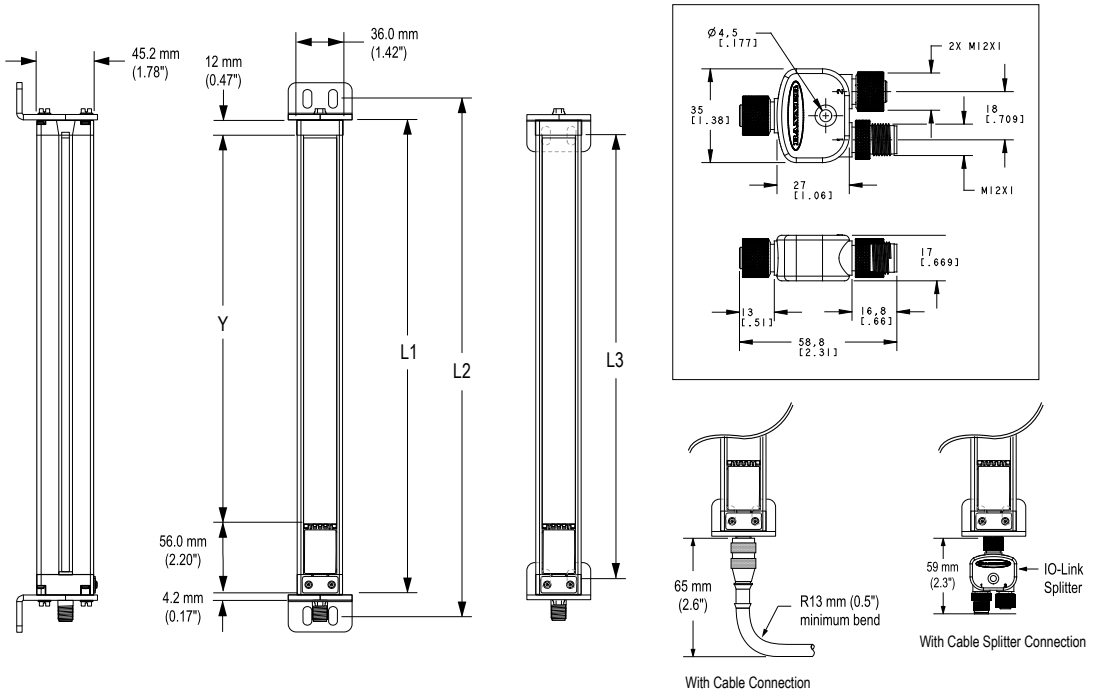

Dimensions for each model

Emitter or Receiver Model	Housing Length L1	Distance Between Bracket Holes L2 L3		Defined Area Y
EA5..150..	227 mm (8.9 in)	260 mm (10.2 in)	199 mm (7.8 in)	150 mm (5.9 in)
EA5..300..	379 mm (14.9 in)	412 mm (16.2 in)	351 mm (13.8 in)	300 mm (11.8 in)
EA5..450..	529 mm (20.8 in)	562 mm (22.1 in)	501 mm (19.7 in)	450 mm (17.7 in)

Continued on page 15

© Banner Engineering Corp. All rights reserved.
www.bannerengineering.com

Continued from page 14

Emitter or Receiver Model	Housing Length L1	Distance Between Bracket Holes L2 L3		Defined Area Y
EA5..600..	678 mm (26.7 in)	704 mm (27.7 in)	650 mm (25.6 in)	600 mm (23.6 in)
EA5..750..	828 mm (32.6 in)	861 mm (33.9 in)	800 mm (31.5 in)	750 mm (29.5 in)
EA5..900..	978 mm (38.5 in)	1011 mm (39.8 in)	950 mm (37.4 in)	900 mm (35.4 in)
EA5..1050..	1128 mm (44.4 in)	1161 mm (45.7 in)	1100 mm (43.3 in)	1050 mm (41.3 in)
EA5..1200..	1278 mm (50.3 in)	1311 mm (51.6 in)	1250 mm (49.2 in)	1200 mm (47.2 in)
EA5..1500..	1578 mm (62.1 in)	1611 mm (63.4 in)	1550 mm (61.0 in)	1500 mm (59.1 in)
EA5..1800..	1878 mm (73.9 in)	1911 mm (75.2 in)	1850 mm (72.8 in)	1800 mm (70.9 in)
EA5..2100..	2178 mm (85.7 in)	2211 mm (87.0 in)	2150 mm (84.6 in)	2100 mm (82.7 in)
EA5..2400..	2478 mm (97.6 in)	2511 mm (98.9 in)	2450 mm (96.4 in)	2400 mm (94.5 in)

© Banner Engineering Corp. All rights reserved.
www.bannerengineering.com

Chapter Contents

Mounting the Emitter and Receiver 16
Mechanical Alignment 17
EZAR Wiring Diagrams 18
Communication Interface 18
Inputs 19
Outputs 19
Optical Alignment 20

Chapter 2 Installation Instructions

Mounting the Emitter and Receiver

Compact EZ-ARRAY emitters and receivers are easy to handle during mounting. When mounted to the sensor end caps, the supplied mounting brackets allow ±30° rotation. An emitter may be separated from 400 mm to 4 m (16 in to 13 ft) from its receiver.

From a common point of reference, make measurements to locate the emitter and receiver in the same plane, with their midpoints and display ends directly opposite each other. (If sensors are mounted with their display ends at the top, see "Receiver Gray (Remote Teach) Wire" on page 22 for directions on inverting the 3-digit display.) Mount the brackets to the emitter and receiver housings using the supplied M6 bolts and Keps nuts, or user-supplied hardware.

Center mounting brackets must be used with longer sensors, if they are subject to shock or vibration. In such situations, the sensors are designed to be mounted with up to 900 mm unsupported distance (between brackets). Sensors 1050 mm and longer are supplied with a center bracket to be used as needed with the standard end-cap brackets.

1. Attach the center bracket to the mounting surface when mounting the end-cap brackets.
2. Attach the clamp to both slots of the housing, using the included M5 screws and T-nuts.
3. After the sensor is mounted to the end-cap brackets, attach the clamp to the center bracket using the supplied M5 screw.

EZ-ARRAY End-Cap Brackets (supplied with each emitter and receiver)		Swivel Center Bracket (supplied with emitters and receivers 1050 mm and longer)
End-Mounted	*Side-Mounted (two sensor brackets may be substituted)*	*Sensors are designed to be mounted with up to 900 mm unsupported distance between brackets.*
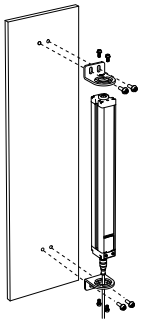	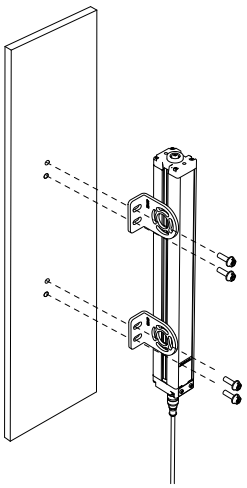	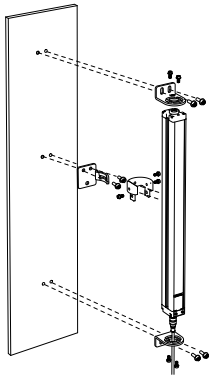

NOTE: Sensor brackets are designed to mount directly to accessory MSA series stands using the hardware supplied with the stands.

© Banner Engineering Corp. All rights reserved.
www.bannerengineering.com

Mechanical Alignment

Mount the emitter and receiver in their brackets and position the windows of the two units directly facing each other. Measure from one or more reference planes (e.g., the building floor) to the same point(s) on the emitter and receiver to verify their mechanical alignment.

Use a carpenter's level, a plumb bob, or the optional **LAT-1-SS** Laser Alignment Tool, or check the diagonal distances between the sensors, to achieve mechanical alignment.

Mechanical alignment

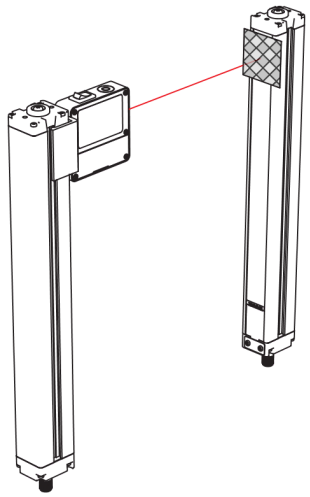

When alignment is difficult, use alignment tool **LAT-1-SS** to assist or confirm alignment by providing a visible red dot along the sensor's optical axis. Snap the **LAT-1** clip onto the sensor housing, turn on its laser emitter, and use a strip of retroreflective tape at the opposite sensor to see the dot.

Also check "by eye" for line-of-sight alignment. Make any necessary final mechanical adjustments, and hand-tighten the bracket hardware. See "Optical Alignment" on page 20 and "Alignment/Blanking Button (Electronic Alignment)" on page 12 for further alignment information.

Verify that:

- The emitter and receiver are directly opposite each other, and nothing is interrupting the beams.
- The sensing area is the same distance from a common reference plane for each sensor.
- The emitter and receiver are in the same plane and are **level/plumb and square to each other** (vertical, horizontal, or inclined at the same angle, and not tilted front-to-back or side-to-side).

Verify the emitter and receiver are in the same plane and level/square to each other

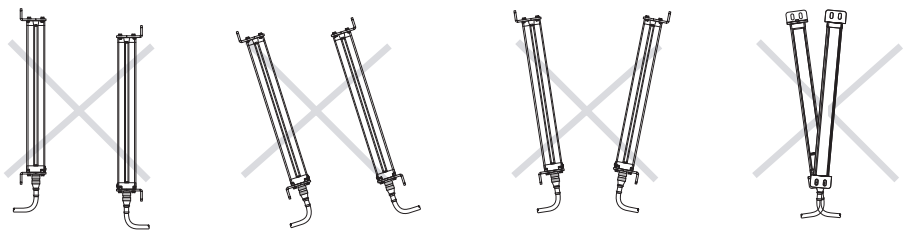

For **angled or horizontal Installations,** verify that:

- Distance X at the emitter and receiver are equal.
- Distance Y at the emitter and receiver are equal.

© Banner Engineering Corp. All rights reserved.
www.bannerengineering.com

- Distance Z at the emitter and receiver are equal from parallel surfaces.
- Vertical face (i.e., the lens) is level/plumb.
- Sensing area is square. Check diagonal measurements if possible; see "Figure: Vertical installations" on page 18.

Angled or horizontal installations

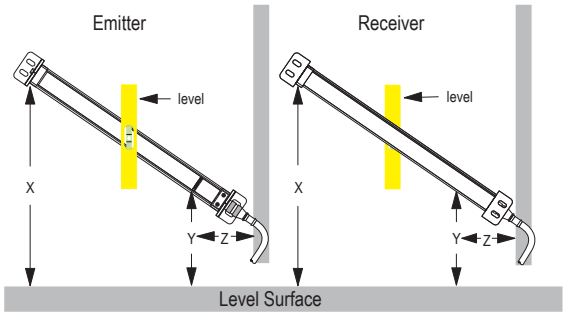

For **vertical installations,** verify that:

- Distance X at emitter and receiver are equal.
- Both sensors are level/plumb (check both the side and face).
- Sensing area is square. Verify diagonal measurements if possible (Diagonal A = Diagonal B).

Vertical installations

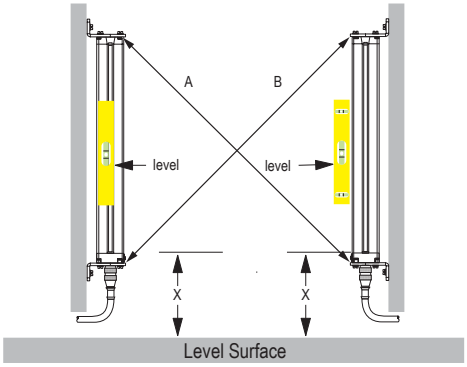

EZAR Wiring Diagrams

Sync (Pink) Wire: The emitter and receiver are electrically synchronized via the pink wire. The emitter and receiver pink wires must only be electrically connected together.

Communication Interface

This connection is used only when the configuration software is also used. The receiver has a Modbus 485 RTU serial interface. A separate 5-pin M12 connection is provided at the end opposite from the power cable connection to electrically connect the serial communication cable to an external PC or PLC. The white wire is connected to the Modbus D1/B/+ terminal and the black wire is connected to the D0/A/- terminal.

© Banner Engineering Corp. All rights reserved.
www.bannerengineering.com

Wiring diagram

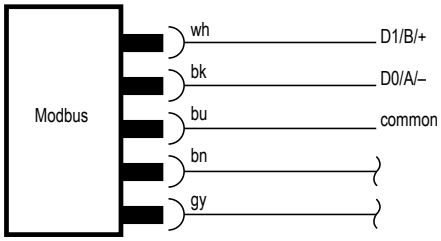

Inputs

Receiver gray wire: The receiver has an input that can be used as a gate input or for remote teach. To initiate remote teach, alignment, and gating functions, tie the wire through a switch to sensor common. For more information, see "Configuration via DIP Switch or Configuration Software" on page 22.

Outputs

Analog white and yellow wires: The receiver has two analog outputs. Depending on receiver model, both outputs are either voltage or current. The white wire is referenced as analog output 1; the yellow wire is referenced as analog output 2. Both analog current and voltage will source current through an external load to sensor common.

Discrete Outputs: The receiver has two discrete outputs; the green wire is referenced as discrete output 1, and the red wire is referenced as discrete output 2. Depending on model, both outputs are either NPN or PNP, unless the polarity is altered via the configuration software. Refer to Specifications for further electrical requirements.

NPN wiring

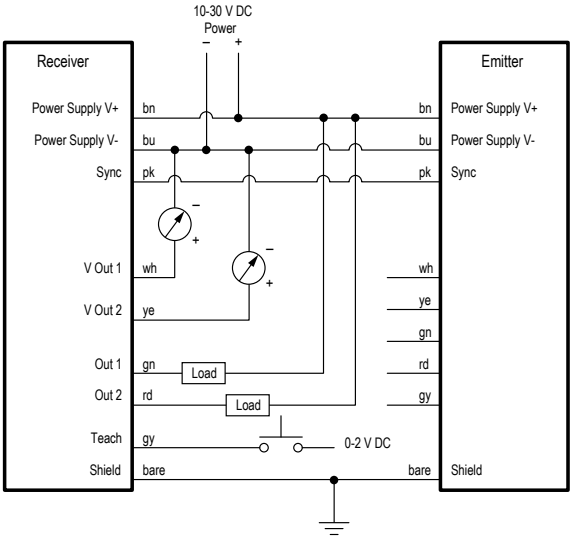

© Banner Engineering Corp. All rights reserved.
www.bannerengineering.com

PNP wiring

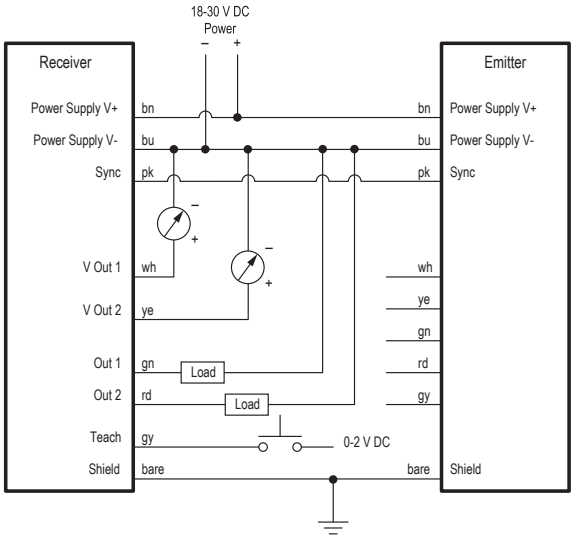

Optical Alignment

The objective of the optical alignment process is to adjust the emitter light level to maximize sensor performance. Perform the alignment procedure at installation and again whenever the emitter and/or receiver is moved.

During the alignment procedure, the receiver polls each beam channel to measure excess gain and performs a gain adjustment for each beam. When the system exits the alignment procedure, each channel's signal strength is stored in non-volatile memory.

The procedure can be performed using the receiver remote wire, the receiver interface push button or the configuration software. (See "Receiver Gray (Remote Teach) Wire" on page 22 and "Alignment/Blanking Button (Electronic Alignment)" on page 12.) The receiver's Alignment push button may be disabled, by configuration thru the configuration software.

1. After the electrical connections are made, power up the emitter and receiver.
2. Verify input power is present to both emitter and receiver; the emitter Status indicator and the receiver Status LED should be ON green. If the receiver Status LED is on red (and a "**c**" appears on the 3-digit display), refer to the error codes. ("Error Codes" on page 67)

   NOTE: At power-up, all Zone indicators are tested (flash red), then the number of blocked beams is displayed.

3. Observe the receiver indicators.
4. Optimize Alignment and Maximize Excess Gain:
   a. Verify the emitter and receiver are pointed squarely at each other. A straightedge or level can help determine the direction the sensor is facing.
   b. Slightly loosen the sensor mounting screws and rotate one sensor to the left and right, noting the positions where the receiver Zone indicators turn from green to red; repeat with the other sensor.
   c. Center each sensor between the noted positions and tighten the end cap mounting screws, making sure to maintain the positioning. The sensor windows should directly face each other.
5. After optimum optical alignment is verified, proceed to configuration, via the remote teach wire, the receiver interface, or the configuration software ("Receiver Gray (Remote Teach) Wire" on page 22, "Alignment/Blanking Button (Electronic Alignment)" on page 12, or Using the Banner Sensor GUI Software)) and complete the electronic alignment. This further alignment step adjusts the emitted light level of each beam for the application, to maximize sensing performance.

© Banner Engineering Corp. All rights reserved.
www.bannerengineering.com

Optical alignment

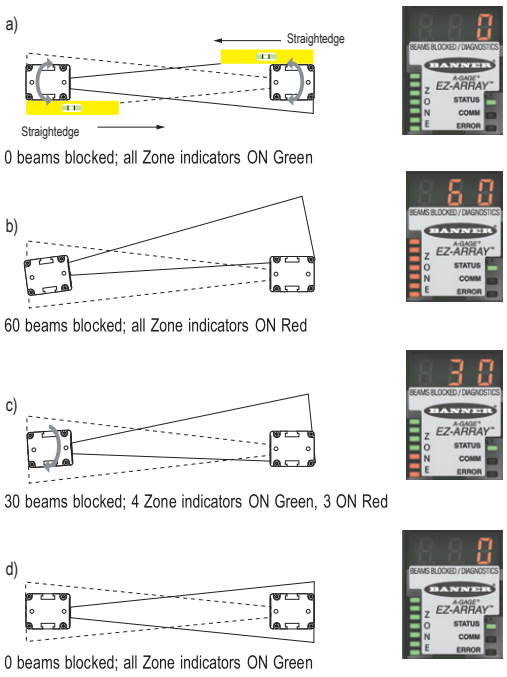

Receiver interface indicators during alignment

	All Beams Either Clear or Blanked	Some Beams Blocked or Mis-Aligned	Out of Alignment
Zone Indicators	All ON Green	Some ON Red (zones with blocked beams) Some ON Green (zones with all clear beams)	All ON Red (Some beams blocked in each zone)
Receiver Status Indicator	ON Green	ON Green	ON Green
3-Digit Display	0 (Number of blocked beams)	Number of blocked beams	Total number of beams in the array

© Banner Engineering Corp. All rights reserved.
www.bannerengineering.com

Chapter Contents

Configuration via DIP Switch or Configuration Software 22
Receiver Gray (Remote Teach) Wire 22
Gain Configuration 23
Blanking 24
Measurement Mode Selection 24
"Beam Location" Modes 24
"Beam Total" Modes 25
Outputs 27
Scanning Method 28

Chapter 3 Configuration Instructions

Configuration via DIP Switch or Configuration Software

Commonly used configuration options can be set up easily via a six-position DIP switch located behind a hinged clear access panel on the front of the receiver.

Access to the DIP switch can be prevented by using the screw-on security plate to hold the clear access panel closed or by disabling them via the configuration software.

For more advanced, individualized applications, use the supplied Using the Banner Sensor GUI Software software program to configure the receiver. The menu-driven program easily accesses the many scanning and output options. After the desired options are selected, the combination of selections can be saved in an .xml file, stored in the system configuration computer, and recalled as needed. Communication between the sensors and a PC is accomplished via the serial output and Modbus 485 RTU interface.

The software also provides alignment and diagnostics routines. An Alignment screen displays the individual status of each beam in the light screen, as well as the total number of beams, and totals of beams blocked, made, and blanked. Built-in diagnostics can be used to assess emitter and receiver status.

Receiver Gray (Remote Teach) Wire

The receiver gray (remote teach) wire is used to electronically emulate the receiver push button functions (see Troubleshooting and Error Codes) via a process controller, to disable the DIP switches for security, or to provide a gate input to initiate sensor scanning. Connect a normally open switch between the receiver's gray wire and dc common, or connect the gray wire to a digital input (PLC) and pulse the wire as indicated in "Status Indicators" on page 8.

NOTE: A low level is 0 to 2 volts and a high level is 10 to 30 volts or circuit open. Input impedance is 22k.

Remote TEACH/Gate in the System Config view of the PC interface Setup screen ("Outputs" on page 27) determines the functionality of the receiver gray wire.

- **Disabled**—(selected via the configuration software only) the remote wire has no function (regardless of whether it is low or high). When the gray wire is disabled, the receiver is in continuous scan mode; it begins a new scan immediately after updating the outputs from the previous scan. (Continuous scan is used in most analog output applications and whenever continuous updating of the outputs is acceptable.) The gray wire is always enabled when in DIP switch mode.
- **Remote Teach**—The gray wire provides the full Remote Teach functionality.
- **Alignment/Sensitivity**—This mode is an abbreviated version of Remote Teach. It can perform the alignment and sensitivity adjustment functions, but not the display inversion or DIP switch enable/disable functions.

Gate Mode—Options can be selected via the configuration software only. The gray wire provides a gate input pulse, typically from a dc device such as an NPN-output photoelectric sensor or a PLC discrete output. Refer to "Receiver User Interface" on page 10 for more information.

- **Gate - Active High**—The receiver scans whenever the gate is pulled high.
- **Gate - Active Low**—The receiver scans whenever the gate is pulled low.
- **Gate - Rising Edge**—The receiver scans once for each low-to-high gate transition. (Multiple transitions cannot be faster than the sensor's response for them to be reliably detected.)

© Banner Engineering Corp. All rights reserved.
www.bannerengineering.com

- **Gate - Falling Edge**—The receiver scans once for each high-to-low gate transition. (Multiple transitions cannot be faster than the sensor's response for them to be reliably detected.)

Alignment/blanking configuration with the remote wire

Process		Remote Wire Procedure 0.05 ≤ sec. T ≤ 0.8 sec.	Result
Alignment / Blanking	Access Alignment Mode		**A** appears on 3-digit display
	Access Blanking Mode	*From Alignment Mode:* 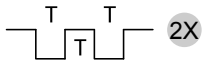	**n** appears on 3-digit display, along with number of blocked beams
	Exit Blanking Mode		**A.** appears on 3-digit display (sensor returns to alignment mode with blanking enabled)
	Exit Alignment Mode		Sensor returns to run mode

Gain, receiver interface, and display configuration with the remote wire

Process		Remote Wire Procedure 0.05 ≤ sec. T ≤ 0.8 sec.	Result
Gain Method	Access Gain Mode	*From Run Mode:* 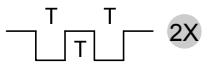	**L** appears on 3-digit display, along with number **1** or **2**, to designate gain level
	Toggle Between Gain Settings		Number changes from number **1** to **2**, back to **1**, etc.
	Save Gain Level and Exit	*When correct level is displayed:* 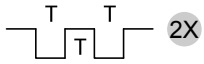	Gain level is configured: **1**=High-excess-gain setting **2**= Low-contrast setting Sensor returns to run mode
Invert Display	Invert Display	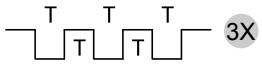	Display inverts from previous state; sensor continues in run mode
Receiver Interface Enable/Disable	Receiver Interface Enable/Disable	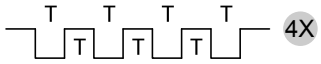	The factory default is Receiver Interface enabled. Four-pulsing the remote line saves the current settings and disables the interface (the sensor continues to operate using the saved settings; changes made to the DIP switch will have no effect). Repeating the process enables the Receiver Interface so that settings can be changed.

Gain Configuration

The EZ-ARRAY provides two gain options for straight scan applications: high excess gain and low contrast. The gain method can be selected using the receiver push button, the receiver remote teach wire, or the configuration software.

High (maximized) excess gain is suited for detecting opaque objects and for reliable sensing in dirtier environments where objects to be detected are 10 mm or larger. The high excess gain method is always used in single- and double-edge scan. The high excess gain option has a minimum blocked threshold level, which provides reliable sensing at higher excess gain levels.

The low-contrast setting is used for sensing semi-transparent materials and for detecting objects as small as 5 mm (straight scan only). In low-contrast operation, only a portion of a beam must be blocked for detection to occur. In low-contrast

© Banner Engineering Corp. All rights reserved.
www.bannerengineering.com

operation, the sensor sets an individual threshold for each optical channel during the alignment process; this process equalizes the signal strength to allow semi-transparent object detection.

When using the configuration software, low-contrast sensing provides a fine-tune sensitivity setting of 15% to 50%. When using the receiver interface, low-contrast sensitivity is always 30%.

On short-range, low-contrast models, sensitivity can be set between 3% to 20% when using the configuration software. When using the receiver interface, low contrast sensitivity is always 7%.

Gain configuration settings

Gain Setting	Scan Method	EZ-ARRAY MODS [3]	EZ-ARRAY Resolution
Low Contrast	Straight Scan	5 mm	5 mm
	Single-edge Scan	-	-
	Double-edge Scan	-	-
High Excess Gain	Straight Scan	10 mm	5 mm
	Single-edge Scan	10 mm	2.5 mm
	Double-edge Scan	Depends on step size	2.5 mm / edge 5 mm total (both edges)

Blanking

If a machine fixture or other equipment blocks one or more sensing beams, the affected beam channels may be blanked. The blanking option causes the receiver to ignore the status of blanked beams for measurement mode calculations.

For example, if a machine fixture blocks one or more beams during sensing, the output data will be incorrect; if the beams blocked by the fixture are blanked, the output data will be correct. Blanking may be configured using the receiver's Alignment push button, the receiver remote wire, or the configuration software.

For total beam values (TBB and TBM analysis modes), selection of blanked beams affects the proportional analog outputs. Blanked beams are ignored both in the number of blocked or made beams and in the total number of beams. For example, if a 30-beam array has 10 blanked beams and 10 of the remaining 20 beams are blocked, the analog output values will be at mid-range.

Measurement Mode Selection

The outputs may be configured for any of the measurement (scan analysis) modes, which refer to specific beam locations, quantities of beams, or edge transitions. Note that not all measurement mode options are available when the receiver interface is used for configuration.

When using the configuration software for configuration, the discrete outputs can have NPN or PNP polarity (regardless of model), be normally open or normally closed, and be assigned to any of the measurement modes. When using the receiver interface, limited output configuration combinations may be selected (see "Configuration via DIP Switch or Configuration Software" on page 22).

NOTE: Array beams are numbered in sequence (beam 1 located nearest the sensor display). The "first beam" referenced in the following descriptions is the beam nearest the sensor display.

"Beam Location" Modes

First Beam Blocked (FBB)

The location of the first blocked beam.

First Beam Made (FBM)

The location of the first made (unblocked) beam.

[3] MODS: Minimum Object Detection Size

© Banner Engineering Corp. All rights reserved.
www.bannerengineering.com

Last Beam Blocked (LBB)

The location of the last blocked beam.

Last Beam Made (LBM)

The location of the last made beam.

Middle Beam Blocked (MBB)

The location of the beam midway between the first and last blocked beams.

"Beam Total" Modes

Total Beams Blocked (TBB)

The total number of blocked beams.

Total Beams Made (TBM)

The number of beams made.

Contiguous Beams Blocked (CBB)

The largest number of consecutively blocked beams.

Contiguous Beams Made (CBM)

The largest number of consecutively made beams.

Outside Dimension (OD)

The inclusive distance (measured in beams) from the first blocked beam to the last blocked beam.

Inside Dimension (ID)

The number of made beams, between the first and last blocked beams.

Transitions (TRN)

The number of changes from blocked to clear status and from clear to blocked status. (If beams 6–34 are blocked, then there is a clear-to-blocked transition from beam 5 to beam 6, and a blocked-to-clear transition from beam 34 to beam 35.) Transition mode can be used to count objects within the array.

Contiguous First Beam Blocked (CFBB)

The location of the first blocked beam in the largest group of adjacent blocked beams.

Contiguous Last Beam Blocked (CLBB)

The location of the last blocked beam in the largest group of adjacent blocked beams.

Carpet Nap and Carpet Edge

These measurement modes are used to measure the location of carpet backing and tuft and are selectable only via the configuration software and only when the Scan Type **Carpet Nap** is selected. The modes can be measured from either end of the sensor, but at least 10 beams (2 in) must be blocked from one edge.

© Banner Engineering Corp. All rights reserved.

Measurement mode - LBM-FBM

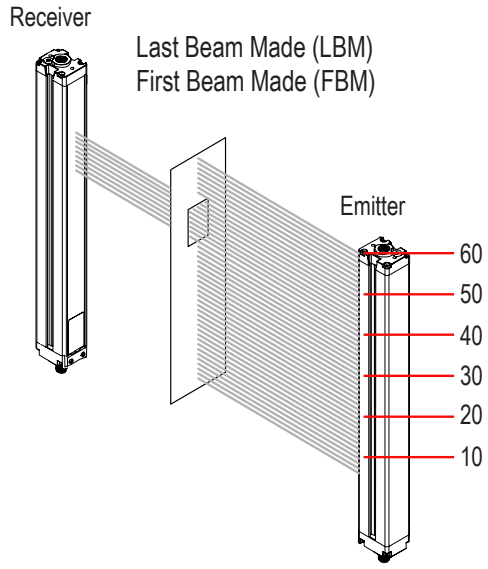

In Last Beam Made mode, the last beam is #50 of 60.

In First Beam Made mode, the first beam is #40 of 60.

Measurement mode - LBB-FBB

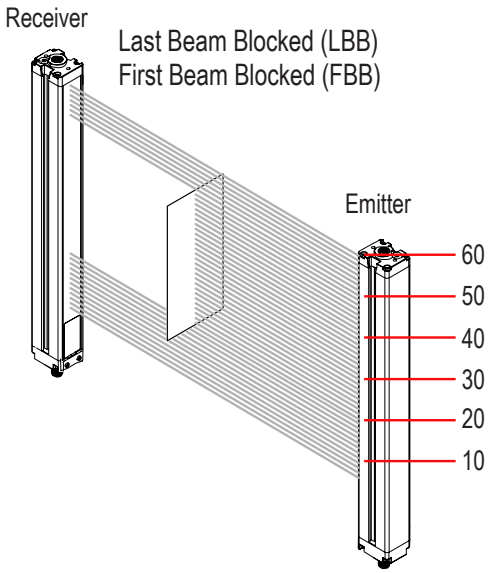

In Last Beam Blocked mode, the last beam is #55 of 60.

In First Beam Blocked mode, the first beam is #20 of 60.

© Banner Engineering Corp. All rights reserved.
www.bannerengineering.com

Measurement mode - TBM-TBB

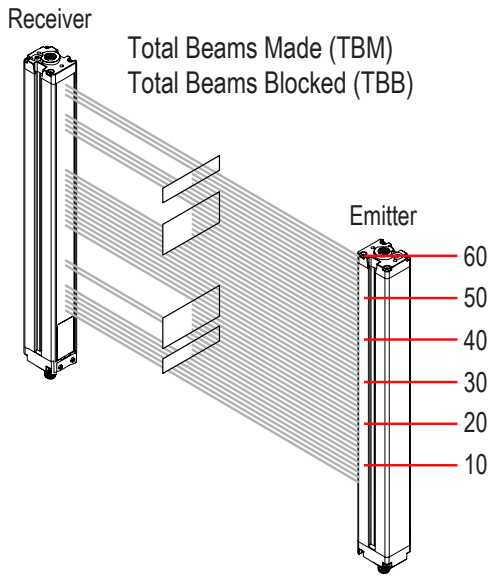

In Total Beams Made mode, 38 of 60 possible beams are made.

In Total Beams Blocked mode, 22 of 60 possible beams are blocked.

Outputs

In addition to the serial output (see above), all models have two analog outputs and two discrete outputs.

The analog outputs are 4–20 mA or 0–10 V, depending on the model. They may be configured for either a positive or negative slope via DIP switch or configuration software.

Discrete output 1 is always used for measurement; discrete output 2 may be used either for alarm or measurement operation (selectable via DIP switch or configuration software). When the receiver interface is used, discrete output 1 follows the operation of analog output 1 (it conducts when the analog output senses a target is present). When the configuration software is used for configuration, both discrete outputs have full configurability, including measurement mode, NPN or PNP polarity, and normally open or normally closed operation.

Analog Output Configuration

Analog output configuration assigns analog outputs 1 and 2 to one of the measurement modes described in Measurement Mode Selection. When the selected measurement mode involves first or last beam blocked or made (unblocked), the assigned output will vary in proportion to the beam number identified during a scan. When the measurement mode involves total beams blocked or made, that assigned output will vary in proportion to the total beams counted during a scan.

Analog outputs may have a filter setting (to smooth the output) and Zero Value (to specify the output value when the measurement mode value is zero) set in the configuration software.

Discrete Output Configuration

Discrete Output 1; Receiver Interface

When the receiver interface is used for configuration, the measurement mode assigned to discrete output 1 is the same as that assigned to analog output 1. When the analog output detects a target present, discrete output 1 conducts (normally open).

Discrete Output 2; Receiver Interface

Discrete output 2 (only) has two options: alarm and complementary (measurement) operation.

Alarm—Output 2 energizes when the receiver detects a sensor error (such as a disconnected cable) or whenever the excess gain of one or more beams becomes marginal.
Complementary (Measurement)—Discrete output 2 operation is complementary to discrete output 1 (when output 1 is ON, output 2 is OFF, and vice versa).

© Banner Engineering Corp. All rights reserved.
www.bannerengineering.com

Discrete Output 1 and 2 Configuration; Configuration Software

When the configuration software is used for configuration, the discrete outputs have more options: either discrete output can be assigned to any of the measurement modes, high and low set points can be added, the outputs can be inverted, and hysteresis values can be set, as well as a scan number to smooth output performance. Discrete output 2 can be assigned to alarm mode via the configuration software also.

Scanning Method

One of three scanning methods may be configured:

- Straight Scan
- Single-edge Scan
- Double-edge Scan (1, 2, 4, 8, 16, or 32 steps)

Sensor response time is a function of sensor length and scanning method. Maximum scan times are shown in "Maximum Scan Times in SIO Mode" on page 29.

Scanning Method	Straight Scan		Single-Edge Scan	Double-Edge Scan (per Edge)					
				Step Size (Number of Beams)					
	Low-Contrast	High-Excess-Gain		1	2	4	8	16	32
Minimum Object Detection Size[4]	5 mm (0.2 in)	10 mm (0.4 in)	10 mm (0.4 in)	10 mm (0.4 in)	20 mm (0.8 in)	30 mm (1.2 in)	50 mm (2 in)	90 mm (3.6 in)	170 mm (6.8 in)
Edge Resolution	5 mm (0.2 in)	5 mm (0.2 in)	2.5 mm (0.1 in)	2.5 mm (0.1 in)	2.5 mm (0.1 in)	2.5 mm (0.1 in)	2.5 mm (0.1 in)	2.5 mm (0.1 in)	2.5 mm (0.1 in)

Straight Scan

Straight Scan is the default mode, in which all beams are scanned in sequence, from the display end to the far end of the array. This scanning method provides the smallest object detection size.

Straight scan is used when low-contrast sensitivity is selected or when single-edge and double-edge scan cannot be used. The edge resolution is 5 mm (0.2 in). When low-contrast sensing is selected (used when measuring semi-transparent objects), the minimum object detection size is 5 mm (0.2 in) diameter. When high-excess-gain sensing is selected, the minimum object detection size is 10 mm (0.4 in).

Single-Edge Scan

Single-Edge Scan is used to measure the height of a single object. This scanning method is commonly used for box height measurement. For single-edge scan, the receiver always activates the first beam channel (or "bottom" beam, nearest the display). When the first beam is blocked, the sensor performs a binary search to hunt for the last beam blocked, as follows:

1. The receiver scans only the first beam until it is blocked.
2. When the first beam is blocked, the sensor looks to see whether the middle beam is blocked or made (unblocked).
3. If the middle beam is made (unblocked), the sensor checks the bottom quarter beam; if the middle beam is blocked, the sensor checks the top quarter beam.
4. The routine continues to divide the number of beams in half until the edge is found.

Single-edge scan can be used only for single, solid objects that block the first beam (closest to the display). Because the receiver checks only the first beam until it is blocked, single-edge scan will not function when the item to be measured does not block the first beam. Single-edge scan is also ineffective if the object does not present a continuous blocked pattern.

Single-edge scan works only when the high-excess-gain setting is enabled. When single-edge scan is selected, the sensor object detection size is 10 mm and edge resolution is 2.5 mm.

Double-Edge Scan

Double-edge scan is used to detect two edges of a single object, for example, to determine box width measurements. Double-edge scan requires the selection of a step size: 1, 2, 4, 8, 16 or 32 beams.

The sensor uses the steps to "skip" over beams, as follows:

[4] MODS determined using a rod target object

© Banner Engineering Corp. All rights reserved.
www.bannerengineering.com

1. The sensor activates beam 1 (closest to the sensor display end).
2. The sensor activates the next beam, determined by the step size. (For example, if the step size is 2, beam 3 is next; if the step size is 8, beam 9 is next.)
3. As long as the activated beam is made (unblocked), the sensor continues the stepping routine until a blocked beam is found.
4. When a blocked beam is found, a binary search is conducted to find the object's "bottom" edge.
5. When the bottom edge is found, the sensor continues to step through the array until it finds the next unblocked beam.
6. Another binary search is performed to find the second edge.

Similar to single-edge scan, double-edge scan has some restrictions: the object should provide a solid obstruction; the size of the object determines the maximum step size. Double-edge scan can be used to detect up to three objects. Like single-edge scan, double-edge scan works only when the high-excess-gain setting is selected. When double-edge scan is selected, the sensor object detection size varies, depending on the step size, but edge resolution is 2.5 mm.

Double-edge scan

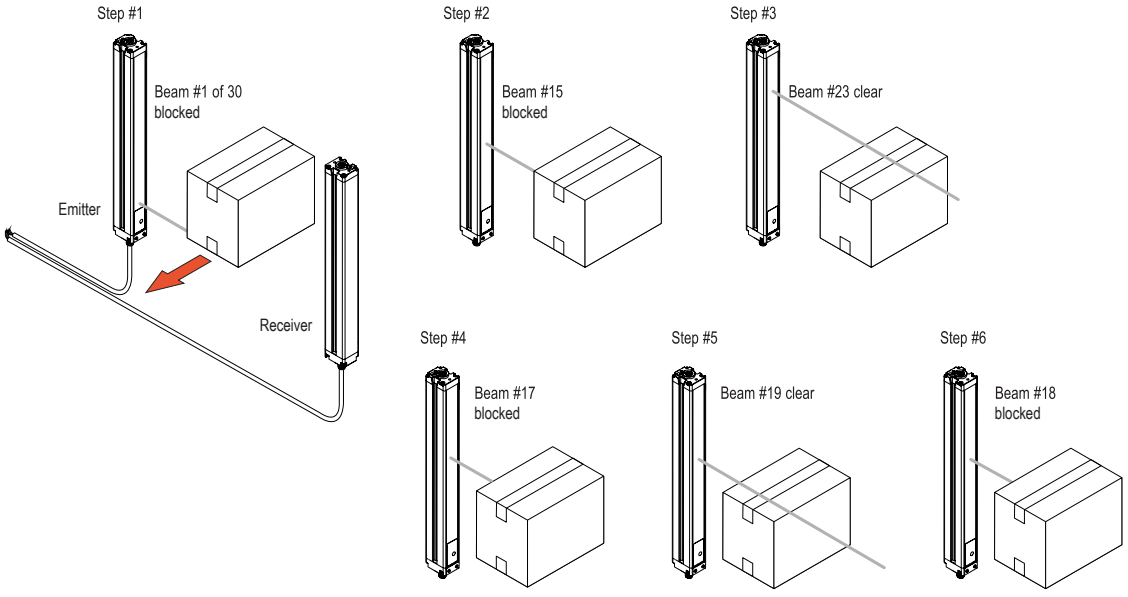

Maximum Scan Times in SIO Mode

Maximum scan times (in milliseconds) during SIO mode

Array Length	Straight Scan	Single-Edge Scan	Double-Edge Scan					
			Step 1 Beam	Step 2 Beams	Step 4 Beams	Step 8 Beams	Step 16 Beams	Step 32 Beams
150 mm (5.9 in)	2.8	1.5	3.4	2.8	2.5	2.4	1.9	N/A
300 mm (11.8 in)	5.0	1.5	5.9	4.1	3.2	2.8	2.3	2.1
450 mm (17.7 in)	7.1	1.6	8.5	5.5	4.2	4.0	3.2	2.5
600 mm (23.6 in)	9.3	1.6	11.0	6.8	4.9	4.2	4.0	2.8
750 mm (29.5 in)	11.4	1.7	13.5	8.1	5.7	4.6	4.5	4.5
900 mm (35.4 in)	13.6	1.7	16.0	9.5	6.1	4.7	4.6	4.6
1050 mm (41.3 in)	15.7	1.8	18.6	10.8	6.8	5.2	4.8	4.8
1200 mm (47.2 in)	17.9	1.8	21.1	12.2	7.4	5.5	4.9	4.9
1500 mm (59.1 in)	22.2	1.9	26.1	14.8	9.0	6.4	5.3	4.9
1800 mm (70.9 in)	26.5	2.0	31.2	17.5	10.5	7.3	6.0	5.6

Continued on page 30

© Banner Engineering Corp. All rights reserved.
www.bannerengineering.com

Continued from page 29

Array Length	Straight Scan	Single-Edge Scan	Double-Edge Scan					
			Step 1 Beam	Step 2 Beams	Step 4 Beams	Step 8 Beams	Step 16 Beams	Step 32 Beams
2100 mm (82.7 in)	30.8	2.8	36.3	20.2	12.0	8.2	6.7	5.6
2400 mm (94.5 in)	35.1	2.8	41.4	22.9	13.5	9.1	7.4	5.9

Scan times are exclusive of serial communication transmission times.

Scan times are also dependent on analog filter speed.

© Banner Engineering Corp. All rights reserved.
www.bannerengineering.com

Chapter Contents

Supplied Software 31
Communications Connections 32
Accessing the Software 32
Factory Defaults 34
Alignment and Blanking 34
Configuration Setup 36
System Config View 37
Analog Output Config View 39
Discrete Output Config View 40
Comm Config View 40
Part Number and Version Info View 41
System Diagnostics View 41
Communications Troubleshooting 41
Menu Structure 42

Chapter 4 Using the Banner Sensor GUI Software

The full functionality of the EZ-ARRAY is available using the configuration software, Banner Sensors GUI. Refer to the Overview for a full description of the available sensing modes and other features.

The sensor is easily configured using a Windows® menu-style program via the Banner Sensors GUI and a PC-compatible computer (running Windows XP, Vista®, or WIN7®).

Supplied Software

For the most recent software version, visit www.bannerengineering.com and search for Banner Sensors GUI. Download and install the software.

Double-click on the software icon to launch the program. The main menu screen appears. Verify that **A-GAGE® EZ-ARRAY** is displayed in the **Select a Sensor** field of the screen.

Configuration software main menu screen

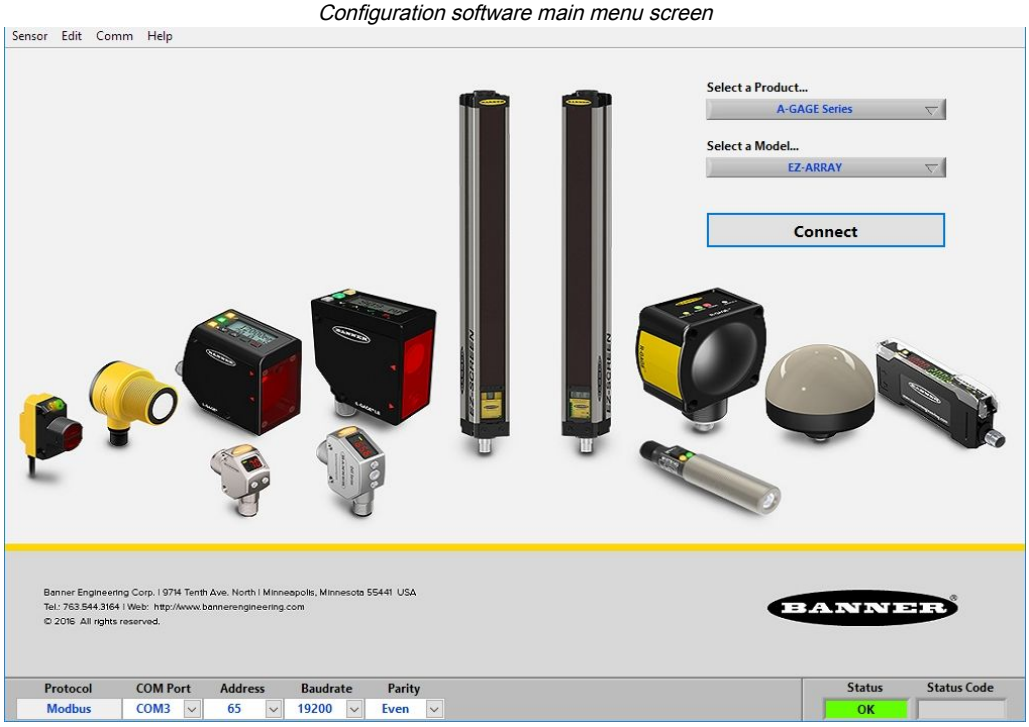

© Banner Engineering Corp. All rights reserved.
www.bannerengineering.com

Communications Connections

An operating EZ-ARRAY system must be connected before the software screens display. There are two options to connect the EZ-ARRAY to your computer.

- RS485-to-RS232 adapter, model INTUSB485-1 USB serial adapter (datasheet p/n 130144) listed in "Cordsets and Connections" on page 46. Instructions for configuring the adapter are included with the adapter.
- EZ-ARRAY RS-485 to USB Adapter Cable, model EZA-USB485-01 (datasheet p/n 148838).

Accessing the Software

With the sensor pair powered up and connected to your PC (as described in "Communications Connections" on page 32), go to **Sensor › Connect** (Ctrl + N).

The **Alignment/Status** screen appears, providing a snapshot of the current sensing alignment status, including the status of each array beam, total numbers of blanked, made and blocked beams, the selected measurements and their values.

The **Alignment/Status** screen has three pull-down menus: **Sensor**, **Options**, and **Help**.

Sensor Menu (Alignment/Status Screen)

When the Alignment/Status screen is active, the **Sensor** menu provides the options **Setup** (Ctrl + S), which is used to modify or view a sensor configuration, **Connect/Disconnect** (Ctrl + N), which connects (or disconnects) the PC to the sensor, and **Exit** (Ctrl + Q). When a setup screen view is active, the **Sensor** menu has other options.

> **TIP:** Most configuration options are not available until the Connect function has linked the PC to a sensor pair.

EZ-ARRAY Alignment/Status screen

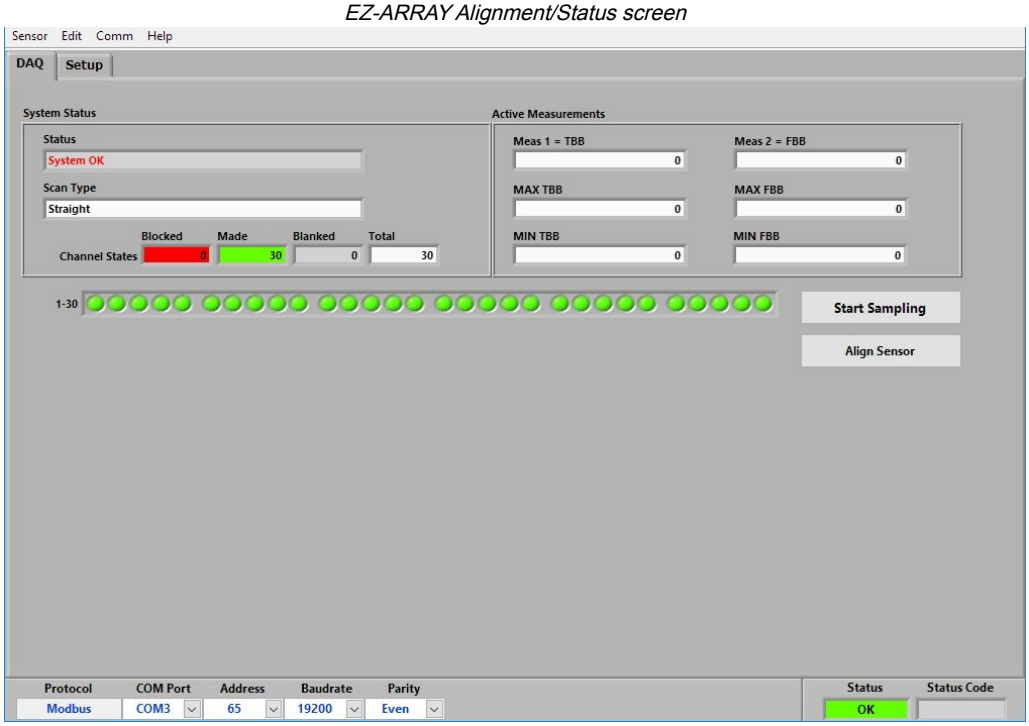

Beam status is displayed using colors. Gray indicates blanked beams in the array. Green indicates "made" (clear" beams. Red indicates blocked beams.

Setup

Go to the **Sensor › Setup** menu (Ctrl + S) to modify or view the configuration of the connected sensor pair.

© Banner Engineering Corp. All rights reserved.
www.bannerengineering.com

Connect/Disconnect

To disconnect from a pair of sensors, select **Disconnect** (Ctrl+N) from the Sensor menu.

Exit

To quit the program, select **Exit** (Ctrl+Q) from the **Sensor** menu or click on the X in the upper right-hand corner of the screen.

Sensor Menu (Setup Screen)

When a setup screen view is active, the sensor menu includes the read, write, and save configuration options, plus Close.

Reading, Writing, and Saving Configurations

When a configuration is complete, it can be written to the sensors and it can also be saved in an .xml file on your computer. The following commands can be accessed in several ways, including buttons on individual Setup screen views and in the **Sensor** menu while a **Setup** screen is active.

Before you make configuration changes using the software, save a copy of the sensor's original configuration.

Use the **Read** button to read the current configuration for the displayed Setup view from the sensor. If a change is made to any configuration field, it remains highlighted in yellow on the PC screen until it is written to the sensor via the **Write** button. The **Write** button writes configuration changes for the selected Setup view only.

The **Read ALL** and **Write ALL** menu items read or write configuration parameters between the GUI and sensor for **ALL** setup view fields, regardless of the view selected, including the factory-calibrated Null and Span settings. Alignment and Blanking configuration information can be accessed only via the **Alignment/Status** screen.

The **Save Config** menu item is used to save a configuration file to your PC for later retrieval. Use the **Open Config** menu item to retrieve a file from the PC in order to write it to a sensor. The **Recent Configs** menu item provides a shortcut to recently used configuration files.

Close

To return to the **Alignment/Status** screen from any **Setup** screen view, click **Close** (Ctrl+Q) or click on the X.

Options Menu

The **Options** menu provides the pull-down menu options **Communication Settings** (Ctrl + M), where the COM port may be selected, and **Debug** (Ctrl+D), which may be helpful during troubleshooting. **Power Cycle** and **10 Click** are not used for the EZ-ARRAY.

The first time the system is used, or when changes need to be made to the communications configuration, select **Options › Communication Settings** (Ctrl + M) from the menu to configure the PC serial communications port.

The resulting Communication Settings window has an **Advanced** or **Basic** option. When **Basic** is selected, only the fields **Select a Product**, **COM Port**, and **Echo Suppression Options** are listed. To access the **Advanced** menu, select **Options › Advanced Settings** (Ctrl + U) from the **Communication Settings** menu. All communication fields are listed.

Options menu, Alignment/Status screen, and resulting Communication Settings screen

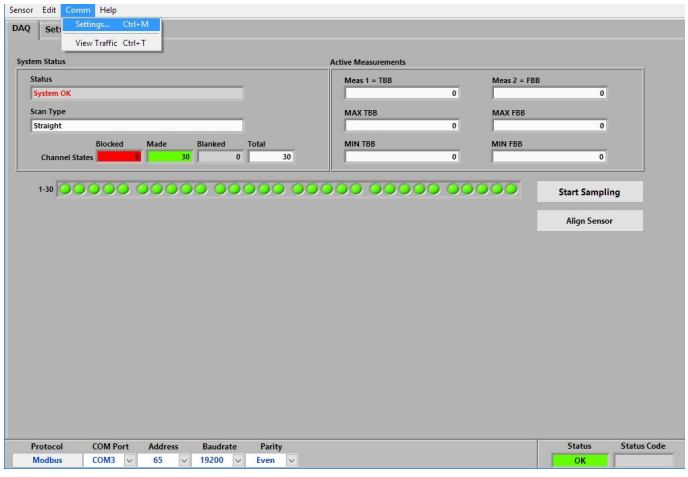

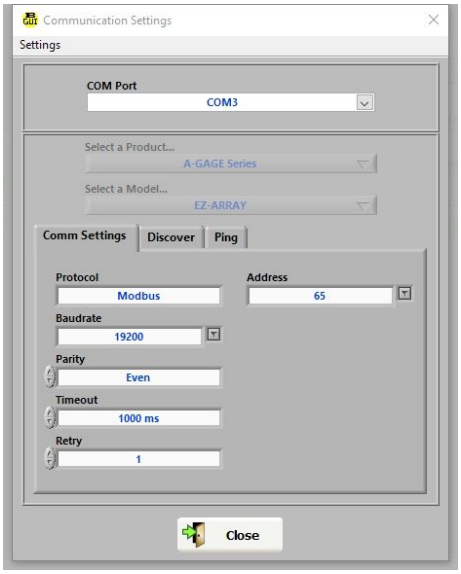

COM Port

Selects the computer port used for serial communication with the sensor (COM1, COM2, . . . COM20).

Baud Rate

Data communication rate between the sensor and the computer used for configuration. Choose from three options: 9600, 19200 (default), and 38400.

© Banner Engineering Corp. All rights reserved.
www.bannerengineering.com

Address
Determines the sensor address (from 1 to 247; factory default is 65) on the Modbus network.

Timeout
Determines how long (in ms) the PC will wait for a response from the sensor. Default is 1000 ms.

Msg Delay
Injects a delay (pause) between messages between the software and a sensor (in ms).

Protocol (Modbus)
Do not select Bannerbus.

Parity
Select Odd, Even (default), or None.

Retry
Number of times the GUI will attempt communication with the sensor.

Options (DPB1, No Echo Suppression, or Echo Suppression)
EZ-ARRAY requires either DPB1 or No Echo Suppression for communication.

Help Menu

Go to the **Help** (Ctrl + A) menu to access system version information. This is needed if you need to contact Banner Engineering for help.

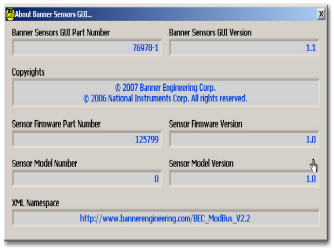

Factory Defaults

Factory default selections in this section are designated. To reconfigure a sensor to the factory default options, access the .xml default file from the folder **Banner Engineering › Banner Sensors GUI › Configs › Defaults** (see "Supplied Software" on page 31).

This changes all the setup fields in the GUI to the default values, which can then be reviewed and/or written to the sensor.

> **IMPORTANT:** If reverting a configuration to the default values, first record the sensor's factory-calibrated Null and Span values, so they can later be written to the sensor.

Alignment and Blanking

When the **Alignment/Status** screen is first displayed (see "Accessing the Software" on page 32), two functions can be performed: **Start Sampling** and **Align Sensor**.

The System Alignment screen Channel States display can be used to see an ongoing, realtime display of sensing status. Click on **Start Sampling**; the **Status** window will read **Sampling in Progress** until **Stop Sampling** is selected. When sampling is not active, the Channel States displays are not updated.

The **Channel States** status fields in the screen provide a color-coded, visual status of the number of blocked (red), made (green), and blanked (gray) channels. The selected sensor scan type is displayed in the Scan Type text field. The "blanked" value is a count of the beam channels that are ignored when the sensor applies the current blanking configuration to the selected measurement mode (see "Measurement Mode Selection" on page 24). The "blocked" value is a count of blocked beams, excluding any blanked beams. The "made" value is a count of unblocked and unblanked beams. The total number of beams blocked, made, and blanked will always equal the total number of sensor beam channels. Below this row of text boxes is a graphic display that depicts the status of each individual beam, color-coded to the totals boxes above it. This graphic display may be used both to view which beams are blocked or blanked and also to blank individual beams.

The Active Measurements status fields depict the active (selected) measurement modes (up to two), with the present value for each, plus a history of the minimum and maximum values recorded during the sampling of a target, held until a new target is presented. This **sampling tool** is useful for setting the sensor discrete output levels, for verifying sensor operation, and for proving out an application.

© Banner Engineering Corp. All rights reserved.
www.bannerengineering.com

Perform electronic alignment when the sensor is first installed, and repeat whenever the emitter or receiver (or both) is moved. Electronic alignment also can be initiated using the remote TEACH line or the Alignment switch on the receiver's front panel (see Sections "Receiver Gray (Remote Teach) Wire" on page 22 and "Alignment/Blanking Button (Electronic Alignment)" on page 12).

The electronic alignment routine adjusts the emitted light level to maximize sensor performance. When the system exits alignment, the sensor records and stores channel signal strength and blanking information in non-volatile memory until electronic alignment is performed again. Perform the procedure at installation and again whenever the emitter and/or receiver is moved. (For Receiver interface software alignment instructions, see "Alignment/Blanking Button (Electronic Alignment)" on page 12.)

Align the Sensor Electronically

The electronic alignment procedure, once initiated, cannot be exited without completing the entire routine (there is no “exit without save” option).

1. To align the sensor from the PC, press the **Align Sensor** button on the **System Alignment** screen.

   While the sampling is taking place, the **Status** field of the **System Alignment** screen will read **Alignment Sampling in Progress**.
2. After the sensor is aligned and all unobstructed beams are detected as made beams, press **Stop Sampling**.

   The **Status** window will read **Alignment in Progress**. When the alignment sampling stops, additional options become enabled on the **Alignment** screen: **Save and Exit Alignment**, **Auto Blanking**, **Clear Blanking Fields**, **Undo Edits** (if any blanking changes were made), **Save Config**, and **Open Config**.
3. If necessary, physically adjust the emitter and/or receiver until the diagnostic display of the **Alignment** screen indicates that all unblocked beams are made (no red circles).
4. If any beams are blocked, they must either be cleared or blanked to save the alignment settings.
5. Click **Save & Exit Alignment** to save the gain adjustment settings.

   The sensor will verify that all non-blanked optical channels are clear. If some channels are not clear (fail), the sensor will not perform the electronic alignment process and will retain the previously saved alignment parameters. If all the non-blanked optical channels are clear (succeed), the sensor will save the new electronic alignment parameters. A message will appear that alignment either succeeded or failed.

If the alignment failed, check for objects that may be blocking one or more beams, or physically adjust the sensors until all beams on the Alignment screen's diagnostic display are green, then repeat the electronic alignment.

To blank individual channels, position the cursor on any of the depicted channels (either red or green circles) and click on it. To unblank any channel, click on a gray circle.

Click on **Auto Blanking** to automatically blank all blocked channels and remove blanking from unblocked channels. Click on **Clear Blanking Fields** to unblank all blanked channels. Click on **Undo Edits** to remove unsaved channel blanking edits.

Click on **Save Config** to save the current set of configuration and blanking settings in an .xml file on your computer that can then be later retrieved and written to the sensor. In the pop-up box, select a storage destination and name the configuration file as desired.

Click on **Open Config** to retrieve a previously saved configuration file. A screen will pop up, allowing you to browse in your computer for the file. When you select a new configuration, the blanking configuration automatically populates the Channel States status fields in the software screens. This applies to blanking configuration information only, not to any other settings.

© Banner Engineering Corp. All rights reserved.
www.bannerengineering.com

System status and active measurements screen

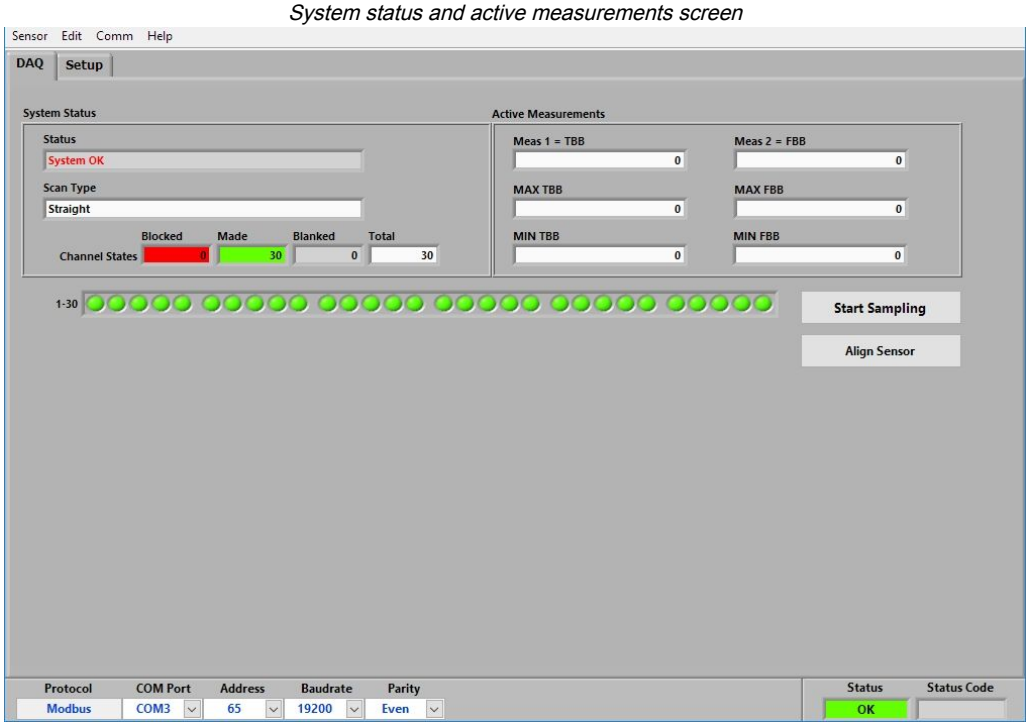

Configuration Setup

To make configuration selections other than blanking and alignment adjustments, use the **Setup** screen. The Setup option is accessible after a connection is established between the PC and the sensor, using the **Connect** option.

Setup Screen

Select **Setup** (Ctrl + S) from the **Sensor** menu to launch the **Setup** screen, which has six views: **System Config**, **Analog Output Config**, **Discrete Output Config**, **Comm Config**, **Part Number and Version Info**, and **System Diagnostics**.

The **Current View** field displays the name of the currently selected view. To switch between views, select from the drop-down list. When any Setup view is displayed, the options in the Sensor menu become:

- READ All (Ctrl + R)
- WRITE All (Ctrl + W)
- Open Config (Ctrl + O)
- Recent Configs (if any exist)
- Save Config (Ctrl + S)
- Close (Ctrl + Q)

© Banner Engineering Corp. All rights reserved.
www.bannerengineering.com

Setup screen

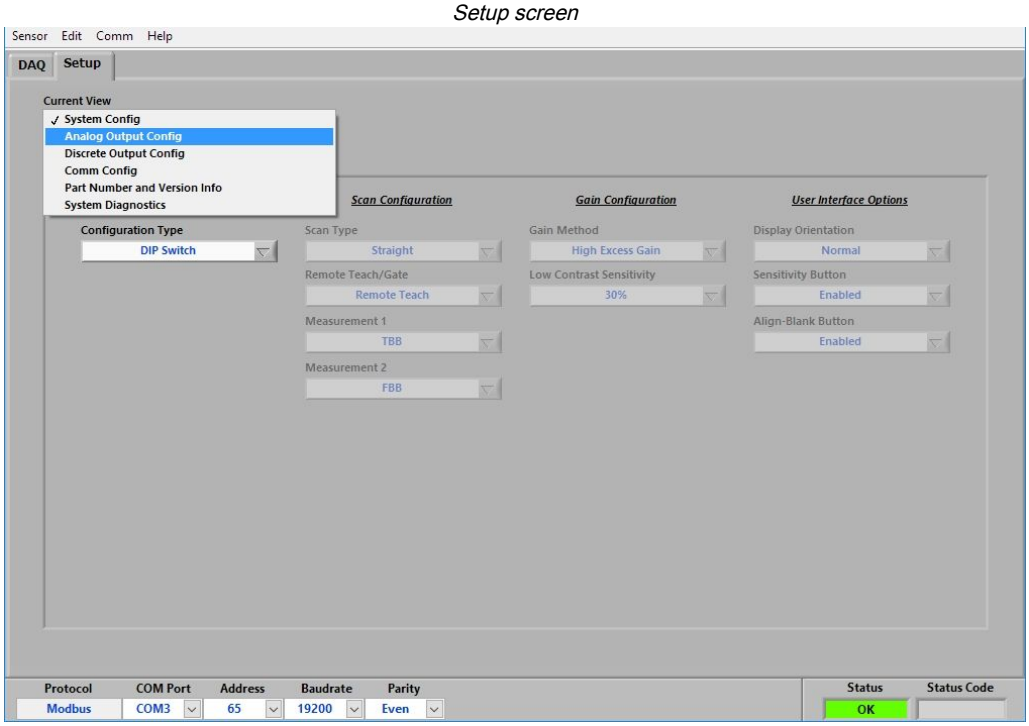

Configuration fields cannot be accessed unless **Advanced** is selected. The window remains yellow until the configuration is written (using the **Write** button).

The **Status** and **Message** windows provide system communication status.

Status and Message Windows

On the lower right corner of each of the **Setup** views are two windows: **Status** and **Message**. These two windows provide ongoing indication of system status, for example, Okay, Busy, or Error. During a communication error, a message appears in the second window detailing the error.

Verify the sensor is on and the cables are connected. Perform a thorough check of the **Comm Config** and **Options › Communications** settings. (The most common communication errors are COM port selection or Timeout.) If this does not correct the problem, refer to "Communications Troubleshooting" on page 41.

System Config View

System Config view selections are grouped into four categories: System Configuration, Scan Configuration, Gain Configuration, and User Interface Options. Each category has one or more pull-down boxes of options. Settings can be changed only when the configuration type is set to **Advanced**.

Configuration Type
Determines whether the Receiver interface or the configuration software controls the sensing parameters.

DIP Switch
Receiver interface is in control (default).

Advanced
Configuration software is in control. Select **Advanced** to override the receiver DIP switch settings and access configuration settings. (Settings can not be changed unless **Advanced** is selected.)

Status
The Status and Message windows at the lower right provide indication of overall status or communication errors.

© Banner Engineering Corp. All rights reserved.
www.bannerengineering.com

DIP switch configuration screen

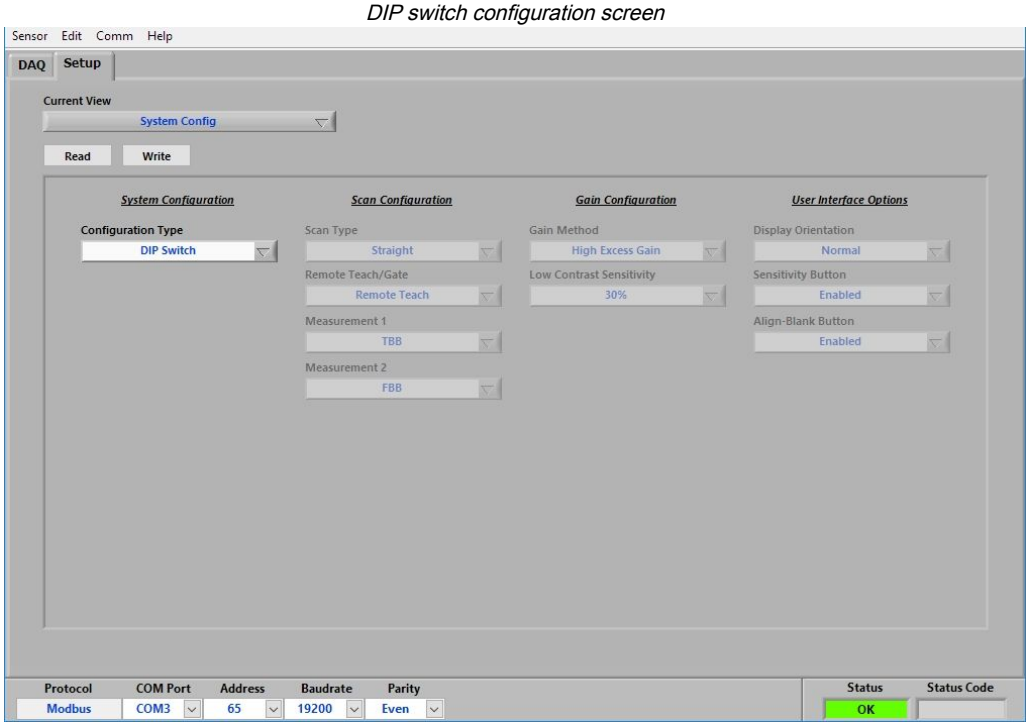

Scan Configuration

Scan Type—Choose between Straight (default), Single Edge, or Double Edge Step 1, 2, 4, 8, 16, or 32, or Carpet Nap. See "Scanning Method" on page 28 for descriptions and scan rates for these scan types. Carpet Nap can be selected only via the advanced configuration and has its own set of parameter options that will appear if it is selected.

Remote Teach/Gate—This field defines the functionality of the receiver's gray wire (see "Receiver Gray (Remote Teach) Wire" on page 22).

Measurement 1 and Measurement 2—These pull-down boxes each select a measurement mode. The measurement mode values will be mapped individually to the analog and/or discrete outputs. The sensor will apply the blocked and clear optical channel status data from each scan to the selected measurement mode(s) to calculate the measurement mode value(s). See "Measurement Mode Selection" on page 24.

Gain Configuration

This section is used to define the sensing sensitivity parameters (see "Gain Configuration" on page 23). When the **Configuration Type** is set to Advanced, the window remains yellow until the configuration is saved (using the **Write** button) and all options are available.

Gain Method

Low-Contrast or High-Excess-Gain (default) operation.

Low-Contrast Sensitivity

Is selectable (via the configuration software only), from 15 percent to 50 percent on standard models and from 3 percent to 20 percent on short-range, low-contrast models when Low-Contrast operation is selected.

A 15 percent threshold is used for target objects that attenuate the sensing beam light only slightly. The default low-contrast setting is 30% on standard models and 7% on short-range, low-contrast models.

User Interface Options

The user interface options control the Receiver user interface display and push buttons.

Display Orientation (Normal (default) or Inverted) inverts the display when sensors are mounted upside down. Note that the periods on the three seven-segment indicators do not move when the display is inverted.

Sensitivity Button (Enabled (default) or Disabled) enables or disables the Sensitivity button for security.

Align-Blank Button (Enabled (default) or Disabled) enables or disables the Alignment-Blanking button for security.

© Banner Engineering Corp. All rights reserved.
www.bannerengineering.com

System configuration setup screen

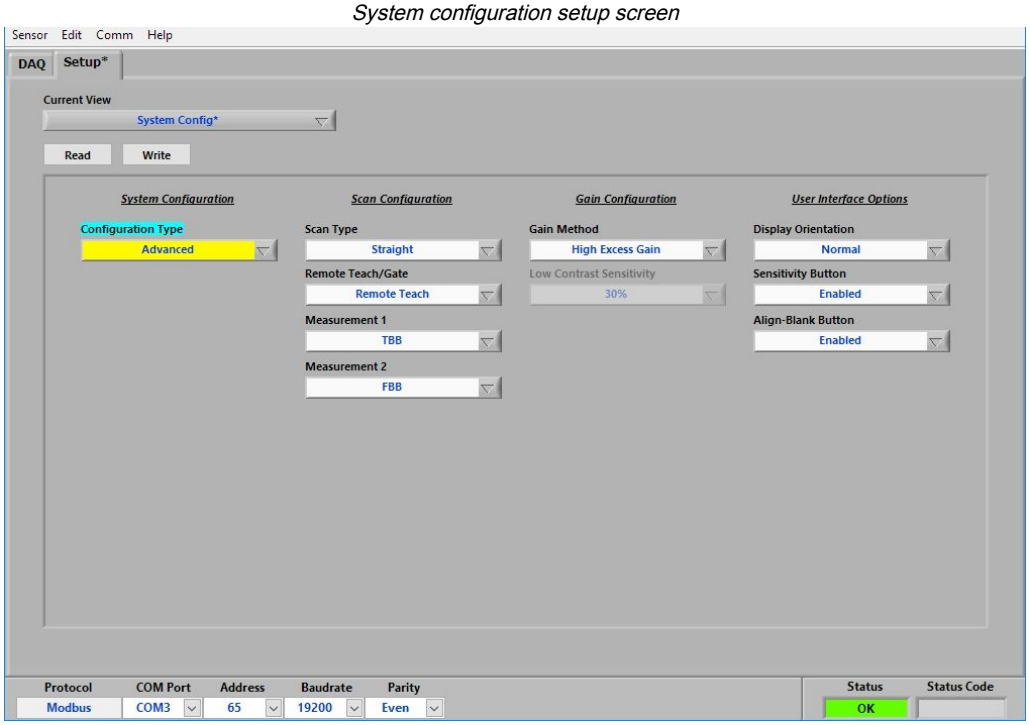

Analog Output Config View

This view is used to individually set the parameters for each of the analog outputs. Settings can be changed only when the configuration type (in the System Config view) is set to **Advanced**.

Status determines whether that output is enabled or disabled. When the analog output is disabled, the analog output will source either 0 milliamps or 0 volts.

Slope selects between positive and negative analog output slope. The slope option allows the analog output to increase as the measurement value increases, or to decrease as the measurement value increases.

Measurement assigns the desired measurement mode (Meas1 and Meas2, as configured in the System Config view) to each output. (Select a negative slope to invert an output.)

Zero Value is used to specify the analog output value when the array goes clear. The options for Zero Value are hold (output holds the last value before the light screen became clear), minimum (default) (provides the null or minimum value), or maximum (provides the span or maximum value).

Analog Filter Speed (fast (default), medium, or slow) allows averaging of the analog output response to slow, and therefore smooth, the response. The analog filter speed is defined as the number of scans necessary for a step response to reach 95% of the final value. These values are as follows:

Response Speed	95% Step Response (sensor scans)
Fast	1 scan
Medium	6 scans
Slow	24 scans

Peak Detect (disabled (default), minimum or maximum) configures the sensor to capture a minimum or maximum value and latch this analog value until a reset has occurred (see Peak Detect Reset).

Peak Detect Reset (auto (default) or external communication) specifies the method by which the analog output peak-detect is re-triggered. In Auto mode, the analog output remains latched until the sensor array goes clear and then detects another object. Select external communication to serially read the analog latch values (see Appendix A, Example A-8 for an example of peak detect reset using external communication).

© Banner Engineering Corp. All rights reserved.
www.bannerengineering.com

Null and Span values can be adjusted to vary the analog signal levels. These values are factory-calibrated to represent 0 volts (4 mA) and 10 volts (20 mA). The values represent a 12-bit number that ranges from 0 to 4095.

If reverting a configuration to the default values, first record these factory-calibrated values, so they can later be written to the sensor.

NULL Output determines the minimum analog output value (must be less than the Span value).

SPAN Output determines the maximum analog output value (must be higher than the Null value).

Discrete Output Config View

This view is used to individually set the parameters for each of the discrete outputs. Settings can be changed only when the configuration type (in the System Config view) is set to **Advanced**.

Status is used to enable (default) or disable that discrete output.

Polarity of the discrete outputs are independent and can be set to either NPN (sinking current) or PNP (sourcing current), regardless of the sensor model.

Mode selects between normally closed and normally open for each output, in effect, "inverting" the output. When Normally Closed is selected, the output conducts when the sensor scan value is outside of the selected limits. When Normally Open is selected, the output conducts when the sensor scan value is within the selected limits. If discrete output 2 Type is selected for Alarm/Health Status, the options in the Mode field become Health or Alarm; see **Type** below.

Measurement ties the discrete output to one of the two selected measurement modes (Meas1 or Meas2, as configured in the System Config view).

Type (discrete output 2 only) selects between measurement or alarm functions. (Output 1 always is tied to a measurement mode.) If Alarm/Health Status is selected, Output 2 will change state whenever the System detects a sensor error (such as a disconnected cable) or whenever the excess gain of one or more beams becomes marginal, as follows:

- Health: Output is normally active, becomes inactive when an error occurs.
- Alarm: Output is normally inactive, becomes active when an error occurs.

Demodulation is used to smooth the discrete output response. Each discrete output can respond after each sensor scan, or the response time can be increased by increasing the demodulation. Increasing the demodulation increases the required number of consecutive qualifying scans (that have a measurement mode value within the prescribed window and hysteresis values) to change the discrete output state. The maximum demodulation value is 250 scans and is selected independently for each output.

Threshold Low and Threshold High Values are used to "window" the measurement values that control a discrete output. The values each identify a beam in the array (beam 1 being closest to the sensor display). At each scan, the sensor processes the status of the optical channels and determines values for the selected measurement modes. For the Discrete Output analysis, the measurement values are compared to the low and high thresholds. If the selected measurement value is between the low and high threshold values (including the low and high limit), then the sensor will register a valid condition. After the specified number of consecutive scan response values (see **Demodulation**), the sensor recognizes that the conditions specifying the discrete output are met and the output changes state.

Hysteresis prevents unstable output conditions when the scan analysis value exactly matches the threshold.

- Hysteresis Low value determines the amount of change that must occur beyond the low threshold to cause that output to change state. The default Hysteresis Low setting is one beam less than the Threshold Low setting.
- Hysteresis High value determines the amount of change that must occur beyond the high threshold to cause that output to change state. The default Hysteresis High setting is one beam more than the Threshold High setting.

Comm Config View

This view is used to define the serial communication parameters that the sensor uses for communication with the GUI or the process controller. If any changes are made to fields in this view, update the fields accordingly in **Options › Communication Settings** (Ctrl + M) to enable further communication.

Address determines the sensor location (from 1 to 247; default is 65) on the process controller network. Adjust by highlighting the existing number and overtype a new value, or use the up/down arrows to the left of the field. If a new sensor address is selected, update the GUI address via **Options › Communication Settings** (Ctrl + M) to enable further communication.

© Banner Engineering Corp. All rights reserved.

Parity: Select Odd, Even (default), or None.

Baud Rate is the data communication rate between the sensor and the computer used for configuration or the process controller. Choose from three values: 9600, 19200 (default), and 38400.

Modbus Timeout can be used to relax communication timing. The Modbus standard (Compliant setting) defines spacing between words within a message to be no longer than the time required to transmit 1.5 bytes of information. However, the time between successive bytes within a serial message can be extended (Extended setting; default) to allow communication with a slower device.

Part Number and Version Info View

This view provides basic read-only reference information about the connected emitter and receiver. Information includes the receiver part number, firmware version numbers, and hardware date codes.

System Diagnostics View

This view provides read-only information about the connected emitter and receiver, for diagnostic purposes. This information may be useful if factory-assisted troubleshooting is required. Refer to "Error Codes" on page 67 for possible error codes and corrective action.

Channel Status displays the number of emitter and receiver channels (which should be identical), the location of the first bad emitter channel, if any, and the level of optical power being delivered by the emitter.

Operational Status displays the overall Error Code (or System Status), plus the status of each receiver DIP switch position, regardless of whether they are enabled.

Output Status displays the status of each output individually.

Service Status displays the sensor time of service, updated every two hours.

Communications Troubleshooting

The two most common communication errors are listed in the table below. For other errors, contact the factory.

Error Code	Error Message	Description	Corrective Action
6101	Modbus Timeout	Timeout reached while communicating with the sensor	1. Check sensor power. 2. Check communication cable connections. 3. Check Communication Settings in GUI. 4. Use Advanced Communication Settings to ping/ discover the sensor.
-1073807343	VISA: Insufficient location...	The selected COM port does not exist on the PC	1. Verify the COM port number on PC. 2. Choose the correct COM port in the Communication Settings screen.

© Banner Engineering Corp. All rights reserved.
www.bannerengineering.com

Menu Structure

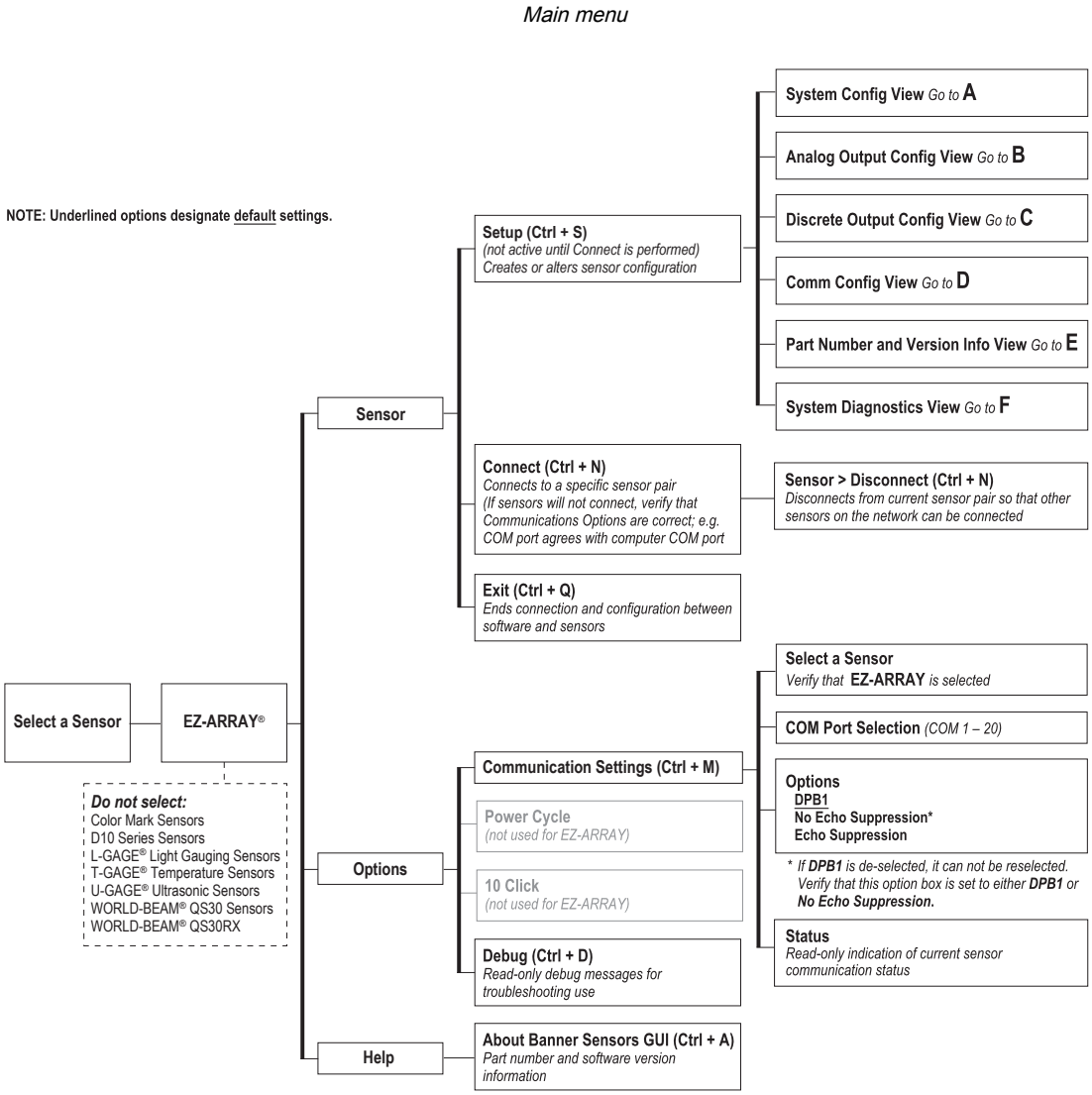

© Banner Engineering Corp. All rights reserved.
www.bannerengineering.com

System Configuration menu

A **Sensor > Setup (Ctrl + S) > System Config View***
(Not available until Connect is performed)

NOTE: Underlined options designate default settings.

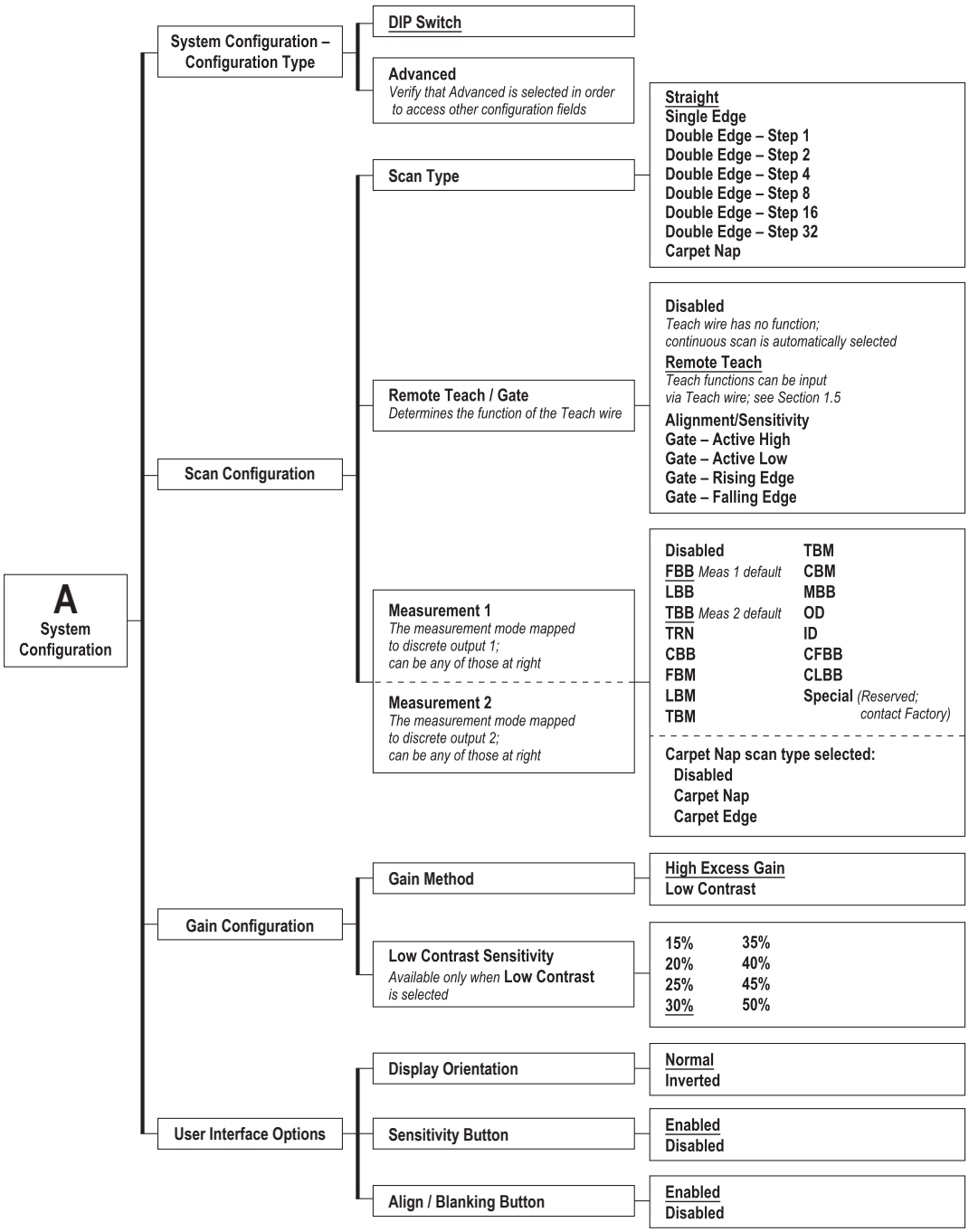

* Use drop-down arrow at right-hand side of the **Current View** field to quickly move to another view.

© Banner Engineering Corp. All rights reserved.
www.bannerengineering.com

Analog output menu

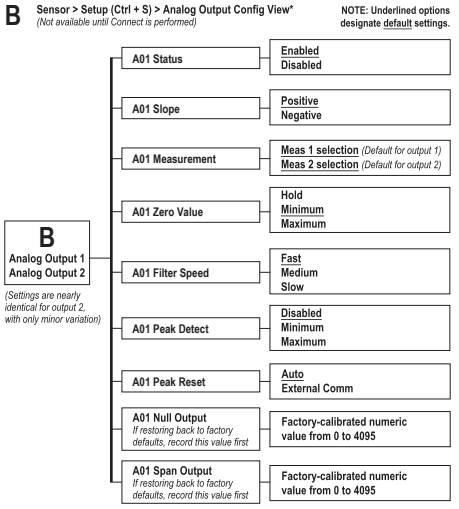

* Use drop-down arrow at right-hand side of the **Current View** field to quickly move to another view.

Comm configuration menu

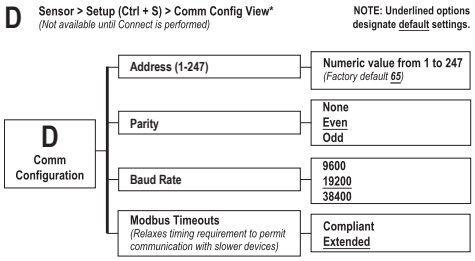

* Use drop-down arrow at right-hand side of the **Current View** field to quickly move to another view.

Discrete output menu

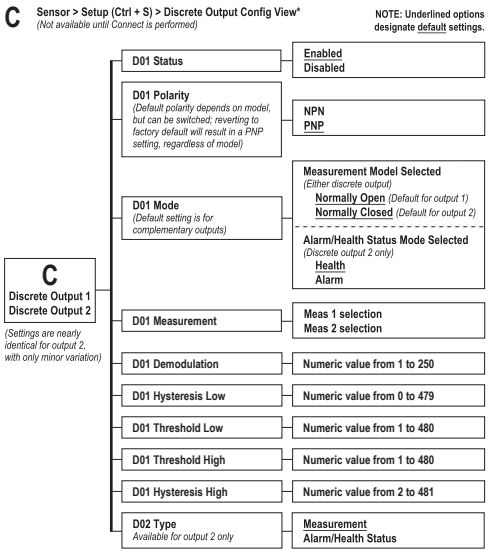

* Use drop-down arrow at right-hand side of the **Current View** field to quickly move to another view.

System information menu

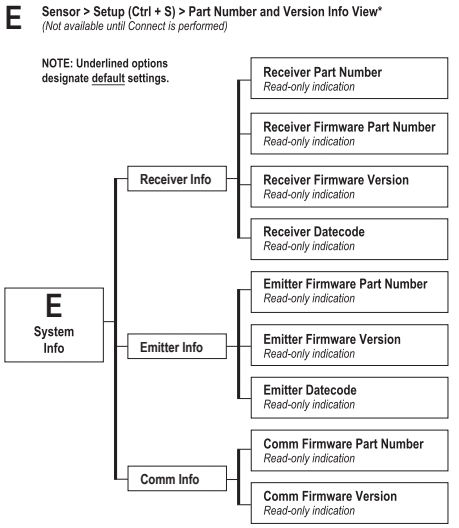

* Use drop-down arrow at right-hand side of the **Current View** field to quickly move to another view.

© Banner Engineering Corp. All rights reserved.
www.bannerengineering.com

Diagnostics menu

F **Sensor > Setup (Ctrl + S) > System Diagnostics View***
(Not available until Connect is performed)

NOTE: Underlined options designate default settings.

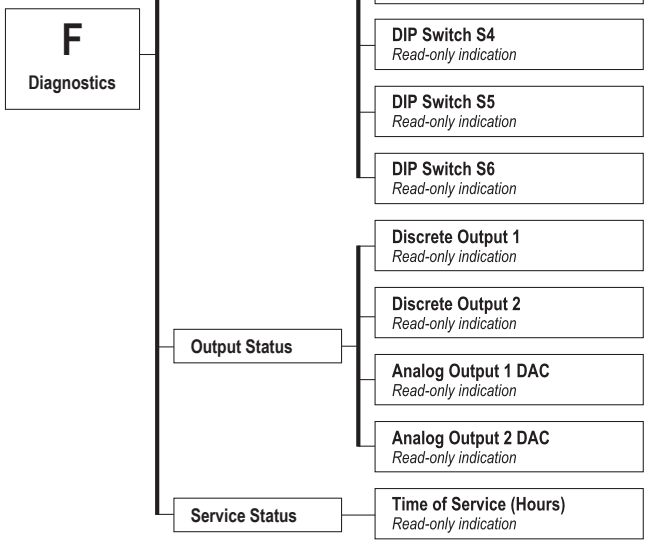

* Use drop-down arrow at right-hand side of the **Current View** field to quickly move to another view.

© Banner Engineering Corp. All rights reserved.
www.bannerengineering.com

Chapter Contents

Cordsets and Connections 46
Alignment Aids 48
Accessory Mounting Brackets and Stands 48
MSA Series Stands 48

Chapter 5 Accessories

Cordsets and Connections

8-Pin Single-Ended M12 Female Shielded Cordsets					
Model	**Length**	**Style**	**Dimensions**	**Pinout (Female)**	
MAQDC-806	2 m (6.56 ft)	Straight	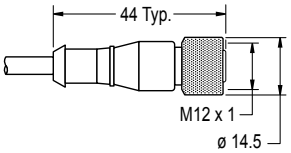	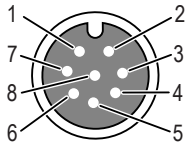	
MAQDC-815	5 m (16.4 ft)				
MAQDC-830	10 m (32.81 ft)				
MAQDC-850	15 m (49.21 ft)			1 = White 2 = Brown 3 = Green 4 = Yellow	5 = Gray 6 = Pink 7 = Blue 8 = Red

8-Pin M12 Female Branch to Male Trunk Flat Junction Splitter Cordsets			
Model	**Trunk (Male)**	**Branches (Female)**	**Pinout**
CSB-M1280M1280	No trunk	No branches	Male 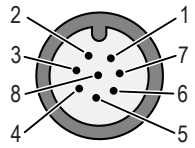 Female 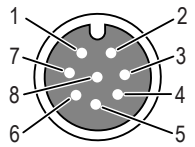 1 = Brown 2 = Or/Bk 3 = Orange 4 = White 5 = Black 6 = Blue 7 = Gn/Ye 8 = Violet
CSB-M1281M1281	0.3 m (1 ft)	2 x 0.3 m (1 ft)	
CSB-M1288M1281	2.44 m (8 ft)		
CSB-M12815M1281	4.57 m (15 ft)		
CSB-M12825M1281	7.62 m (25 ft)		
CSB-UNT825M1281	7.62 m (25 ft) Unterminated		
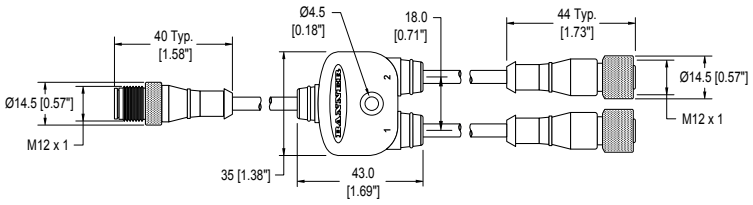			

Communication Connections			
Model	**Description**	**Image**	**Pinout**
Communications Cables			

Continued on page 47

© Banner Engineering Corp. All rights reserved.
www.bannerengineering.com

Continued from page 46

Communication Connections				
Model	**Description**		**Image**	**Pinout**
MQDMC-506	Straight male connector, 5-pin M12	2 m (6.5 ft) long	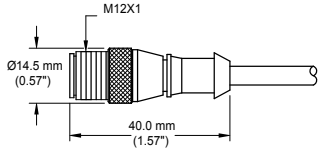	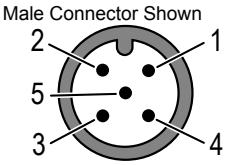
MQDMC-515		5 m (15 ft) long		
MQDMC-530		9 m (30 ft) long		
MQDMC-506RA	Right-angle male connector, 5-pin M12	2 m (6.5 ft) long	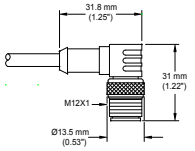	
MQDMC-515RA		5 m (15 ft) long		
MQDMC-530RA		9 m (30 ft) long		
4-Pin Threaded M12/M12 Cordsets - Double Ended				
MQDEC-403SS	Male Straight / Female Straight	0.9 m	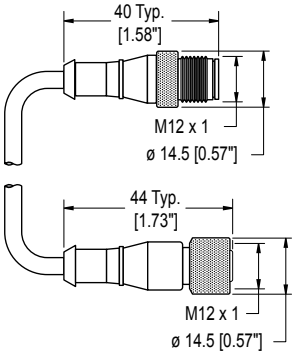	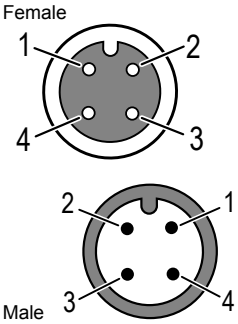
MQDEC-406SS		1.8 m		
MQDEC-412SS		3.6 m		
MQDEC-420SS		6.1 m		
MQDEC-430SS		9.2 m		
MQDEC-450SS		15.2 m		
MQDEC-403RS	Male Right-Angle / Female Straight	0.9 m	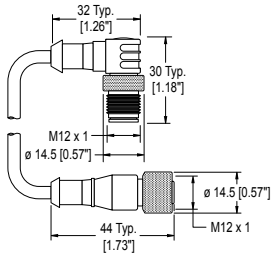	
MQDEC-406RS		1.8 m		
MQDEC-412RS		3.6 m		
MQDEC-420RS		6.1 m		
MQDEC-430RS		9.2 m		
MQDEC-450RS		15.2 m		
USB Serial Adapter			**Dimensions**	
INTUSB485-1	MODBUS 485-RTU model	For connection of 5-pin communications cable to computer USB port	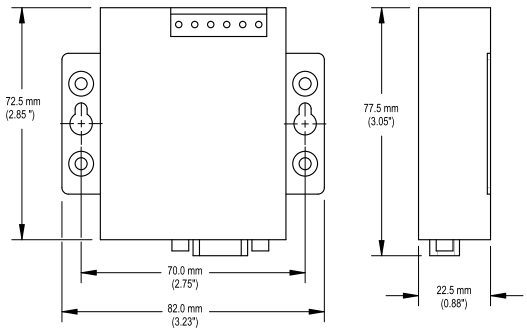	
EZA-USB485-01				

© Banner Engineering Corp. All rights reserved.
www.bannerengineering.com

Alignment Aids

Model	Description
LAT-1-SS	Self-contained visible-beam laser tool for aligning any EZ-ARRAY emitter/receiver pair. Includes retroreflective target material and mounting clip.
EZA-LAT-SS	Replacement adaptor (clip) hardware for EZ-ARRAY models
EZA-LAT-2	Clip-on retroreflective LAT target
BRT-THG-2-100	2-inch retroreflective tape, 100 ft
BT-1	Beam Tracker

Accessory Mounting Brackets and Stands

EZA-MBK-20

- Adapter brackets for mounting to engineered/slotted aluminum framing such as 80/20™ and Unistrut™. Angled slots allow mounting to 20 mm to 40 mm dual channel and center slot. allows mounting to single-channel framing
- Retrofit for Banner MINI-SCREEN
- Order **EZA-MBK-20U** for bracket with M5 and M6 mounting hardware
- CAD Files: DXF, PDF, IGS, STP

Hole size: A = ø7 × 25 (2); B = ø7 × 18; C = ø21.5; D = ø4.8 × 10.2;

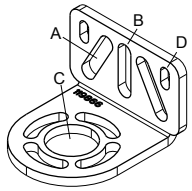

See "Replacement Parts" on page 68 for standard brackets. Order one EZA-MBK-20 bracket per sensor, two per pair.

NOTE: Standard brackets shipped with sensors connect directly to MSA series stand, using hardware included with the stands.

MSA Series Stands

- Provides mounting T-slots with 20 mm dimension between slots
- Base included. Available without a base by adding the suffix **NB** to the model number (for example, **MSA-S42-1NB**)

Stand Model	Pole Height	Useable Stand Height	Overall Stand Height	
MSA-S24-1	610 mm (24 in)	483 mm (19 in)	616 mm (24.25 in)	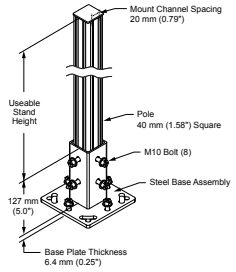
MSA-S42-1	1065 mm (42 in)	938 mm (37 in)	1071 mm (42.2 in)	
MSA-S66-1	1676 mm (66 in)	1549 mm (61 in)	1682 mm (66.25 in)	
MSA-S84-1	2134 mm (84 in)	2007 mm (79 in)	2140 mm (84.25 in)	
MSA-S105-1	2667 mm (105 in)	2540 mm (100 in)	2673 mm (105.25 in)	

© Banner Engineering Corp. All rights reserved.
www.bannerengineering.com

Chapter Contents

Modbus Overview 49
Configuration Data 52
System Status and Measurement Data 59

Chapter 6 Additional Information

Modbus Overview

For the latest Modbus protocol and specifications, please visit the website at http://www.modbus.org.

Modbus is a Master-Slave architecture. A master-slave system has one master that sends explicit commands to a slave on a network. The EZ-Array is compliant with Modbus v1.1a and follows the MODBUS RTU format. The RTU message Frame is depicted below:

Slave Address	Function Code	Data	Cyclic Redundancy Check (CRC)
1 byte	1 byte	0 up to 252 byte(s) (High byte, Low byte)	2 bytes (CRC Low, CRC High)

The slave address can be assigned a value in the range 1-247. Three function codes are supported:

- (0x03) Read Holding Registers
- (0x04) Read Input Registers
- (0x10) Write Multiple Holding Registers

The data in the registers is transmitted in big-endian order (HIGH byte, LOW byte).

Read Holding Registers (0x03)

Use this function code to read the contents of a contiguous block of EZ-ARRAY holding registers. The command specifies the starting address and the number of registers to read.

The EZ-ARRAY employs a direct addressing scheme. For example, the holding register at address 40001 is accessed by reading address 40001 (0x9C41) directly (the starting address is not an offset). The register data in the response message are packed as two bytes per register. For each register, the data is returned in a big-endian order (HIGH byte, LOW byte).

Request		
Function Code	1 byte	0x03
Starting Address	2 bytes	0x0000 to 0xFFFF
Quantity of Holding Registers	2 bytes	0x0001 to 0x007D

Response		
Function Code	1 byte	0x03
Byte Count	1 byte	2 × N (where N is the number of holding registers)
Holding Registers	N × 2 bytes	

Error		
Error Code	1 byte	0x83
Exception Code	1 byte	1 to 4

© Banner Engineering Corp. All rights reserved.
www.bannerengineering.com

Example: Reading holding registers

Request		Response	
Field Name	**(Hex)**	**Field Name**	**(Hex)**
Slave Address	41	Slave Address	41
Function	03	Function	03
Starting Address (HIGH byte)	9C	Byte Count	06
Starting Address (LOW byte)	41	Register 40001 (HIGH byte)	02
Quantity of Registers (HIGH byte)	00	Register 40001 (LOW byte)	2B
Quantity of Registers (LOW byte)	03	Register 40002 (HIGH byte)	00
CRC (LOW byte)	75	Register 40002 (LOW byte)	00
CRC (HIGH byte)	4F	Register 40003 (HIGH byte)	00
		Register 40003 (LOW byte)	64
		CRC (LOW byte)	34
		CRC (HIGH byte)	B9

The contents of addresses 40001, 40002, and 40003 are the two-byte values 0x022B (555 decimal), 0x0000 (0 decimal), and 0x0064 (100 decimal), respectively.

Read Input Register (0x04)

Use this function code to read from 1 to 125 contiguous EZ-ARRAY input registers. The command specifies the starting address and the number of registers.

The EZ-ARRAY employs a direct addressing scheme. For example, the input register at address 30001 is accessed by reading address 30001 (0x7531) directly (the starting address is not an offset). The register data in the response message are packed as two bytes per register. For each register, the data is returned in big-endian order (HIGH byte, LOW byte).

Request		
Function Code	1 byte	0x04
Starting Address	2 bytes	0x0000 to 0xFFFF
Quantity of Input Registers	2 bytes	0x0001 to 0x007D

Response		
Function Code	1 byte	0x04
Byte Count	1 byte	2 × N (where N is the number of registers
Input Registers	N × 2 bytes	

Error		
Error Code	1 byte	0x84
Exception Code	1 byte	1 to 4

Example: Reading input registers

Request		Response	
Field Name	**(Hex)**	**Field Name**	**(Hex)**
Slave Address	41	Slave Address	41
Function	04	Function	04
Starting Address (HIGH byte)	75	Byte Count	02
Starting Address (LOW byte)	31	Register 8 (HIGH Byte)	00
Quantity of Registers (HIGH byte)	00	Register 8 (LOW byte)	0A

Continued on page 51

© Banner Engineering Corp. All rights reserved.
www.bannerengineering.com

Continued from page 50

Request		Response	
Field Name	(Hex)	Field Name	(Hex)
Quantity of Registers (LOW byte)	01	CRC (LOW byte)	38
CRC (LOW byte)	74	CRC (HIGH byte)	F8
CRC (HIGH byte)	C9		

The contents of address 30001 are shown as the two-byte values of 0x000A (10 decimal).

Write Multiple Holding Registers (0x10)

Use this function code to write a block of contiguous registers into the EZ-ARRAY. The requested written values are specified in the request data field. The EZ-ARRAY employs a direct addressing scheme.

For example, the holding register at address 40001 is accessed by writing address 40001 (0x9C41) directly (i.e. the starting address is not an offset). Data is packed as two bytes per register. For each register, the data is sent in big-endian order (HIGH byte, LOW byte). The normal response returns the function code, starting address, and quantity of registers written.

Request		
Function Code	1 byte	0x10
Starting Address	2 bytes	0x0000 to 0xFFFF
Quantity of Holding Registers	2 bytes	0x0001 to 0x007B
Byte Count	1 byte	2 × N (where N is the number of holding registers)
Register Value		

Response		
Function Code	1 byte	0x03
Starting Address	2 bytes	0x0000 to 0xFFFF
Holding Registers	N × 2 bytes	1 to 0x7B

Error		
Error Code	1 byte	0x90
Exception Code	1 byte	1 to 4

Example: Write holding registers

Request		Response	
Field Name	(Hex)	Field Name	(Hex)
Slave Address	41	Slave Address	41
Function	10	Function	10
Starting Address (HIGH byte)	9C	Starting Address (HIGH Byte)	9C
Starting Address (LOW byte)	41	Starting Address (LOW Byte)	41
Quantity of Registers (HIGH byte)	00	Quantity of Registers (HIGH Byte)	00
Quantity of Registers (LOW byte)	02	Quantity of Registers (LOW Byte)	02
Byte Count	04	CRC (LOW Byte)	31
Register 1 (HIGH Byte)	00	CRC (HIGH Byte)	4C
Register 1 (LOW Byte)	01		
Register 2 (HIGH Byte)	0A		

Continued on page 52

© Banner Engineering Corp. All rights reserved.
www.bannerengineering.com

Continued from page 51

Request		Response	
Field Name	(Hex)	Field Name	(Hex)
Register 2 (LOW Byte)	02		
CRC (LOW Byte)	3A		
CRC (HIGH Byte)	C7		

The holding registers at addresses 40001 and 40002 were written to the two byte values of 0x000A (10 decimal) and 0x0102 (258 decimal), respectively.

Configuration Data

MODBUS models of the EZ-ARRAY use the Holding Registers table for providing read-write access to configuration data. The Holding Registers are defined in the 40000–49999 address range. The Input Registers table is used for providing read-only access to system status and measurement data. The Input Registers are defined in the 30000–39999 address range.

Scan Configuration

The *Scan Configuration* contains the settings for the scan type and receiver's remote teach wire (gray wire) function.

Modbus		MASK	Member Name
Holding Register Address	Modicon		
40000	N/A	LOW BYTE	Scan Type*
40000	N/A	HIGH BYTE	Remote Teach/Gate*
40001	0	LOW BYTE	Scan Type
40001	0	HIGH BYTE	Remote Teach/Gate

*Deprecated

Scan Type

Value	Type	Description
1	Straight	Straight Scanning
2	Single Edge	Scanning for Single Edge
3	Double Edge - Step 1	Scanning for Edges of up to 3 objects (fires every channel)
4	Double Edge - Step 2	Scanning for Edges of up to 3 objects (fires channels 1, 3, 5, ...)
5	Double Edge - Step 4	Scanning for Edges of up to 3 objects (fires channels 1, 5, 9, ...)
6	Double Edge - Step 8	Scanning for Edges of up to 3 objects (fires channels 1, 9, 17, ...)
7	Double Edge - Step 16	Scanning for Edges of up to 3 objects (fires channels 1, 17, 33, ...)
8	Double Edge - Step 32	Scanning for Edges of up to 3 objects (fires channels 1, 33, 65, ...)
10	Carpet Nap	Scanning for Carpet Nap Detection Applications

Remote TEACH/Gate

Value	Function	Description
0	Disabled	Disabled
1	Remote Teach	Enabled with All Functionality
2	Alignment/Sensitivity	Only Alignment, Blanking, and Sensitivity Adjustments can be performed
3	Gate - Active High	Setting the gray wire in the high state enables scanning
4	Gate - Active Low	Setting the gray wire in the low state enables scanning

Continued on page 53

© Banner Engineering Corp. All rights reserved.
www.bannerengineering.com

Continued from page 52

Value	Function	Description
5	Gate - Rising Edge	A single scan will occur after the gray wire goes from a low-to-high state
6	Gate - Falling Edge	A single scan will occur after the gray wire goes from a high-to-low state

Blanking Configuration

The *Blanking Configuration* contains the blanking bit-mask for the EZ-ARRAY's channels. Each register represents 16 channels.

Blanking Configuration (150, 300, 450, 600, 900, 1200, 1500, 1800 Length Models)

Modbus		MASK	Member Name
Holding Register Address	Modicon Control Register		
40003	2	LOW BYTE	Blanking 1-8
40003	2	HIGH BYTE	Blanking 9-16
...	...	...	...
40025	24	LOW BYTE	Blanking 353-360
40025	24	HIGH BYTE	(pad byte)

Blanking Configuration (2100, 2400 Length Models)

Modbus		MASK	Member Name
Holding Register Address	Modicon Control Register		
40250	249	LOW BYTE	Blanking 1-8
40250	249	HIGH BYTE	Blanking 9-16
...	...	...	...
40279	278	LOW BYTE	Blanking 465-472
40279	278	HIGH BYTE	Blanking 473-480

Blanking bit-mask

Value	Status	Description
0	Non-Blanked	The channel will be used during scanning
1	Blanked	The channel will be skipped during scanning

Example - Writing Blanking Configuration to Blank the First Two Channels

Request		Response	
Field Name	(Hex)	Field Name	(Hex)
Slave Address	41	Slave Address	41
Function	10	Function	10
Starting Address (HIGH Byte)	9C	Starting Address (HIGH Byte)	9C
Starting Address (LOW Byte)	43	Starting Address (LOW Byte)	43
Quantity of Registers (HIGH Byte)	00	Quantity of Registers (HIGH Byte)	00
Quantity of Registers (LOW Byte)	17	Quantity of Registers (LOW Byte)	17
Quantity of Bytes	2E	CRC (LOW Byte)	51
Register 40003 (HIGH Byte)	00	CRC (HIGH Byte)	43
Register 40003 (LOW Byte)	03		

Continued on page 54

© Banner Engineering Corp. All rights reserved.
www.bannerengineering.com

Continued from page 53

Request		Response	
Field Name	(Hex)	Field Name	(Hex)
Register 40004 (HIGH Byte)	00		
Register 40004 (LOW Byte)	00		
...	...		
Register 40025 (HIGH Byte)	00		
Register 40025(LOW Byte)	00		
CRC (LOW Byte)	3A		
CRC (HIGH Byte)	96		

To Blank the first 2 channels, the Blanking 1-16 register (address 40003) is set to the two-byte value of 0x0003 (3 decimal).

General Configuration

The *General Configuration* contains the general settings for the EZ-ARRAY.

Modbus		MASK	Member Name
Holding Register Address	Modicon Holding Register		
40046	45	LOW BYTE	Emitter Power
40046	45	HIGH BYTE	Gain Method
40047	46	LOW BYTE	Low Contrast Sensitivity
40047	46	HIGH BYTE	HW Interface Flags
40048	47	LOW BYTE	Measurement 1
40048	47	HIGH BYTE	Measurement 2
40049	48		RESERVED
40050	49		Number of Dirty Channels
40051	50	LOW WORD	Time of Service
40052	51	HIGH WORD	

Emitter Power

Value	Function	Description
1	Level 1	Power Setting 1 (Lowest)
2	Level 2	Power Setting 2
3	Level 3	Power Setting 3
4	Level 4	Power Setting 4
5	Level 5	Power Setting 5
6	Level 6	Power Setting 6
7	Level 7	Power Setting 7
8	Level 8	Power Setting 8
9	Level 9	Power Setting 9
10	Level 10	Power Setting 10
11	Level 11	Power Setting 11 (Highest)

Gain Method

Value	Status	Description
1	High-Excess Gain	Fixed thresholds for maximum excess gain

Continued on page 55

© Banner Engineering Corp. All rights reserved.

Continued from page 54

Value	Status	Description
2	Low Contrast	Adjustable percentage-based thresholds (only in Straight Scan)

Low Contrast Sensitivity

Value	Standard	Short Range, Low Contrast	Description
0	10%	0%	Blocked threshold is set the designated % below the aligned signal
1	15%	3%	
2	20%	5.5%	
3	25%	6%	
4	30%	7%	
5	35%	10%	
6	40%	12%	
7	45%	15%	
8	50%	20%	

HW Interface Flags

SPDU Sub-Index	Bit Position	Flag	Description
4	0	Display Orientation	0 = Normal, 1 = Inverted
5	1	Configuration Type	0 = DIP Switch, 1 = Advanced Control
6	2	Sensitivity Button	0 = Enabled, 1 = Disabled
7	3	Align/Blank Button	0 = Enabled, 1 = Disabled

Measurement 1 & Measurement 2

Value	Function	Description
0	Disabled	Disabled
1	FBB	First Beam Blocked
2	LBB	Last Beam Blocked
3	TBB	Total Beams Blocked
4	TRN	Transitions
5	CBB	Contiguous Beams Blocked
6	FBM	First Beam Made
7	LBM	Last Beam Made
8	TBM	Total Beams Made
9	CBM	Contiguous Beams Made
10	MBB	Middle Beam Blocked
11	OD	Outer Diameter
12	ID	Inner Diameter
13	CFBB	Contiguous First Beam Blocked
14	CLBB	Contiguous Last Beam Blocked
15	O1 FBB	Object 1 First Beam Blocked
16	O1 LBB	Object 1 Last Beam Blocked
17	O2 FBB	Object 2 First Beam Blocked
18	O2 LBB	Object 2 Last Beam Blocked

Continued on page 56

© Banner Engineering Corp. All rights reserved.
www.bannerengineering.com

Continued from page 55

Value	Function	Description
19	O3 FBB	Object 3 First Beam Blocked
20	O3 LBB	Object 3 Last Beam Blocked
21	CARPET NAP	Carpet Nap
24	CARPET EDGE	Carpet Edge

Number of Dirty Channels

Range	Description
1-360	Number of channels that need to be dirty before the indicator is lit (150 to 1800 mm Length Models)
1-480	Number of channels that need to be dirty before the indicator is lit (2100 to 2400 mm Length Models)

Time of Service

Range	Description
$2^{32} - 1$	Number of hours EZ-ARRAY has been in operation

Modbus Communications Configuration

The Communications Configuration contains the settings for the Modbus/RS-485 communications. This configuration data does not apply to IO-Link models.

Modbus		MASK	Member Name
Holding Register Address	Modicon Holding Register		
41000	999	LOW BYTE	Address
41000	999	HIGH BYTE	Parity
41001	1000	LOW BYTE	Baud Rate
41001	1000	HIGH BYTE	MODBUS Timeout
41002	1001	LOW BYTE	Cache Mode
41002	1001	HIGH BYTE	Stick Size

Modbus Address

Range	Description
1–247	MODBUS address for EZ-Array

Parity

Value	Type	Description
0	Even	Even parity bit is used
1	Odd	Odd parity bit is used
2	None	No parity is used (stop bits MUST be set to 2)

Baud Rate

Value	Baud Rate	Description
0	19200	EZ-Array communicates at 19.2 Kb/s
1	9600	EZ-Array communicates at 9.6 Kb/s
2	38400	EZ-Array communicates at 38.4 Kb/s
3	57600	EZ-Array communicates at 57.6 Kb/s

Continued on page 57

© Banner Engineering Corp. All rights reserved.
www.bannerengineering.com

Continued from page 56

Value	Baud Rate	Description
4	115200	EZ-Array communicates at 115.2 Kb/s

Modbus Timeouts

Value	Type	Description
0	Compliant	EZ-Array adheres to strict MODBUS timing
1	Extended	EZ-Array relaxes PC timing to 2x the MODBUS timing specifications

Cache Mode

Value	Type	Description
0	Standard	Active measurements are cached
1	Extended	Active measurements and channel states are cached (decreases MAX scan rate)

Analog Output 1 Configuration

The *Analog Output 1 Configuration* contains the settings for the first analog output.

Modbus		MASK	Member Name
Holding Register Address	Modicon Holding Register		
40026	25	LOW BYTE	Config Flags
40026	25	HIGH BYTE	RESERVED
40027	26	LOW BYTE	Filter Speed
40027	26	HIGH BYTE	RESERVED
40028	27		NULL Output
40029	28		SPAN Output

Config Flags (Analog Output 1 & 2)

SPDU Sub-Index	Bit Position	Flag	Description
1	0	Slope	0 = Negative, 1 = Positive
2	1	Measurement	0 = Measurement 2, 1 = Measurement 1
3	2-3	ZERO Value	0 = Hold, 1 = Minimum, 2 = Maximum
4	4	Peak Detect	0 = Disabled, 1 = Enabled
5	5	Peak Detect Direction	0 = Maximum, 1 = Minimum
6	6	Status	0 = Disabled, 1 = Enabled
7	7	Peak Detect Reset	0 = Auto, 1 = External Communications

Filter Speed (Analog Output 1 & 2)

Value	Filter Speed	Description
0	Fast	No filtering
1	Medium	Filter step response is 6 scans for 98% of the signal
3	Slow	Filter step response is 24 scans for 98% of the signal

© Banner Engineering Corp. All rights reserved.
www.bannerengineering.com

NULL Output (Analog Output 1 & 2)

Range	Description
0–4095	Minimum DAC value of Analog Output (MUST be < SPAN Output)

SPAN Output (Analog Output 1 & 2)

Range	Description
0–4095	Maximum DAC value of Analog Output (MUST be > NULL Output)

Analog Output 2 Configuration

The *Analog Output 2 Configuration* contains the settings for the second analog output.

Modbus		MASK	Member Name
Holding Register Address	Modicon Holding Register		
40030	29	LOW BYTE	Config Flags
40030	29	HIGH BYTE	RESERVED
40031	30	LOW BYTE	Filter Speed
40031	30	HIGH BYTE	RESERVED
40032	31		NULL Output
40032	32		SPAN Output

Discrete Output 1 Configuration

The *Discrete Output 1 Configuration* contains the settings for the first discrete output.

Modbus		MASK	Member Name
Holding Register Address	Modicon Holding Register		
40034	33	LOW BYTE	Config Flags
40034	33	HIGH BYTE	RESERVED
40035	34		Scan Response
40036	35		Hysteresis LOW
40037	36		Hysteresis HIGH
40038	37		Threshold LOW
40039	38		Threshold HIGH

Config Flags (Discrete Output 1 & 2)

SPDU Sub-Index	Bit Position	Flag	Description
1	0	Status	0 = Disabled, 1 = Enabled
2	1	Type	0 = Measurement, 1 = Alarm/Health (Discrete Output 1 can ONLY be of type Measurement)
3	2	Polarity[5]	0 = PNP, 1 = NPN
4	3	Mode[6]	0 = Normally Closed (Health), 1 = Normally Open (Alarm)
5	4	Measurement	0 = Measurement 2, 1 = Measurement 1

[5] IO-Link Model: Discrete Output 2 ONLY, Discrete Output 1 is PUSH-PULL
[6] For Type = Alarm/Health, Mode setting corresponds to 0=Health, 1=Alarm

© Banner Engineering Corp. All rights reserved.
www.bannerengineering.com

Scan Response (Discrete Output 1 & 2)

Range	Description
1-250	Number of consecutive measurements before changing state

Hysteresis LOW (Discrete Output 1 & 2)

Range	Description
0-359	Lower hysteresis threshold for discrete output (MUST be < Threshold LOW) (150 to 1800 mm Length Models)
0-479	Lower hysteresis threshold for discrete output (MUST be < Threshold LOW) (2100 to 2400 mm Length Models)

Hysteresis HIGH (Discrete Output 1 & 2)

Range	Description
2-361	Upper hysteresis threshold for discrete output (MUST be > Threshold HIGH) (150 to 1800 mm Length Models)
2-481	Upper hysteresis threshold for discrete output (MUST be > Threshold HIGH) (2100 to 2400 mm Length Models)

Threshold LOW (Discrete Output 1 & 2)

Range	Description
1-360	Lower threshold for discrete output (MUST be <= Threshold HIGH) (150 to 1800 mm Length Models)
1-480	Lower threshold for discrete output (MUST be <= Threshold HIGH) (2100 to 2400 mm Length Models)

Threshold HIGH (Discrete Output 1 & 2)

Range	Description
1-360	Upper threshold for discrete output (MUST be >= Threshold LOW) (150 to 1800 mm Length Models)
1-480	Upper threshold for discrete output (MUST be >= Threshold LOW) (2100 to 2400 mm Length Models)

Discrete Output 2 Configuration

The *Discrete Output 2 Configuration* contains the settings for the second discrete output.

Modbus		MASK	Member Name
Holding Register Address	Modicon Holding Register		
40040	39	LOW BYTE	Configuration
40040	39	HIGH BYTE	RESERVED
40041	40		Demodulation Count
40042	41		Hysteresis LOW
40043	42		Hysteresis HIGH
40044	43		Threshold LOW
40045	44		Threshold HIGH

System Status and Measurement Data

IO-Link models of the EZ-ARRAY use the SPDU channel to provide access to system status measurement data and the Alignment/Blanking routine.

Active Measurements

The *Active Measurements* section contains the current values of the two measurements that were configured in the *General Configuration*.

© Banner Engineering Corp. All rights reserved.
www.bannerengineering.com

Modbus		MASK	Member Name
Input Register Address	Modicon Control Register		
30001	0		Measurement 1
30002	1		Measurement 2

Measurement 1 and Measurement 2

Range	Description
0-1440	Measurements are represented in 4x channel resolution (150 to 1800 mm Length Models)
0-1920	Measurements are represented in 4x channel resolution (2100 to 2400 mm Length Models)

Example: Reading Active Measurements (MODBUS example)

Request		Response	
Field Name	(Hex)	Field Name	(Hex)
Slave Address	41	Slave Address	41
Function	04	Function	04
Starting Address (HIGH byte)	75	Byte Count	04
Starting Address (LOW byte)	31	Register 30001 (HIGH byte)	00
Quantity of Registers (HIGH byte)	00	Register 30001 (LOW byte)	20
Quantity of Registers (LOW byte)	02	Register 30002 (HIGH byte)	00
CRC (LOW byte)	34	Register 30002 (LOW byte)	90
CRC (HIGH byte)	C8	CRC (LOW byte)	BB
		CRC (HIGH byte)	E6

To read the Active Measurements, a read input registers request is sent starting at address 30001, requesting 2 registers.

ALL Measurements

The *ALL Measurements* section contains the current values of all the available measurements.

Modbus		MASK	Member Name
Input Registers	Modicon Control Register		
30500	499		FBB
30501	500		LBB
30502	501		TBB
30503	502		TRN
30504	503		CBB
30505	504		FBM
30506	505		LBM
30507	506		TBM
30508	507		CBM
30509	508		MBB
30510	509		OD
30511	510		ID
30512	511		CFBB
30513	512		CLBB
30514	513		O1 FBB

Continued on page 61

© Banner Engineering Corp. All rights reserved.
www.bannerengineering.com

Continued from page 60

Modbus		MASK	Member Name
Input Registers	Modicon Control Register		
30515	514		O1 LBB
30516	515		O2 FBB
30517	516		O2 LBB
30518	517		O3 FBB
30519	518		O3 LBB
30520	519		CARPET NAP
30521	520		AO1 PEAK
30522	521		AO2 PEAK
30523	522		CARPET EDGE
30524	523		SPECIAL

Measurements (ALL)

Range	Description
0-1440	Measurements are represented in 4x channel resolution (150 to 1800 mm Length Models)
0-1920	Measurements are represented in 4x channel resolution (2100 to 2400 mm Length Models)

Example: Reading ALL Measurements

Request		Response	
Field Name	(Hex)	Field Name	(Hex)
Slave Address	41	Slave Address	41
Function	04	Function	04
Starting Address (HIGH byte)	77	Byte Count	32
Starting Address (LOW byte)	24	Register 30500 (HIGH byte)	00
Quantity of Registers (HIGH byte)	00	Register 30500 (LOW byte)	00
Quantity of Registers (LOW byte)	19	Register 30501 (HIGH byte)	00
CRC (LOW byte)	64	Register 30501 (LOW byte)	00
CRC (HIGH byte)	BF	...	...
		...	...
		Register 30524 (HIGH byte)	00
		Register 30524 (LOW byte)	00
		CRC (LOW byte)	28
		CRC (HIGH byte)	C0

To read ALL Measurements, a read input registers request is sent starting at address 30500, and requesting 25 registers.

AO1 PEAK and AO2 PEAK Measurements

The AO1 PEAK and AO2 PEAK measurements store the minimum/maximum values of Analog Output 1 and Analog Output 2 respectively. When the EZ-ARRAY's Analog Outputs are configured to have Peak Detect = Enabled and Peak Detect Reset = External Communications, then reading these measurements will reset the Analog Output Peak Detect value. To enable this mode of operation, the Analog Output's Configuration Flags must be configured as shown in Example 1 (see Table A-22).

© Banner Engineering Corp. All rights reserved.
www.bannerengineering.com

Example 1. Analog Output Configuration Flags for Peak Detection with External Comm Reset

SPDU Sub-Index	Bit Position	Flag	Description	Value
1	0	Slope	0 = Negative, 1 = Positive	X*
2	1	Measurement	0 = Measurement 2, 1 = Measurement 1	X
3	2-3	ZERO Value	00 = Hold, 01 = Minimum, 10 = Maximum	XX
4	4	Peak Detect	0 = Disabled, 1 = Enabled	1
5	5	Peak Detect Direction	0 = Maximum, 1 = Minimum	X
6	6	Status	0 = Disabled, 1 = Enabled	1
7	7	Peak Detect Reset	0 = Auto, 1 = External Communications	1

* X denotes a don't care value

Example 2. Reading AO1 PEAK Measurement (MODBUS Example)

Request		Response	
Field Name	(Hex)	Field Name	(Hex)
Slave Address	41	Slave Address	41
Function	04	Function	04
Starting Address (HIGH byte)	77	Byte Count	02
Starting Address (LOW byte)	39	Register 30521 (HIGH byte)	00
Quantity of Registers (HIGH byte)	00	Register 30521 (LOW byte)	A0
Quantity of Registers (LOW byte)	01	CRC (LOW byte)	B8
CRC (LOW byte)	F4	CRC (HIGH byte)	87
CRC (HIGH byte)	B3		

This input register request will read the current Peak value of Analog Output 1, and will reset the value all in one action.

Channel States

The Channel States section contains the state of all the channels in the EZ-ARRAY. Each register represents 16 channels.

Modbus		MASK	Member Name
Input Register Address	Modicon Control Register		
30003	2	LOW BYTE	Channel 1-8
30003	3	HIGH BYTE	Channel 9-16
...	...	...	...
30025	24	LOW BYTE	Channel 353-360
30025	24	HIGH BYTE	(pad byte)
...	...	...	...*
30032	31	LOW BYTE	Channel 465-472*
30032	31	HIGH BYTE	Channel 473-480*

*For 2100 to 2400 mm Length Models

Channel States Bit-Mask

Value	State	Description
0	Made	The channel is made (clear)
1	Blocked	The channel is blocked

© Banner Engineering Corp. All rights reserved.
www.bannerengineering.com

For example, if the first and third beams of the EZ-ARRAY are blocked, Channel 1-8 would contain the value 0x0005.

Example: Reading ALL Channel States (MODBUS Example)

Request		Response	
Field Name	**(Hex)**	**Field Name**	**(Hex)**
Slave Address	41	Slave Address	41
Function	04	Function	04
Starting Address (HIGH byte)	75	Byte Count	3A
Starting Address (LOW byte)	33	Register 30003 (HIGH byte)	00
Quantity of Registers (HIGH byte)	00	Register 30003 (LOW byte)	00
Quantity of Registers (LOW byte)	1D	Register 30004 (HIGH byte)	00
CRC (LOW byte)	D4		00
CRC (HIGH byte)	C0	...	...
		...	...
		Register 30032 (HIGH byte)	00
		Register 30032 (LOW byte)	00
		CRC (LOW byte)	31
		CRC (HIGH byte)	42

To read ALL Channel States, a read input registers request is sent starting at address 30003, and requesting 30 registers.

In Modbus models, the channel states can be accessed after each scan, if *Cache Mode* is set to *Extended* in the *Communications Configuration*. Otherwise, the *Channel States* data can be accessed after every third scan (default). To set the EZ-ARRAY in Extended Cache Mode, the register at address 41002 must be set to a value of 1. This is a configuration register (*Communications Configuration*), so this register only needs to be set once. To exit Extended Cache mode, the register must be set to a value of 0.

Example: Writing Communications Configuration to enable Extended Cache Mode (MODBUS Example)

Request		Response	
Field Name	**(Hex)**	**Field Name**	**(Hex)**
Slave Address	41	Slave Address	41
Function	10	Function	10
Starting Address (HIGH byte)	A0	Starting Address (HIGH byte)	A0
Starting Address (LOW byte)	2A	Starting Address (LOW byte)	2A
Quantity of Registers (HIGH byte)	00	Quantity of Registers (HIGH byte)	00
Quantity of Registers (LOW byte)	01	Quantity of Registers (LOW byte)	01
Quantity of Bytes	02	CRC (LOW byte)	0C
Register 41002 (HIGH byte)	00	CRC (HIGH byte)	C1
Register 41002 (LOW byte)	01		
CRC (LOW byte)	F1		
CRC (HIGH byte)	93		

System Info and Status

The *System Info and Status* section contains the current status of the EZ-ARRAY.

© Banner Engineering Corp. All rights reserved.
www.bannerengineering.com

System Info and Status (150 to 1800 mm Length Models)

Modbus		MASK	Member Name
Input Register Address	Modicon		
30026	25		Number of Emitter Channels
30027	26		Emitter First Bad Channel
30028	27		Number of Receiver Channels
30029	28		ADC Value
30030	29	LOW BYTE	DIP Switch
30030	29	HIGH BYTE	ERROR Code
30031	30	LOW BYTE	Alignment Status
30031	30	HIGH BYTE	Discrete Outputs
30032	31		Analog Output 1 DAC
30033	32		Analog Output 2 DAC
30034	33		Emitter Status

System Info and Status (2100 to 2400 mm Length Models)

Modbus		MASK	Member Name
Input Register Address	Modicon Control Register		
30250	249		Number of Emitter Channels
30251	250		Emitter First Bad Channel
30252	251		Number of Receiver Channels
30253	252		ADC Value
30254	253	LOW BYTE	DIP Switch
30254	253	HIGH BYTE	ERROR Code
30255	254	LOW BYTE	Alignment Status
30255	254	HIGH BYTE	Discrete Outputs
30256	255		Analog Output 1 DAC
30257	256		Analog Output 2 DAC
30258	257		Emitter Status

Number of Emitter Channels

Range	Description
30-480	Number of channels the emitter has (multiples of 30)

Emitter First Bad Channel

Range	Description
0-480	First channel that emitter is unable to fire (0 = no bad channels)

Number of Receiver Channels

Range	Description
30-480	Number of channels the Receiver has (multiples of 30)

© Banner Engineering Corp. All rights reserved.

DIP Switch

SPDU Sub-Index	Bit Position	Function	Description
5	0	DIP Switch 6	0 = ON, 1 = OFF
6	1	DIP Switch 5	0 = ON, 1 = OFF
7	2	DIP Switch 4	0 = ON, 1 = OFF
8	3	DIP Switch 3	0 = ON, 1 = OFF
9	4	DIP Switch 2	0 = ON, 1 = OFF
10	5	DIP Switch 1	0 = ON, 1 = OFF

ERROR Code

Value	Status
0	System OK
1	Receiver EEPROM Hard Failure
2	Receiver Alignment/Blanking Configuration Error
3	Reserved for Factory 3
4	Emitter or Wiring Problem
5	Emitter Channel Error
6	Reserved for Factory 6
7	Reserved for Factory 7
8	Reserved for Factory 8
9	Reserved for Factory 9
10	Incompatible Scan and Measurement Mode

Alignment Status

Value	Status
0	Failed
1	Success

Discrete Outputs

SPDU Sub-Index	Bit Position	Function	Description
14	0	Discrete Output 1	0 = OFF, 1 = ON
15	1	Discrete Output 2	0 = OFF, 1 = ON

Analog Output 1 DAC and Analog Output 2 DAC

Range	Description
0-4095	Current DAC value of the analog output

Receiver and Emitter Version Info

The *Receiver and Emitter Version Info* section contains the part numbers and versions of the receiver and emitter firmware.

Modbus		MASK	Member Name
Input Register Address	Modicon Control Register		
31000	999	LOW WORD	Receiver Part Number
31001	1000	HIGH WORD	

Continued on page 66

© Banner Engineering Corp. All rights reserved.
www.bannerengineering.com

Continued from page 65

Modbus		MASK	Member Name
Input Register Address	Modicon Control Register		
31002	1001	LOW BYTE	Receiver Version
31002	1001	HIGH BYTE	RESERVED
31003	1002	LOW WORD	Emitter Part Number
31004	1003	HIGH WORD	
31005	1004	LOW BYTE	Emitter Version
31005	1004	HIGH BYTE	RESERVED

Communications Version Info

The *Communications Version Info* section contains the part number and version of the communications firmware.

Modbus		MASK	Member Name
Input Registers	Modicon Control Register		
32000	1999	LOW WORD	Part Number
32001	2000	HIGH WORD	
32002	2001	LOW BYTE	Version
32002	2002	HIGH BYTE	RESERVED

© Banner Engineering Corp. All rights reserved.

Chapter Contents

Troubleshooting 67
Replacement Parts 68
Contact Us 68
Banner Engineering Corp Limited Warranty 68

Chapter 7 Product Support and Maintenance

Troubleshooting

Error Codes

If the receiver Status LED is red and the 3-digit display reads "**c**" followed by a number from **1** to **10**, a corrective action is needed.

Error Code	Problem	Corrective Action
1	Receiver EEPROM Hard Failure	This problem is caused by a receiver failure that cannot be corrected by the user. Replace the receiver.
2	Receiver Alignment/Blanking Configuration Error	Remove and re-apply sensor supply voltage. If the error code 2 is removed, electrically re-align the sensor ("Alignment/Blanking Button (Electronic Alignment)" on page 12). If the error code persists, contact Banner for further problem-solving techniques.
3	Reserved for Factory	Replace the receiver.
4	Emitter or Wiring Problem	1. Verify the emitter and receiver wiring is correct (see "EZAR Wiring Diagrams" on page 18). 2. Check the status of the emitter Status LED. ◦ **Emitter LED OFF**—Check the voltage across the emitter brown and blue wires. If the voltage across the emitter brown and blue wire is OK, then replace the emitter. ◦ **Emitter Status LED flashing (approx. every 2 seconds)**—Verify that the emitter/receiver sync (pink) wires are correctly installed. 3. Verify the sync wires are correctly installed. Check the sync wire DC voltage. If the voltage is below 1 volt or above 3 volts, then again check the sync wire for possible mis-wiring. Unplug first the receiver and then the emitter to determine the problem source.
5	Emitter Channel Error	The emitter has identified a nonfunctional optical channel. **Temporary fix**—Blank the channel (Section "Alignment/Blanking Button (Electronic Alignment)" on page 12) to ignore the problem **Permanent fix**—Replace the emitter
6	Reserved for Factory	Replace the receiver
7	Reserved for Factory	Replace the emitter
8	Reserved for Factory	Replace the receiver
9	Reserved for Factory	Replace the receiver
10	Incompatible Scan and Measurement Mode	Some measurement modes are incompatible with some scanning modes. **Single-Edge Scan; do not use the following measurement modes**—OD, ID, FBM, LBM, TBM, CBM, Nap Detection **Double-Edge Scan; do not use the following measurement modes**—FBM, LBM, TBM, CBM, Nap Detection

"Dirty" Channel Indicator

If the Status LED is red, but no "c" is visible on the 3-digit display (the scan measurement mode result is displayed), the sensor alignment is marginal. Clean the sensor windows and perform the alignment procedure as necessary. For all corrective actions, first verify proper supply voltages and wiring connectivity. Disconnect and re-connect the sensor cable connectors to verify proper connector installation.

© Banner Engineering Corp. All rights reserved.
www.bannerengineering.com

Replacement Parts

Description		Model
Access cover with label - receiver		**EA5-ADR-1**
Access cover security plate (includes 2 screws, wrench)		**EZA-TP-1**
Wrench, security		**EZA-HK-1**
Standard bracket kit with hardware (includes 2 end brackets and hardware to mount to MSA Series stands)	Black	**EZA-MBK-11**
	Stainless Steel	**EZA-MBK-11N**
Center bracket kit (includes 1 bracket and hardware to mount to MSA Series stands)		**EZA-MBK-12**

Contact Us

Banner Engineering Corp. | 9714 Tenth Avenue North | Plymouth, MN 55441, USA | Phone: + 1 888 373 6767

For worldwide locations and local representatives, visit www.bannerengineering.com.

Banner Engineering Corp Limited Warranty

Banner Engineering Corp. warrants its products to be free from defects in material and workmanship for one year following the date of shipment. Banner Engineering Corp. will repair or replace, free of charge, any product of its manufacture which, at the time it is returned to the factory, is found to have been defective during the warranty period. This warranty does not cover damage or liability for misuse, abuse, or the improper application or installation of the Banner product.

THIS LIMITED WARRANTY IS EXCLUSIVE AND IN LIEU OF ALL OTHER WARRANTIES WHETHER EXPRESS OR IMPLIED (INCLUDING, WITHOUT LIMITATION, ANY WARRANTY OF MERCHANTABILITY OR FITNESS FOR A PARTICULAR PURPOSE), AND WHETHER ARISING UNDER COURSE OF PERFORMANCE, COURSE OF DEALING OR TRADE USAGE.

This Warranty is exclusive and limited to repair or, at the discretion of Banner Engineering Corp., replacement. **IN NO EVENT SHALL BANNER ENGINEERING CORP. BE LIABLE TO BUYER OR ANY OTHER PERSON OR ENTITY FOR ANY EXTRA COSTS, EXPENSES, LOSSES, LOSS OF PROFITS, OR ANY INCIDENTAL, CONSEQUENTIAL OR SPECIAL DAMAGES RESULTING FROM ANY PRODUCT DEFECT OR FROM THE USE OR INABILITY TO USE THE PRODUCT, WHETHER ARISING IN CONTRACT OR WARRANTY, STATUTE, TORT, STRICT LIABILITY, NEGLIGENCE, OR OTHERWISE.**

Banner Engineering Corp. reserves the right to change, modify or improve the design of the product without assuming any obligations or liabilities relating to any product previously manufactured by Banner Engineering Corp. Any misuse, abuse, or improper application or installation of this product or use of the product for personal protection applications when the product is identified as not intended for such purposes will void the product warranty. Any modifications to this product without prior express approval by Banner Engineering Corp will void the product warranties. All specifications published in this document are subject to change; Banner reserves the right to modify product specifications or update documentation at any time. Specifications and product information in English supersede that which is provided in any other language. For the most recent version of any documentation, refer to: www.bannerengineering.com.

For patent information, see www.bannerengineering.com/patents.

© Banner Engineering Corp. All rights reserved.
www.bannerengineering.com

LinkedIn

X

Facebook

Instagram



© 2026. All rights reserved.