Q08 Series Diffuse-Mode Sensors

Datasheet



Low-profile infrared sensors in rugged metal housings

- Miniature right-angle dc photoelectric sensors in rugged die-cast metal housings
- Ultra-thin; only 8 mm (0.3 in) deep
- Totally self-contained; 10 to 30 V dc operation
- Easy mechanical alignment
- Circuitry is completely sealed and epoxy-encapsulated; rated IP67 and NEMA 6
- Select models with NPN (sinking) or PNP (sourcing) output
- Select light operate or dark operate models
- 3-wire hookup; output load capacity to 150 milliamps
- LED indicators for Power ON and Output ON; Output indicator may be used for alignment
- Infrared, 880 nm
- Range of 2.5 mm to 61 mm (0.1 in to 2.4 in)

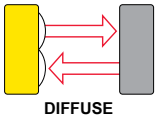

Models	Cable [1]	Output Type	Performance Curves [2]	
			Excess Gain	Beam Pattern
NO5-Q08-AN7 NO5-Q08-AN7V1131	2 m (6.5 ft) 3-Pin Pico QD	NPN/LO	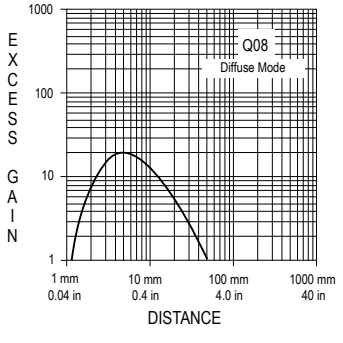	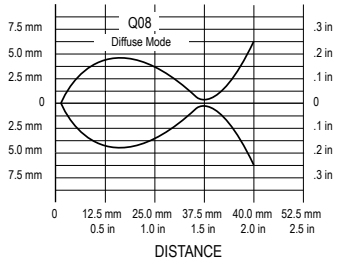
NO5-Q08-RN7 NO5-Q08-RN7V1131	2 m (6.5 ft) 3-Pin Pico QD	NPN/DO		
NO5-Q08-AP7 NO5-Q08-AP7V1131	2 m (6.5 ft) 3-Pin Pico QD	PNP/LO		
NO5-Q08-RP7 NO5-Q08-RP7V1131	2 m (6.5 ft) 3-Pin Pico QD	PNP/DO		

WARNING: Not To Be Used for Personnel Protection

Never use this device as a sensing device for personnel protection. Doing so could lead to serious injury or death. This device does not include the self-checking redundant circuitry necessary to allow its use in personnel safety applications. A sensor failure or malfunction can cause either an energized or de-energized sensor output condition.

1 To order the 9 m (30 ft) cable model, add suffix "W/30" to the cabled model number. For example, NO5-Q08-AN7 W/30. Models with a QD connector require a mating cable.
2 Performance based on 90% reflective white test card.

Original Document
03558 Rev. E

10 July 2014

03558

ПРОМЭЛЕКТРОНИКА/ sales@prom-elec.com

Overview

This small, rugged infrared diffuse proximity mode sensor is contained within an 8-mm deep die-cast metal housing. It is totally self-contained and is powered by 10 to 30V dc. It is ideal for sensing of any reflective surface at up to 2 inches from the sensor face. Typical applications include parts detection on small conveyors and in robot grippers, and other similar short-range sensing applications.

Q08 diffuse sensors have a solid-state output capable of switching loads of up to 150 mA dc, continuous. Four output types are available: NPN sinking/light operate, NPN sinking/dark operate, PNP sourcing/light operate, and PNP sourcing/dark operate.

A light-operate output conducts when the sensor sees the reflection of its own modulated light (an object is present). A dark-operate output conducts when the sensor does not see the reflection of its own modulated light (no object is present). A green LED indicator, visible from the front and left side of the sensor, lights whenever dc power is applied to the sensor. An amber LED, visible from the front and right side of the sensor, lights whenever the sensor output is conducting.



Specifications

Supply Voltage and Current
10 to 30 V dc at 25 mA; 10% maximum ripple

Supply Protection Circuitry
Protected against reverse polarity

Indicators
Two LED indicators:
Green: Lights to indicate dc power ON
Amber: Lights when sensor output is conducting (in “light” condition for light operate models; in “dark” condition for dark operate models)

Construction
Black epoxy-painted die-cast zinc housing, polysulfone thermoplastic lens with two through-mounting holes to accommodate M3 (#4) hardware

Environmental Rating
Meets NEMA standards 1, 2, 4, 6, 12 and 13; IEC IP67

Connections
PVC-jacketed 2 m (6.5 ft) or 9 m (30 ft) cable or 3-pin Pico-style quick-disconnect (QD) fitting available. Cable is 4.0 mm (0.16 inches) diameter.

Operating Conditions
Temperature: 0 °C to +50 °C (+32 °F to +122 °F)
Maximum relative humidity: 90% at 50 °C (non-condensing)

Output Configuration
Solid-state dc output, with four output types available:
NPN sinking/light operate
PNP sourcing/light operate
NPN sinking/dark operate
PNP sourcing/dark operate
Light operate outputs conduct when the receiver sees the reflection of its own modulated light source; Dark operate outputs conduct when the sensor sees dark.

Output Rating
150 mA maximum, continuous
Off-state leakage current is 100 microamps at 30 V dc
On-state saturation voltage is < 200 millivolts at 10 mA dc and < 1 volt at 150 mA dc

Output Response Time
1 millisecond ON and OFF independent of signal strength

Repeatability
200 microseconds (0.2 milliseconds), independent of signal strength

Application Notes
The horizontal axis of the beam pattern represents a line extending outward from the optical center of the Q08 sensor, and perpendicular to the sensor’s lens. For purposes of mounting and alignment, note that the optical center of the Q08’s lens is not the same as its mechanical center.

Certifications
CE

Dimensions

Cabled Models	Quick-Disconnect Models	Optical Center of Beam

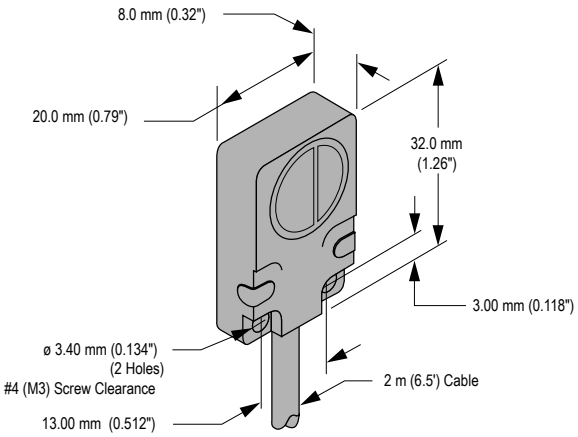

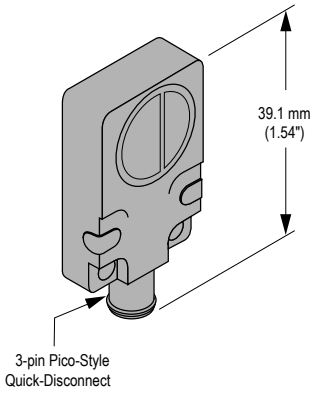

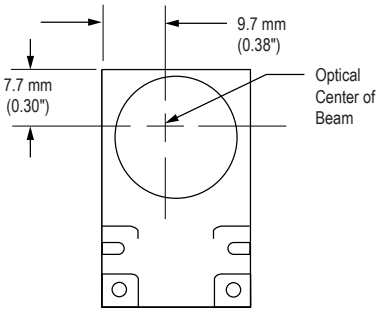

Wiring Diagrams

NPN (Sinking Models)	
Cabled	Quick Disconnect (3-pin Pico-style)

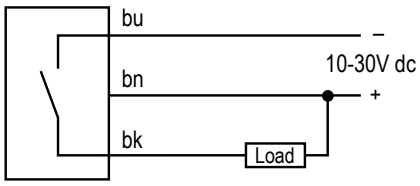

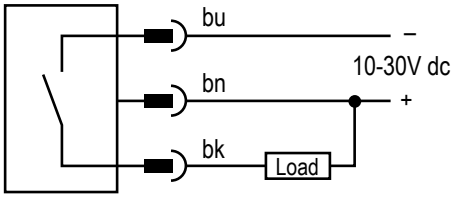

PNP (Sourcing Models)	
Cabled	Quick Disconnect (3-pin Pico-style)

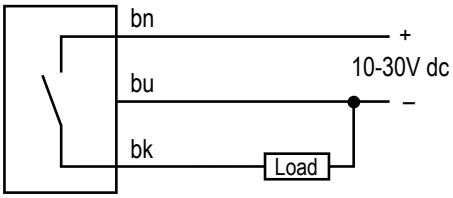

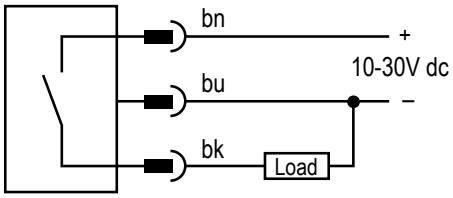

Accessories

3-Pin Snap/Pico-Style Cordsets				
Model	Length	Style	Dimensions	Pinout
PKG3Z-2	2 m (6.56 ft)	Straight	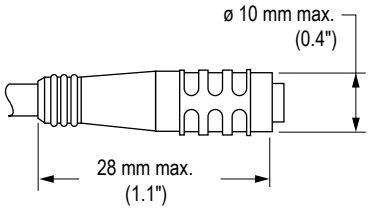	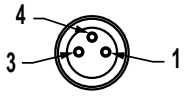 1 = Brown 3 = Blue 4 = Black
PKW3-2	2 m (6.56 ft)	Right-Angle	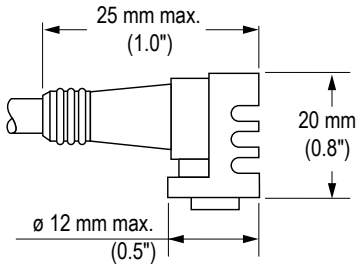	

Banner Engineering Corp Limited Warranty

Banner Engineering Corp. warrants its products to be free from defects in material and workmanship for one year following the date of shipment. Banner Engineering Corp. will repair or replace, free of charge, any product of its manufacture which, at the time it is returned to the factory, is found to have been defective during the warranty period. This warranty does not cover damage or liability for misuse, abuse, or the improper application or installation of the Banner product.

THIS LIMITED WARRANTY IS EXCLUSIVE AND IN LIEU OF ALL OTHER WARRANTIES WHETHER EXPRESS OR IMPLIED (INCLUDING, WITHOUT LIMITATION, ANY WARRANTY OF MERCHANTABILITY OR FITNESS FOR A PARTICULAR PURPOSE), AND WHETHER ARISING UNDER COURSE OF PERFORMANCE, COURSE OF DEALING OR TRADE USAGE.

This Warranty is exclusive and limited to repair or, at the discretion of Banner Engineering Corp., replacement. IN NO EVENT SHALL BANNER ENGINEERING CORP. BE LIABLE TO BUYER OR ANY OTHER PERSON OR ENTITY FOR ANY EXTRA COSTS, EXPENSES, LOSSES, LOSS OF PROFITS, OR ANY INCIDENTAL, CONSEQUENTIAL OR SPECIAL DAMAGES RESULTING FROM ANY PRODUCT DEFECT OR FROM THE USE OR INABILITY TO USE THE PRODUCT, WHETHER ARISING IN CONTRACT OR WARRANTY, STATUTE, TORT, STRICT LIABILITY, NEGLIGENCE, OR OTHERWISE.

Banner Engineering Corp. reserves the right to change, modify or improve the design of the product without assuming any obligations or liabilities relating to any product previously manufactured by Banner Engineering Corp.