Rope Pull Emergency Stop Switches

Instruction Manual

RP-LS42F-xxLE Series 42 mm Latching Switches with Rope/Cable Actuators

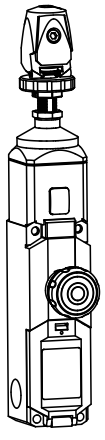

- Positive-opening safety contacts (IEC 60947-5-1), not dependent upon springs
- Both safety contacts latch open when rope is pulled, broken, or if tension is reduced; requires manual reset (IEC 60947-5-5)
- Compliant with ANSI B11.19, NFPA 79, IEC/EN 60204-1 and ISO 13850 Emergency Stop requirements
- Heavy-duty thermoplastic housing (polyamide), rated IP67, suitable for demanding industrial environments; insulated device
- Innovative quick-connect design provides quick, easy rope fixing and tensioning on RP-LS42F-..LE models
- RP-LS42F-..LE models have an integrated emergency stop button
- Rope spans of 25 m (82 ft), 37.5 m (125 ft), and 75 m (245 ft), depending on model
- Monitoring contacts operate opposite the safety contacts, for monitoring by another device or interfaced with EZ-LIGHT® indicators
- Tension indicator window indicates proper rope tension for operation or safety contacts latched open (the rope pull or the E-stop button is actuated)

Models

Maximum Rope Length / Force			Rope Connection	E-Stop Button
75 m (246.1 ft) / 300 N	**38 m (124.7 ft) / 175 N**	**25 m (82.0 ft) / 100 N**		
RP-LS42F-75LE	RP-LS42F-38LE	RP-LS42F-25LE	Turnbuckle	Yes

Figure 1. Contact State

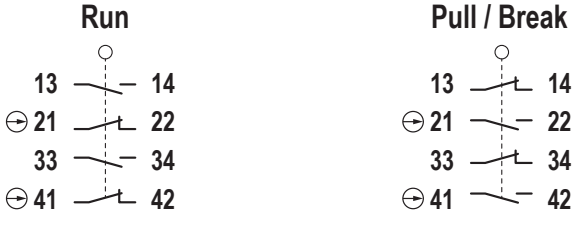

Note: This symbol for a positive-opening safety contact (IEC 60947-5-1) is used in the switching diagram to identify the point in actuator travel where the normally-closed safety contact is fully open.

Figure 2. Switching Diagram

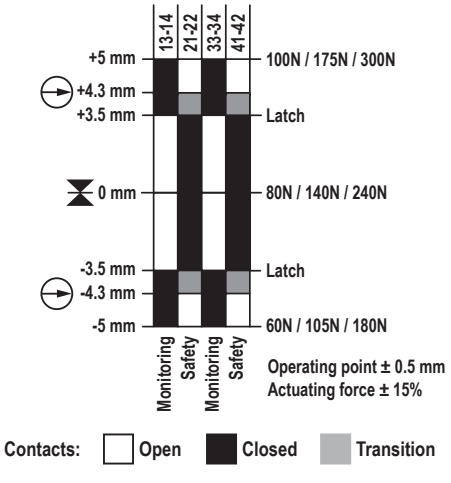

Important... Read this before proceeding!

The user is responsible for satisfying all local, state, and national laws, rules, codes, and regulations relating to the use of this product and its application. Banner Engineering Corp. has made every effort to provide complete application, installation, operation, and maintenance instructions. Please contact a Banner Applications Engineer with any questions regarding this product.

The user is responsible for making sure that all machine operators, maintenance personnel, electricians, and supervisors are thoroughly familiar with and understand all instructions regarding the installation, maintenance, and use of this product, and with the machinery it controls. The user and any personnel involved with the installation and use of this product must be thoroughly familiar

Original Document
181295 Rev. C

8 April 2022

181295

ПРОМЭЛЕКТРОНИКА/ sales@prom-elec.com

with all applicable standards, some of which are listed within the specifications. Banner Engineering Corp. makes no claim regarding a specific recommendation of any organization, the accuracy or effectiveness of any information provided, or the appropriateness of the provided information for a specific application.

WARNING:
- **Not a safeguarding device**
- Failure to follow these instructions could result in serious injury or death.
- This device is not considered a safeguarding device because it requires an overt action by an individual to stop machine motion or hazards. A safeguarding device limits or eliminates an individual's exposure to a hazard without action by the individual or others. This device cannot be substituted for required safeguarding. Refer to the applicable standards to determine those requirements.

Overview

Models RP-LS42F-xxLE are rope pull (cable pull) emergency stop switches in compact, limit switch style housings made of high impact thermoplast. When used with steel wire rope, they can provide continual access along the span for emergency stop actuation. Red PVC-covered 3 mm diameter wire rope is recommended (see Rope Pull Hardware on page 10). The rope pull system is the switch(es), the rope, supporting hardware, tensioning springs/hardware, and anchor points.

When the rope is properly tensioned, the red arrows are centered in the tension indicator window, the safety contacts at terminals 21/22 and 41/42 are closed, and the monitoring contacts at terminals 13/14 and 33/34 are opened (see *Tensioning the Rope*). The safety contacts open when there is a cable-pull or cable-break situation, and remain open until the built-in reset button is manually reset (see Figure 2 on page 1). The safety contacts can be interfaced in either a single-channel or dual-channel method (see Hookup on page 6). Terminals 13/14 and 33/34 are for non-safety monitoring purposes only.

Emergency Stop Considerations

NFPA 79, ANSI B11.19, IEC/EN 60204-1, and ISO 13850 specify emergency stop requirements for rope (cable) pull installations, including the following:

- Be located where emergency shutdown is required
- Be continuously operable, easily visible, and readily accessible. Do not mute or bypass
- Provide constant tension of the rope or cable pull
- The rope or cable pull, as well as any flags or markers, must be colored RED
- The rope or cable pull must have the capability to react to a force in any direction. This requires a spring at the anchor point or an opposing rope pull switch
- The switch must have:
  - A self-latching function that requires a manual reset after actuation
  - Have direct opening operation
  - Detect a slack condition or a break of the rope or cable

WARNING:
- **Do not mute or bypass any emergency stop device**
- Muting or bypassing the safety outputs renders the emergency stop function ineffective.
- ANSI B11.19, NFPA 79 and IEC/EN 60204-1 require that the emergency stop function remains active at all times.

Mechanical Installation

The device must not be affected by environmental conditions. Install the device so that operation is not impeded, but is protected against inadvertent operation (for example, accidental actuation by being bumped or leaned against). Do not operate the switch using a tool. Do not expose the switch to excessive shocks and vibrations, otherwise the switch may be deformed or damaged, causing malfunction or operation failure. RP-LS42F-xxLE switches are not intended for outdoor applications.

All mounting hardware is supplied by the user. Fasteners must be of sufficient strength to guard against breakage. Use of permanent fasteners or locking hardware is recommended to prevent the loosening or displacement of the switch body. The mounting holes in the switch body and the actuator accept M5 (#10) hardware.

Installation Guidelines

- The wire rope should be easily accessible, red in color for E-Stop functions, and visible along its entire length. Markers or flags may be fixed on the rope to increase its visibility
- Mounting points, including support points, must be rigid and allow sufficient space around the rope to allow easy access
- The rope should be free of friction at all supports. Pulleys are recommended, especially with rope lengths of greater than 25 m (82 ft). Lubrication may be necessary. Contamination (for example, dirt, metal chips or swarf, etc.) of the system must be prevented from adversely effecting operation
- Use only large pulleys, for example, RPA-DP1-1, when routing the rope around a corner or whenever direction changes, even slightly
- Never run rope through conduit or other tubing
- Never attach weights to the rope

- A tensioning spring is required to ensure compliance with direction-independent actuation of the wire rope and must be installed on the load bearing structure (for example, machine frame, wall, etc.)
- Temperature affects rope tension. The wire rope expands (lengthens) when temperature increases, and contracts (shrinks) when temperature decreases. Significant temperature variations require frequent checks of the tension adjustment
- Do not exceed the maximum specified total wire rope length. This length may be reduced due to temperature variations as described in Figure 3 on page 3

Figure 3. Maximum Temperature Variation by Length (Steel Rope/Wire)

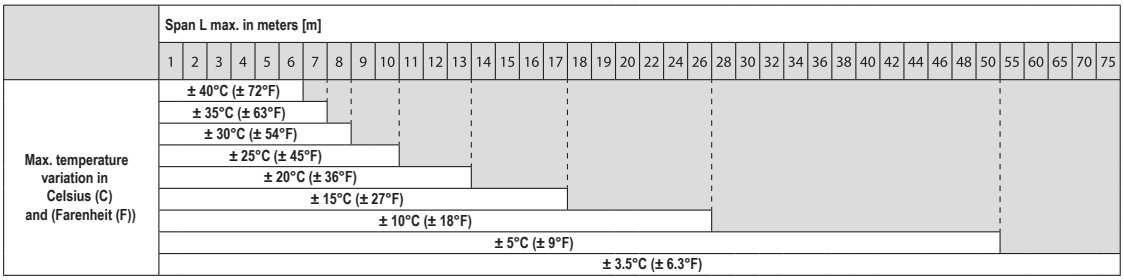

WARNING:
- **Properly install the device**
- Failure to follow the installation instructions can result in ineffective or non-operation of the Banner device, which could create an unsafe condition resulting in serious injury or death.
- Follow all installation instructions.

Installation Procedure

1. Mount the switch securely on a solid, stationary surface that can accommodate the forces of pulling the rope.

   See Dimensions on page 9 for the mounting hole pattern (4 x M5, Max. torque = 2 Nm).

   Important: Mount RP-LS42F-xxLE such that the E-Stop button is clearly visible and readily accessible.

2. At the opposite end of the rope span, fasten an individual eye bolt (such as RPA-EB1-1) or the Tensioning Spring Assembly (RPA-S4-1 or RPA-S6-1) eye bolt to an anchor that is solid and stationary, and can withstand the constant tension and pull of the rope. Do not exceed the maximum length for the specific switch.
3. For applications using an **Individual Tensioning Spring** (RPA-S3-1 or RPA-S5-1), assemble the Spring Breakage Protection Cable (such as RPAK-C2SBP-1) and the thimble/clamp loop at the end of the rope, as shown in Figure 4 on page 4. Keep the rope's PVC cover intact along its complete length, except where it attaches to the clamps at either end. Use Tensioning Spring RPA-S5-1 for the 25 m and the 38 m switches in straight line applications and RPA-S3-1 for 75 m applications or in any application in which the direction changes.
4. For applications using a **Tensioning Spring Assembly** (such as RPA-S4-1 or RPA-S6-1), install the rope using the following steps.

   See Figure 5 on page 4 and Figure 7 on page 5.

   a) Strip away a minimum of 100 mm to 150 mm (4 in to 6 in) of the red rope sheathing. Additional length of red sheathing maybe required to be removed depending on total slack in the rope.
   b) Using a 4 mm hex wrench, loosen the set screw on the switch fitting.
   c) Insert the cable into the center hole in the clamp, pull the excess rope through, and loop the rope back through the clamp.
   d) Pull the cut end of the rope out from the side hole until there is no excess rope in the clamp.
   e) Make sure that no red sheathing is within the clamping mechanism.
   f) Using the 4 mm hex wrench, tighten the set screw on the switch fitting.

Figure 4. Individual Tension Springs

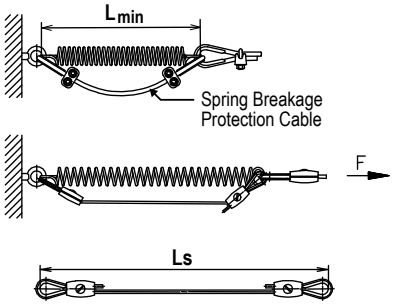

Figure 5. Tension Spring Assembly

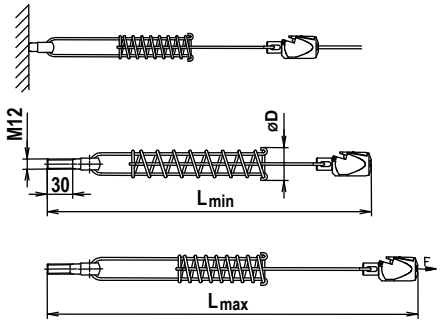

	RP-LS42F-25xx/-38xx	RP-LS42F-75xx
Tensioning Spring	**RPA-S5-1**	**RPA-S3-1**
L_{min}	185 mm	201 mm
Ls	300 mm	300 mm
Spring Rating	2.5	3.5

	RP-LS42F-25xx/-38xx	RP-LS42F-75xx
Tensioning Spring Assembly	**RPA-S6-1**	**RPA-S4-1**
L_{min}	362 mm	465 mm
L_{max}	466 mm	635 mm
ØD	42 mm	50 mm

5. Route the rope using pulleys (recommended) or eye bolts at each support point (securely/rigidly mounted) as described in Figure 6 on page 4.

Important: Always use a pulley when changing the direction of the rope or routing the rope around a corner, regardless of the angle. Minimize friction at all supports and change of direction; do not run rope through conduit or other tubing.

Figure 6. Assembly of Rope and Hardware

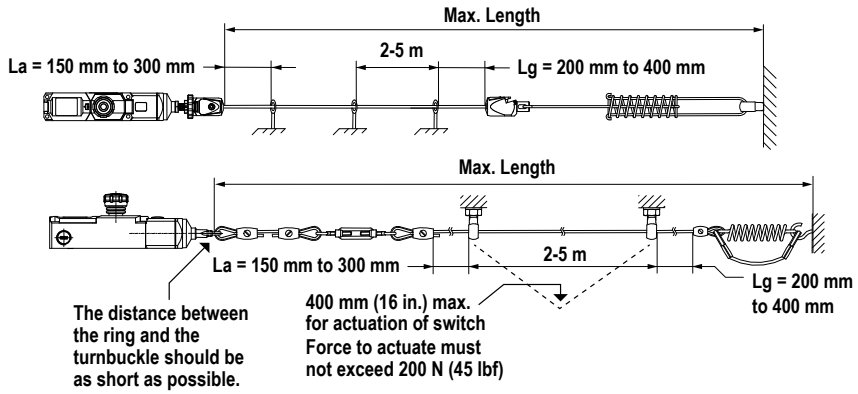

6. For models **RP-LS42F-..LE with integral turnbuckle**:

   These models have their own integral turnbuckle and clamp to tension the rope and to hold it in place. This innovative design provides for quick and easy rope fixing and tensioning, and requires no external turnbuckle, nor any additional clamp at the switch end of the rope. To install the rope, as shown in Figure 7 on page 5:

   a) Strip away a minimum of 100 mm to 150 mm (4 in to 6 in) of the red rope sheathing. Additional length of red sheathing maybe required to be removed depending on total slack in the rope.
   b) Using a 4 mm hex wrench, loosen the set screw on the switch fitting.
   c) Insert the cable into the center hole in the clamp, pull the excess rope through, and loop the rope back through the clamp.
   d) Pull the cut end of the rope out from the side hole until there is no excess rope in the clamp.
   e) Make sure that no red sheathing is within the clamping mechanism.
   f) When affixing at the switch (with integral turnbuckle), after the rope has been strung the complete length, pull the cable so that the approximate tension is achieved.
   g) When the tension is correct, tighten the set screw to hold the rope firmly in place.
   h) Make sure that the cut ends of the rope do not present a hazard (cutting, scraping, snagging, etc.). Electrical/plastic tape or plastic tubing can be used to cover any sharp ends of the rope.

Figure 7. Install the Rope with Integral Turnbuckle

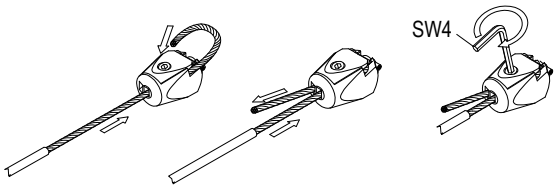

Tensioning the Rope

After the rope span components are installed, apply tension to the rope until the arrows in the tensioning indicator are centered on the line in the tension indicator window. This indicates sufficient rope tension. (Contacts 21/22 and 41/42 will close.) Course tensioning can be accomplished by pulling excess rope through the clamp until the tension indicator is approximately centered and then re-tightening the clamp. It is recommended that tensioning be accomplished at a median temperature to accommodate fluctuations.

1. Models **RP-LS42F-..LE and Tensioning Spring Assembly with Integral Turnbuckle**:
    a. Using a 17 mm wrench, make sure that the locking hex-nut is loose from the base of the switch.
    b. Using the thumb wheel, rotate the shaft of the switch until the arrows are centered on the tension indicator.
    c. Re-tighten the locking hex nut to the base of the switch (do not over tighten).

Figure 8. Tension Indicator Window: Too little tension shown



Figure 9. Tension Indicator Window: proper tension shown

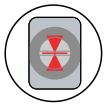

Figure 10. Applying tension to the rope (models RP-LS42F-..LE)

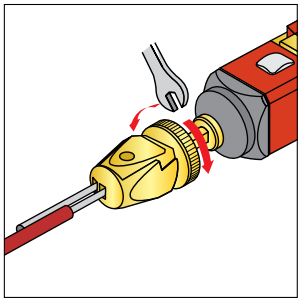

2. Reset the latch by pulling on the button until it catches in the armed position.

Figure 11. Reset the latch by achieving the proper tension and pulling the button

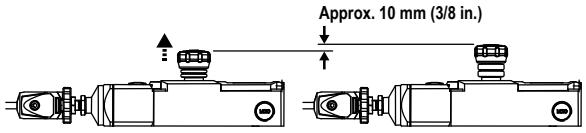

3. Pull hard on the rope until the switch trips, release, and reset the latch several times. If the arrows in the tensioning indicator window do not return to the correct position (centered on the line in the window), further tighten or loosen the rope tension as needed, until proper tension is shown.
4. Check the tension adjustment periodically to ensure proper operation.

Electrical Installation

WARNING:
- **Risk of electric shock**
- Use extreme caution to avoid electrical shock. Serious injury or death could result.
- Always disconnect power from the safety system (for example, device, module, interfacing, etc.), guarded machine, and/or the machine being controlled before making any connections or replacing any component. Lockout/tagout procedures might be required. Refer to OSHA 29CFR1910.147, ANSI Z244-1, or the applicable standard for controlling hazardous energy.
- Make no more connections to the device or system than are described in this manual. Electrical installation and wiring must be made by a Qualified Person [1] and must comply with the applicable electrical standards and wiring codes, such as the NEC (National Electrical Code), NFPA 79, or IEC 60204-1, and all applicable local standards and codes.

Connection to a Machine

Electrical installation must be made by qualified personnel [2] and must comply with NEC (National Electrical Code), NFPA 79 or IEC/EN 60204-1, and all applicable local standards. It is not possible to give exact wiring instructions for a device that interfaces to a multitude of machine control configurations. The following is general in nature; it is recommended to perform a risk assessment to ensure appropriate application, interfacing/hookup, and risk reduction (see ISO 12100 or ANSI B11.0).

Access the Wiring Chamber

Access the wiring chamber via the hinged door.

1. To open the wiring chamber, insert a flat screwdriver blade into the slot in the cover and pry the cover open.
2. Select the best wiring entrance, and remove the knockout.
3. If required, thread in the 1/2 in x 14 NPSM conduit adapter (supplied) or the optional M20 × 1.5 cable gland.

To connect wires to the terminals:

1. Insert the screwdriver blade (flat, 2.5 mm) into the slot next to the desired wiring terminal.
2. Twist the screwdriver blade 45° in the slot to open the terminal jaws; insert the wire (6 mm to 8 mm bare wire or wire ferrule).
3. Hold the wire in place and remove the screwdriver.
4. Make sure that all wires are securely held and will not short to adjacent terminals (that is, no bent or stray strands of wire).
5. Snap the access cover shut (a click will be heard). Banner recommends securing the access cover with the supplied #2-28 × 0.25 screw to hinder unauthorized access and ensure IP67 environmental rating (do not over tighten the screw).

Figure 12. Accessing the wiring chamber

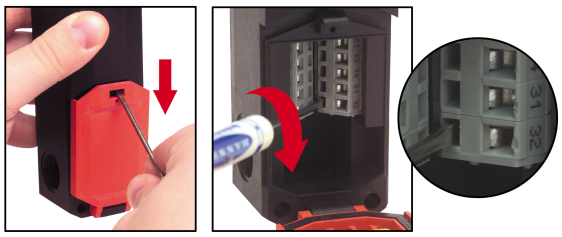

Hookup

These rope pull switches have redundant pairs of safety contacts, so they may be wired for either single-channel or dual-channel hookup to a safety module, safety controller, or E-stop circuit. Monitor contacts may be wired as desired to an external alarm device. A risk assessment will determine the appropriate level of safety circuit performance (integrity) and the means of interfacing the switch(es) with the machine control circuit.

Single-Channel Hookup: Wire contacts 21/22 and 41/42 in series to the input of a safety module or E-stop circuit.

Dual-Channel Hookup: Wire contacts 21/22 and 41/42 independently to the inputs of a dual-channel safety module as show in Figure 13 on page 7.

[1] A person who, by possession of a recognized degree or certificate of professional training, or who, by extensive knowledge, training and experience, has successfully demonstrated the ability to solve problems relating to the subject matter and work.
[2] A Qualified Person possesses a recognized degree or certificate or has extensive knowledge, training, and experience to solve problems relating to the emergency stop installation.

Figure 13. Safety Contacts at 21/22 and 41/42

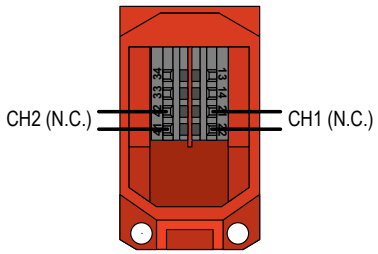

To ensure the highest level of reliability (Control Reliable or Category 4, for example), wire the positively-driven safety contacts (terminals 21/22 and 41/42) in a dual channel hookup to a safety module (for example, ES-FA-9AA), safety controller (for example, XS/SC26 or SC10-2roe), or the safety related part of the machine control that complies with the required level of safety performance.

Two functions of the safety module or safety controller are:

1. To provide a means of monitoring the contacts of both safety switches for contact failure, and to prevent the machine from restarting if either switch fails.
2. To provide a reset routine after re-arming/resetting the rope pull switch (returning the safety contacts to their closed position). This prevents the controlled machinery from restarting by simply resetting the switch. This necessary reset function is required by ANSI B11.0 and NFPA 79 machine safety standards.

WARNING:
- **Ensure the safety circuit integrity**
- The safety circuit integrity level is affected by the design and installation of the safety devices and the means of interfacing with those devices.
- Perform a risk assessment to determine the appropriate safety circuit integrity level or category to ensure the expected risk reduction is achieved and all applicable regulations and standards are in compliance (see ANSI B11.0 and ANSI B11.19, ISO 12100 and ISO13849-1 or the applicable standards).

WARNING:
- **Connect two or more devices to the same safety module (controller) in series**
- Connecting devices in parallel defeats the switch contact monitoring ability of the module and creates an unsafe condition that could result in serious injury or death.
- Failure to test each device individually in this manner could result in undetected faults and create an unsafe condition that could result in serious injury or death.
- Connect the contacts of the corresponding pole of each switch in series. Never connect the contacts of multiple switches in parallel. Individually actuate (engage) each device, then release (or re-arm) and reset the safety module. This allows the module to check each switch and its wiring to detect faults. Perform this check during the prescribed checkouts.

Maintenance/Checkout

At switch installation or replacement and at machine set up, a Designated Person [3] must test each switch for proper machine shutdown response and check the switch(es) and installation for proper operation, physical damage, mounting (looseness), and excessive environmental contamination. This must also take place on a periodic schedule determined by the user, based on the severity of the operating environment and the frequency of switch actuations. This is generally determined by a risk assessment, such as the one contained in ANSI B11.0. Adjust, repair, or replace components as needed. If inspection reveals contamination on the switch, thoroughly clean the switch and eliminate the cause of the contamination. Replace the switch and/or appropriate components when any parts or assemblies are damaged, broken, deformed, or badly worn; or if the electrical/mechanical specifications (for the environment and operating conditions) have been exceeded. Always test the control system for proper functioning under machine control conditions after performing maintenance, replacing the switch, or replacing any component of the switch.

Additional items that should be included in the checkout and/or regularly scheduled maintenance of a rope pull system:

- Check for proper rope tension and adjust as needed
- Verify free operation (no binding) of the rope and proper tripping when the rope is pulled
- Periodically lubricate the pulleys and other moving parts associated with the rope
- Repair any loose or damaged hardware, worn/frayed rope (cable), missing red rope sheathing or flags/markers (if used)
- Remove or clean off any contamination and eliminate its cause

[3] A Designated Person is identified in writing by the employer as being appropriately trained to perform a specified checkout procedure.

Repairs

Contact Banner Engineering for troubleshooting of this device. **Do not attempt any repairs to this Banner device; it contains no field-replaceable parts or components.** If the device, device part, or device component is determined to be defective by a Banner Applications Engineer, they will advise you of Banner's RMA (Return Merchandise Authorization) procedure.

Important: If instructed to return the device, pack it with care. Damage that occurs in return shipping is not covered by warranty.

Specifications

Contact Rating
3 A at 240 V AC maximum, 2.5 kV maximum transient tolerance (U_{imp})

European Rating
U_i = 250 V AC, I_{the} = 10 A
Rated supply voltage 240 V (U_e)
Utilization categories: AC-15: U_e/I_e 240 V / 3 A
Rated conditional short-circuit current: 1000 A

Electrical Protection Class
II, protective insulation

Contact Function
Slow make and break contacts, 2 N.C., 2 N.O. (Zb)
Direct Opening Operation acc. IEC/EN60947-5-1 Annex K

Contact Material
Silver-nickel alloy

Latching Device
According to DIN EN 60947-5-5, IEC 60947-5-5, ISO 13850 (Compliant with ANSI B11.19)

Switching Frequency
≤ 20 operations per minute

Maximum Rope Pull Length
See Figure 3 on page 3
RP-LS42F-25xx: 25 m (82.0 ft); Force: 100 N
RP-LS42F-38xx: 38 m (124.7 ft); Force: 175 N
RP-LS42F-75xx: 75 m (246.1 ft); Force: 300 N

Wire Rope Diameter
2 mm to 5 mm (3 mm is recommended; see Rope Pull Hardware on page 10)

Mechanical Life
1 x 10^5 switching cycles (max.) acc. to IEC 60947-5-5

B10d
1 x 10^5 cycles at DC-13; 24 V; I_{e2} = 0.1 A

Short Circuit Protection
6 A Slow Blow (Type gG). Recommended external fusing or overload protection.

Wire Connections
8 x cage clamp terminals
Conductor cross-sections: 0.25–1.5 mm^2 (16 AWG) solid or stranded with ferrules

Construction
Housing and cover: Polyamide PA 6 GV (UL94-V0)
Actuator: Zinc die-cast / Steel

Cable Entry
M20 × 1.5 threaded entrance (×3)
Adapter supplied to convert M20 × 1.5 to ½ in - 14 NPT threaded entrance

Environmental Rating
IEC IP67 according to IEC/EN60529
NEMA 4X (indoor use only)
The degree of protection specified applies solely to a property closed cover and the use of an equivalent cable gland with adequate cable or conduit.

Operating Conditions
Temperature: –25 °C to +70 °C (–13 °F to +158 °F) (no freezing / no condensation)

Mounting
4 × M5 (#10) screws (on flat and stiff surface) Max. torque = 2 Nm

Weight
RP-LS42F-xxLE: approximately 0.69 kg (1.43 lbs)

Application Notes
Failure to follow the installation guidelines and procedures can result in the ineffective or non-operation of the rope pull switch system that could create an unsafe condition.

Standards
VDE 0660 T100, DIN EN 60947-1, IEC 60947-1
VDE 0660 T200, DIN EN 60947-5-1, IEC 60947-5-1
VDE 0660 T210, DIN EN 60947-5-5, IEC 60947-5-5
ISO 13850 (Compliant with ANSI B11.19 and NFPA 79)

EU-Conformity
According to directive 2006/42/EC (Machinery Directive)

Approvals
DGUV, $_C$CSA$_{US}$ A300 (same polarity only)

Certifications

Banner Engineering Europe Park Lane, Culliganlaan 2F bus 3, 1831 Diegem, BELGIUM

Turck Banner LTD Blenheim House, Blenheim Court, Wickford, Essex SS11 8YT, Great Britain

Dimensions

Figure 14. RP-LS42F-xxLE Series

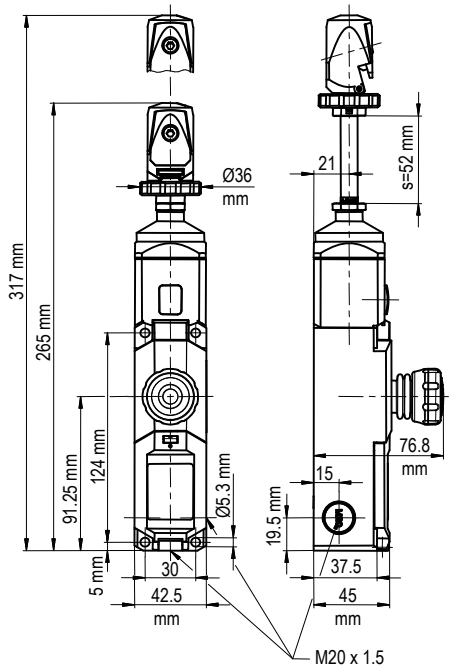

Accessories for RP-LS42F..

EZ-LIGHTS

See datasheet p/n 171472 for additional information.

Model	Number of Colors	Color	Connection	Quantity	Product Image
SI-K30LGRX7P	2	GREEN/RED indication	130 mm (5 in) flying lead wires	1 each	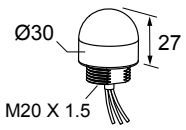
SI-K30LRXX7P	1	RED indication		1 each	
SI-K30LYRX7P	2	YELLOW/RED indication		1 each	

Cable Gland

Model	Size	For Cable Diameter	Dimensions	Used With
SI-QS-CGM20	M20 × 1.5 Plastic	5.0 to 12.0 mm (0.20 to 0.47 inches)	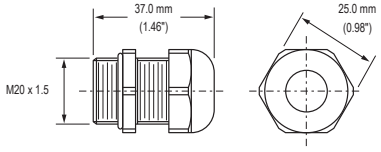	RP-LS42 Rope Pull Switch SI-GL42 Safety Interlock Switch SI-LS31 Safety Interlock Switch SI-LS42 Safety Interlock Switch SI-LS100 Safety Interlock Switch SI-QS90 Safety Interlock Switch

Conduit Adapter (Supplied)

Model	Size	Thread Conversion	Dimensions	Used With
SI-QS-M20	½ in-14 NPT Plastic	M20 × 1.5 to ½ in-14 NPT	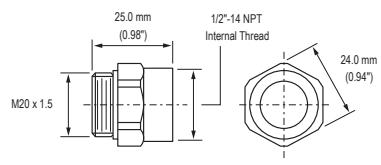	SI-GL42 Safety Interlock Switch SI-LS31 Safety Interlock Switch SI-LS42 Safety Interlock Switch SI-LS100 Safety Interlock Switch SI-QS90 Safety Interlock Switch RP-LS42 Rope Pull Switch

Rope Pull Hardware

For additional sizes, see www.bannerengineering.com.

Model	Length	Description	Wire Rope
RPA-C2-10	10 m (32.8 ft)	3 mm steel wire rope with 0.5 mm red PVC jacket (unterminated)	
RPA-C2-20	20 m (65.6 ft)		
RPA-C2-40	40 m (131.2 ft)		
RPA-C2-50	50 m (164.0 ft)		
RPA-C2-80	80 m (262.4 ft)		

Model	Quantity	Description	Thimble
RPA-T2-4	4	Thimble for 3 mm wire rope	

Model	Quantity	Description	Clamp
RPA-CC2-4	4	Clamp for 3 mm wire rope	

Model	Quantity	Description	Turnbuckle
RPA-TA1-1	1	#4 Turnbuckle	

Model	Quantity	Description	Eye Bolt
RPA-EB1-1	1	¼ in -20 Eye bolt (3 in bolt shaft)	

Model	Quantity	Description	Pulley
RPA-P1-1	1	Hanging pulley for in-line use	
RPA-DP1-1	1	Right-angle mount deflection pulley for corner turns (90° to 180°)	

Model	Quantity	Description	Tensioning Spring	Used With
RPA-S3-1	1	Tensioning spring #3		RP-RM83 models (75 m) RP-LS42 models (75 m)
RPA-S5-1	1	Tensioning spring #5		RP-RM83F-..38.. RP-LS42 models (25 & 38 m)

Model	Quantity	Description	Tensioning Spring	Used With
RPA-S4-1	1	Tensioning spring #4 with built-in eye bolt (used with customer-supplied M12 × 1.75 pitch nut), cable thimble, clamping, tensioning, and overload protection.		RP-RM83 models (75 m) RP-LS42 models (75 m)

Model	Quantity	Description	Tensioning Spring	Used With
RPA-S6-1	1	Tensioning spring #6 with built-in eye bolt (used with customer-supplied M12 × 1.75 pitch nut), cable thimble, clamping, tensioning, and overload protection.		RP-RM83 models (38 m) RP-LS42 models (25 & 38 m)

Rope Pull Hardware Kits

Note: Tensioning springs ordered separately

Kit Model	3 mm Rope (Length)	Thimbles (Each)	Clamps (Each)	Eye Bolts (Each)	In-Line Pulleys (Each)	Turnbuckle (Each)
RPAK-C2SBP-1	0.5 m (1.5 ft)	2	2	-	-	-
RPAK-CH2-10	10 m (32.8 ft)	4	4	3	-	-
RPAK-CHP2-10		4	4	3	3	-
RPAK-CH2-10-TA		4	4	3	-	1
RPAK-CHP2-10-TA		4	4	3	3	1
RPAK-CH2-20	20 m (65.6 ft)	4	4	6	-	-
RPAK-CHP2-20		4	4	6	6	-
RPAK-CH2-20-TA		4	4	6	-	1
RPAK-CHP2-20-TA		4	4	6	6	1
RPAK-CH2-40	40 m (131.2 ft)	4	4	11	-	-
RPAK-CHP2-40		4	4	11	11	-
RPAK-CH2-40-TA		4	4	11	-	1
RPAK-CHP2-40-TA		4	4	11	11	1
RPAK-CH2-50	50 m (164.0 ft)	4	4	14	-	-
RPAK-CHP2-50		4	4	14	14	-
RPAK-CH2-50-TA		4	4	14	-	1
RPAK-CHP2-50-TA		4	4	14	14	1
RPAK-CH2-80	80 m (262.4 ft)	4	4	21	-	-
RPAK-CHP2-80		4	4	21	21	-
RPAK-CH2-80-TA		4	4	21	-	1
RPAK-CHP2-80-TA		4	4	21	21	1

U.S. Application Standards

ANSI B11.0 Safety of Machinery, General Requirements, and Risk Assessment
ANSI B11.19 Performance Criteria for Safeguarding
NFPA 79 Electrical Standard for Industrial Machinery

International/European Standards

EN ISO 12100 Safety of Machinery – General Principles for Design — Risk Assessment and Risk Reduction
ISO 13850 (EN 418) Emergency Stop Devices, Functional Aspects – Principles for Design
IEC 62061 Functional Safety of Safety-Related Electrical, Electronic and Programmable Control Systems
EN ISO 13849-1 Safety-Related Parts of Control Systems
EN 60204-1 Electrical Equipment of Machines Part 1: General Requirements
IEC 60947-1 Low Voltage Switchgear – General Rules
IEC 60947-5-1 Low Voltage Switchgear – Electromechanical Control Circuit Devices
IEC 60947-5-5 Low Voltage Switchgear – Electrical Emergency Stop Device with Mechanical Latching Function

EU/UK Declaration of Conformity (DoC)

Banner Engineering Corp. herewith declares that these products are in conformity with the provisions of the listed directives, regulations, and all essential health and safety requirements have been met. For the complete DoC, please go to www.bannerengineering.com.

Product	Directive
RP-LS42F-..LE Series Rope Pull Emergency Stop Switches	EU: 2006/42/EC UK: Machinery (Safety) Regulations 2008

Representative in EU: Spiridon Lachanidis, Managing Director, **Banner Engineering Europe** Park Lane, Culliganlaan 2F bus 3, 1831 Diegem, BELGIUM

Representative in UK: Tony Coghlan, Managing Director, **Turck Banner LTD** Blenheim House, Blenheim Court, Wickford, Essex SS11 8YT, Great Britain

Banner Engineering Corp. Limited Warranty

Banner Engineering Corp. warrants its products to be free from defects in material and workmanship for one year following the date of shipment. Banner Engineering Corp. will repair or replace, free of charge, any product of its manufacture which, at the time it is returned to the factory, is found to have been defective during the warranty period. This warranty does not cover damage or liability for misuse, abuse, or the improper application or installation of the Banner product.

THIS LIMITED WARRANTY IS EXCLUSIVE AND IN LIEU OF ALL OTHER WARRANTIES WHETHER EXPRESS OR IMPLIED (INCLUDING, WITHOUT LIMITATION, ANY WARRANTY OF MERCHANTABILITY OR FITNESS FOR A PARTICULAR PURPOSE), AND WHETHER ARISING UNDER COURSE OF PERFORMANCE, COURSE OF DEALING OR TRADE USAGE.

This Warranty is exclusive and limited to repair or, at the discretion of Banner Engineering Corp., replacement. **IN NO EVENT SHALL BANNER ENGINEERING CORP. BE LIABLE TO BUYER OR ANY OTHER PERSON OR ENTITY FOR ANY EXTRA COSTS, EXPENSES, LOSSES, LOSS OF PROFITS, OR ANY INCIDENTAL, CONSEQUENTIAL OR SPECIAL DAMAGES RESULTING FROM ANY PRODUCT DEFECT OR FROM THE USE OR INABILITY TO USE THE PRODUCT, WHETHER ARISING IN CONTRACT OR WARRANTY, STATUTE, TORT, STRICT LIABILITY, NEGLIGENCE, OR OTHERWISE.**

Banner Engineering Corp. reserves the right to change, modify or improve the design of the product without assuming any obligations or liabilities relating to any product previously manufactured by Banner Engineering Corp. Any misuse, abuse, or improper application or installation of this product or use of the product for personal protection applications when the product is identified as not intended for such purposes will void the product warranty. Any modifications to this product without prior express approval by Banner Engineering Corp will void the product warranties. All specifications published in this document are subject to change; Banner reserves the right to modify product specifications or update documentation at any time. Specifications and product information in English supersede that which is provided in any other language. For the most recent version of any documentation, refer to: www.bannerengineering.com.

For patent information, see www.bannerengineering.com/patents.

© Banner Engineering Corp. All rights reserved