SI-LS83 Series Safety Limit Switch Instruction Manual

SI-LS83 Features

SI-LS83 Series Safety Limit (Position) Switch for Interlocking and Position Monitoring

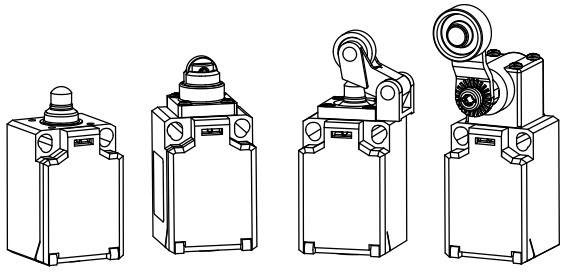

- Limit-switch style (Type 1 per ISO 14119) where actuating elements are integrated with the enclosure
- Positive opening safety contacts (IEC 60947-5-1) (not dependent on springs)
- Can be used for safety or non-safety interlocking and position monitoring
- Choice of actuating systems: plunger, roller, spindle-mount lever, and lever styles
- Actuator head rotatable in 90° increments
- IP65 glass-reinforced thermoplastic switch housing
- Insulated device (IEC 60947-5-1) on all models with plastic housings
- When properly interfaced or used with an appropriate controller, two switches monitoring an individual guard can achieve safety category 4, per ISO 13849-1
- Typical applications include monitoring sliding (laterally) gates and guards on machines and in safety fencing systems

SI-LS83 Models

Interlock switch models

Model	Actuating System (See Figure)	Contact Configuration	Switching Diagram
SI-LS83PBD	Plunger	One N.C. and one N.O.	See "Figure: SI-LS83PBx Switching Diagrams" on page 4
SI-LS83PBE		Two N.C.	
SI-LS83RC10D	Roller	One N.C. and one N.O.	See "Figure: SI-LS83RC10x Switching Diagrams" on page 5
SI-LS83RC10E		Two N.C.	
SI-LS83LA18D	Spindle-mount lever (18 mm roller)	One N.C. and one N.O.	See "Figure: SI-LS83LA18x Switching Diagrams" on page 6
SI-LS83LA18E		Two N.C.	
SI-LS83LE13D	Lever (13 mm roller)	One N.C. and one N.O.	See "Figure: SI-LS83LE13x Switching Diagrams" on page 7
SI-LS83LE13E		Two N.C.	

Important... Read this before proceeding!

The user is responsible for satisfying all local, state, and national laws, rules, codes, and regulations relating to the use of this product and its application. Banner Engineering Corp. has made every effort to provide complete application, installation, operation, and maintenance instructions. Please contact a Banner Applications Engineer with any questions regarding this product.

The user is responsible for making sure that all machine operators, maintenance personnel, electricians, and supervisors are thoroughly familiar with and understand all instructions regarding the installation, maintenance, and use of this product, and with the machinery it controls. The user and any personnel involved with the installation and use of this product must be thoroughly familiar with all applicable standards, some of which are listed within the specifications. Banner Engineering Corp. makes no claim regarding a specific recommendation of any organization, the accuracy or effectiveness of any information provided, or the appropriateness of the provided information for a specific application.

Overview

Use the SI-LS83 Series Safety Limit (Position) Switch to monitor the position of a guard to detect the movement, opening, or removal. A "guard" can be a gate, door, cover, panel, barrier or other physical means that separates an individual from a hazard. The SI-LS83 Switch will issue a signal to the machine control system to prevent or stop (halt) hazardous situations when the guard is not in the proper position. The SI-LS83 Switch is designed for non-locking guarding applications, unless another means of locking is provided.

The SI-LS83 Series Safety Limit (Position) Switch is considered a Type 1 interlocking device per ISO 14119 that is mechanically actuated by an uncoded rotary or linear actuator (cam or "dog") typically mounted on or part of the guard. A variety of actuating systems are available: plunger (dome), roller plunger, spindle-mount lever roller, and lever.

© Banner Engineering Corp.

ПРОМЭЛЕКТРОНИКА/ sales@prom-elec.com

Installation Requirements

The following general requirements and considerations apply to the installation of interlocked gates and guards for the purpose of safeguarding. In addition, the user must refer to the relevant regulations and comply with all necessary requirements. See ANSI B11.19, or ISO 14119 and ISO 14120, or the appropriate standard.

Hazards guarded by the interlocked guard must be prevented from operating until the guard is closed; a stop command must be issued to the guarded machine if the guard opens while the hazard is present. Closing the guard must not, by itself, initiate hazardous motion; a separate procedure must be required to initiate the motion.

Locate the guard an adequate distance from the danger zone (so the hazard has time to stop before the guard is opened sufficiently to provide access to the hazard). Guard locking or supplemental safeguarding must be used if the overall stopping time of the machine or the time to remove the hazard is greater than the time to access the guarded area. The guard must open either laterally or away from the hazard, not into the safeguarded area. The guard also should not be able to close by itself and activate the interlocking circuitry. The installation must prevent personnel from reaching over, under, around or through the guard to access the hazard. Any openings due to positioning, movement, or misalignment in the guard must not allow access to the hazard—see ANSI B11.19, ISO 13855, ISO 13857, or the appropriate standard.

The guard must be strong enough and designed to protect personnel and contain hazards within the guarded area that can be ejected, dropped, or emitted by the machine. Mount them securely so that their physical position cannot shift, using reliable fasteners that require a tool to remove. Mounting slots in the housing, if provided, are for initial adjustment only; final mounting holes (round) must be used for permanent location. The switches, actuating systems, and actuators must not be used as a mechanical or end-of-travel stop.

The normally closed safety contacts are of a "positive-opening" design. Positive-opening operation causes the contacts to be forced open, without the use of springs, when the actuator is disengaged or moved from its home position. In addition, the switch(es) must be mounted in a "positive mode", to move/disengage the actuating system and actuator from its home position and open the normally closed contact, when the guard opens.

See *Mechanical Installation*, *Electrical Installation*, *Switching Diagrams*, and *Specifications* for additional information.

Design and install the safety switches and actuators so that they cannot be easily defeated. Measures to minimize defeat (bypassing) of interlocking safety switches include:

- Minimizing motivation for defeating interlocking by providing training, supervision, and efficient means for machine setup/adjustment, operation and maintenance
- Limiting accessibility to the interlocking device, such as mounting out of reach, mounting behind a physical obstruction, mounting in a concealed position
- Preventing actuation by readily available objects or tools
- Preventing the switch or the actuator from being disassembled or repositioned that compromises the safety function. (for example, welding, one-way screws, riveting)
- Control system monitoring of cyclic switch functioning and redundant means of interlocking
- Using hardware that requires a tool to remove that is not readily available.

WARNING:

- **Properly Install the Interlocked Guards**
- Failure to follow these guidelines could result in serious injury or death.
- At a minimum, the interlocked guard must prevent hazards when not fully closed and must prevent access to the hazards through any opening in the guard.
- Install the safety switches and actuators so they cannot be easily defeated and are not used as a mechanical or end-of-travel stop. Mount at least one switch in a positive mode and verify it opens the normally closed contact when the guard opens.
- The user must refer to the relevant regulations and comply with all necessary requirements. See ANSI B11.19, or ISO 14119 and ISO 14120, or the appropriate standard.

CAUTION:

- **Do not use the safety switch as a mechanical or end-of-travel stop.**
- Catastrophic damage can cause the safety switch to fail in an unsafe manner (that is, loss of the switching action).
- Limit the movement or rotation of the guard to prevent damage to the safety switch or the actuator.

Pass-Through Hazards and Perimeter Guarding

A pass-through hazard is associated with applications where personnel may pass through a safeguard (which issues a stop command to remove the hazard), and then continues into the guarded area, such as in perimeter guarding. Subsequently, their presence is no longer detected, and the related danger becomes the unexpected start or restart of the machine while personnel are within the guarded area.

Eliminate or reduce pass-through hazards whenever possible—see ANSI B11.19 and ANSI B11.20 or ISO 11161. One method to mitigate the risk is to ensure that once tripped, either the safeguarding device, the safety related part of the control system, or the guarded machine's MSCs/MPCEs will latch in an OFF condition. The latch must require a deliberate manual action to reset that is separate from the normal means of machine cycle initiation.

© Banner Engineering Corp. All rights reserved.

This method relies upon the location of the reset switch as well as safe work practices and procedures to prevent an unexpected start or restart of the guarded machine. All reset switches must be:

- Outside the guarded area
- Located to allow the switch operator a full, unobstructed view of the entire guarded area while the reset is performed
- Out of reach from within the guarded area
- Protected against unauthorized or inadvertent operation (such as through the use of rings or guards)

If any areas within the guarded area are not visible from the reset switch, additional safeguarding must be provided.

WARNING:

- **Perimeter guarding applications**
- Failure to observe this warning could result in serious injury or death.
- Use lockout/tagout procedures per ANSI Z244.1, or use additional safeguarding as described by ANSI B11.19 safety requirements or other applicable standards if a passthrough hazard cannot be eliminated or reduced to an acceptable level of risk.

Mechanical Installation

IMPORTANT: Install a safety switch in a manner that discourages tampering or defeat. Mount switches to prevent bypassing of the switching function at the terminal chamber or Quick Disconnect (QD). A switch and its actuator must never be used as a mechanical stop. Overtravel may cause damage to switch.

All mounting hardware is supplied by the user. Fasteners must be of sufficient strength to guard against breakage. Use of permanent fasteners or locking hardware is recommended to prevent the loosening or displacement of the actuator and the switch body. The mounting holes in the switch body accept M5 screws.

Safety limit switches and their actuators (cams, dogs, etc.) must be mounted such that the position cannot be changed after installation/adjustment. Mount the switch securely on a solid, stationary surface that can accommodate the forces of actuator movement. The loosening of mounting hardware must be prevented (for example, lock washers, thread-locking compound). The use of slots should only be used for initial positioning. Pins, dowels, and splines can be used to prevent movement of the switch and the actuator (cam).

The safety limit switch must be installed to prevent false or unintended actuation and intentional defeat.

Safety limit switches should be located in such a manner that allows access for functional checks, maintenance, and service or replacement. The installation should provide suitable clearances, be readily accessible, and allow access to the actuator system (for example, roller lever) and switch body covers.

Safety limit switches should not be used in environments that subject the switch, the actuating system, or the actuator (cam) to extreme temperatures and vibration/shock or where excessive moisture (water, oils, coolants, etc.) or machining chips/swarf and dust can be reasonably expected.

The actuating system (all models except SI-LS83PBx) can be rotated to any of four positions in 90° increments. To reposition the actuating system, follow these steps:

1. With the actuating system at 0°, loosen the four screws holding the actuating system to the switch body.
2. Lift the actuating system away from the spring and gasket and rotate it to the desired position.
3. Press the actuating system down firmly to compress the spring, and re-fasten the four screws (tightening to 0.3 to 0.4 N·m of torque).
4. Ensure that the gasket stays in place to maintain the environmental ratings.

Actuating System and Actuator (Cam) Considerations

Actuating systems and actuators must be installed per the dimensioning diagram and the movement of the actuating system must remain within the specified operating range. The slope of the actuator (cam) must not be greater than specified and the construction material must be of sufficient hardness to ensure proper operation for the life time of the machine.

The actuating system must travel the required distance to operate the positive opening normally closed contacts, but not exceed the maximum travel listed on the switching diagrams. The installation must account for any mechanical inaccuracies, tolerance issues, wear, misalignment, etc. in the actuator (cam) and the actuating system of the switch by allowing sufficient post-travel after the positive opening point.

When used in a safety application, the actuating system must be operated by direct mechanical action (positive mode) of the actuator (cam) and the guard that engages the direct positive opening of the normally closed safety contacts. Non-direct mechanical action (negative mode) that relies on spring force should only be used in conjunction with a Type 1 or Type 2 (key/tongue actuated) interlocking switch mounted in the direct action positive mode as a redundant, complementary monitoring channel (see "Figure: Connect two redundant safety switches per interlock guard to an appropriate 2-channel input safety module" on page 8).

Actuators (cams) must be designed and installed to:

© Banner Engineering Corp. All rights reserved.

- Ensure that the limit switch contacts are operated long enough to ensure that a proper signal is transmitted to operate connected devices or safety modules and controllers
- Ensure the actuator is not operated beyond its overtravel limits
- Ensure that the actuator does not receive severe impact from fast-moving cams
- Ensure the actuator does not snap back into to position by an abrupt release
- Not use additional or modified actuators

Do not use the switch, actuating system, or the actuator (cam) as a mechanical end-of-travel stop. If you change the position of the actuator, ensure the correct reassembly for proper operation.

Switching Diagrams

SI-LS83PBx Switching Diagrams

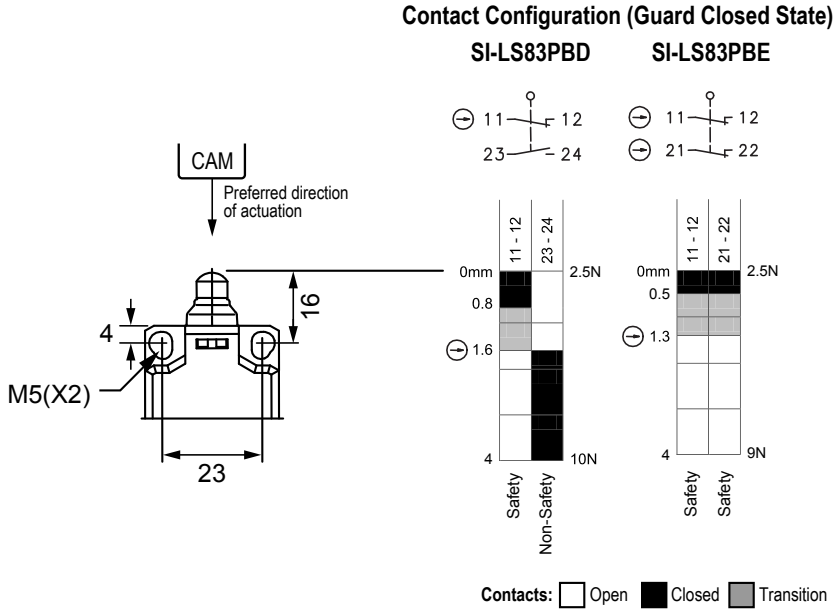

Switching Diagram tolerances:
Operating point ± 0.25 mm
Operating force ± 10%

Guard closed (home position) is at 0 mm when mounted in a positive mode. Not to scale.

Maximum allowable travel varies by model and is listed at bottom of switching diagram (minus operating tolerance).

Installation must ensure sufficient travel for positive opening of safety contacts and account for any mechanical tolerances.

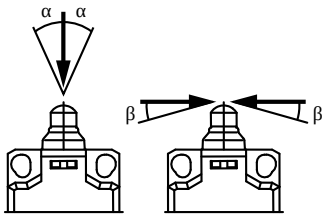

	Max. Approach speed vs. Max. Approach angle				
	0.1 m/s	0.5 m/s	1 m/s	2 m/s	5 m/s
α	30°	5°	-	-	-
β	20°	20°	10°	5°	-
Preferable direction of actuation is parallel to the plunger axis (α°). Exceeding specified approach angle or speed can reduce life expectancy.					

NOTE: This symbol ⊖ for a positive-opening safety contact (IEC 60947-5-1) is used in the switching diagram to identify the point in actuator travel where the normally closed safety contact is fully open.

© Banner Engineering Corp. All rights reserved.

SI-LS83RC10x Switching Diagrams

Contact Configuration (Guard Closed State)

SI-LS83RC10D **SI-LS83RC10E**

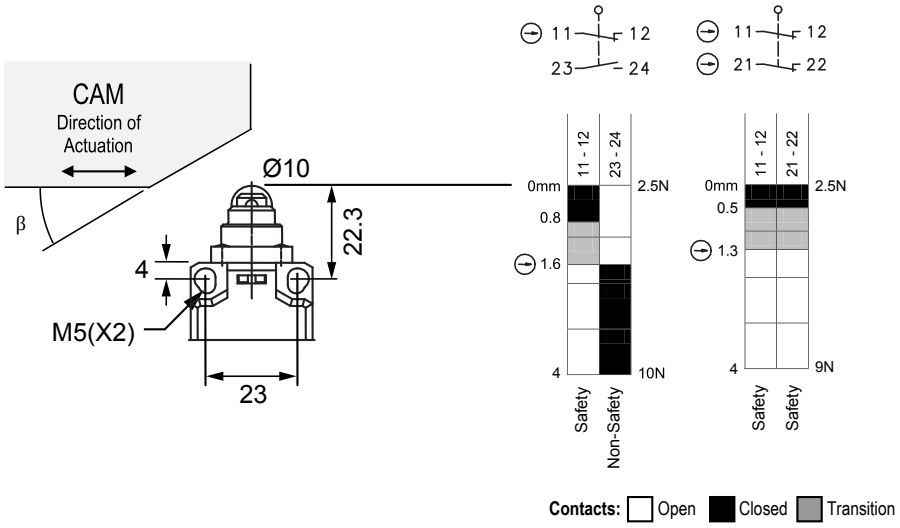

Switching Diagram tolerances:
Operating point ± 0.25 mm
Operating force ± 10%

Guard closed (home position) is at 0 mm when mounted in a positive mode. Not to scale.

Maximum allowable travel varies by model and is listed at bottom of switching diagram (minus operating tolerance).

Installation must ensure sufficient travel for positive opening of safety contacts and account for any mechanical tolerances.

Actuating system can be removed and reposition/rotated by 90°. Ensure all screws are properly re-installed.

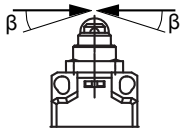

	Max. Approach speed vs. Max. Approach angle				
	0.1 m/s	0.5 m/s	1 m/s	2 m/s	5 m/s
β	30°	30°	20°	10°	5 °
Direction of actuation is perpendicular to the actuating system axis. Exceeding specified approach angle or speed can reduce life expectancy.					

NOTE: This symbol ⊕ for a positive-opening safety contact (IEC 60947-5-1) is used in the switching diagram to identify the point in actuator travel where the normally closed safety contact is fully open.

© Banner Engineering Corp. All rights reserved.

SI-LS83LA18x Switching Diagrams

Contact Configuration (Guard Closed State)

SI-LS83LA18D **SI-LS83LA18E**

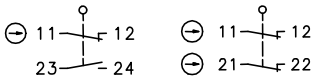

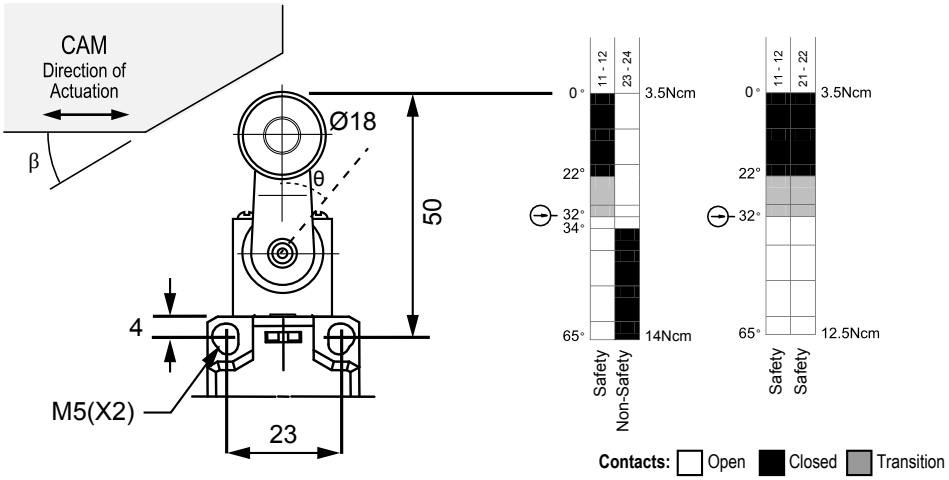

Guard closed (home position) is at 0° when mounted in a positive mode. Not to scale.

Maximum allowable travel varies by model and is listed at bottom of switching diagram (minus operating tolerance). Switching Angles (θ) are measured with actuating system in vertical position (as drawn) and are applicable both left and right movement.

Installation must ensure sufficient travel for positive opening of safety contacts and account for any mechanical tolerances.

Actuating system can be removed and reposition/rotated by 90° increments. Ensure all screws are properly re-installed.

Switching Diagram tolerances:
Operating point ± 3.5 °
Operating torque ± 10%

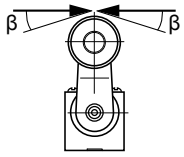

	Max. Approach speed vs. Max. Approach angle				
	0.1 m/s	0.5 m/s	1 m/s	2 m/s	5 m/s
β	45°	45°	45°	40°	30°
Direction of actuation is perpendicular to the actuating system axis. Exceeding specified approach angle or speed can reduce life expectancy.					

NOTE: This symbol ⊖ for a positive-opening safety contact (IEC 60947-5-1) is used in the switching diagram to identify the point in actuator travel where the normally closed safety contact is fully open.

© Banner Engineering Corp. All rights reserved.

SI-LS83LE13x Switching Diagrams

Contact Configuration (Guard Closed State)

SI-LS83LE13D **SI-LS83LE13E**

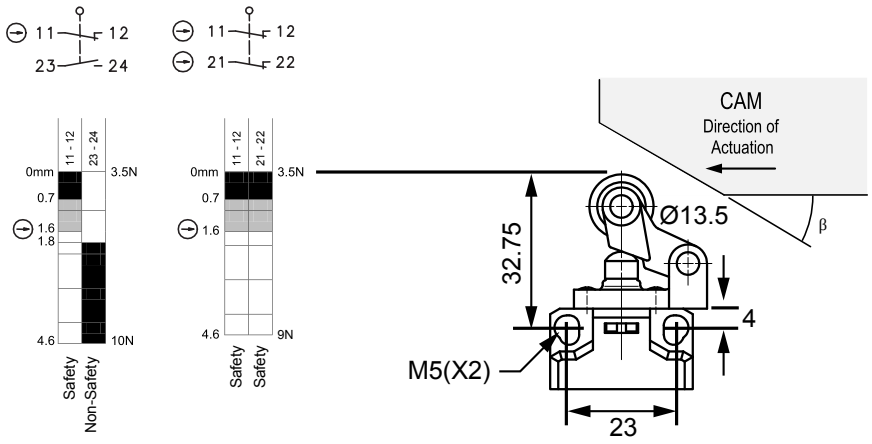

Contacts: Open Closed Transition

Switching Diagram tolerances:
Operating point ± 0.25 mm
Operating force ± 10%

Guard closed (home position) is at 0 mm when mounted in a positive mode. Note to scale.

Maximum allowable travel varies by model and is listed at bottom of switching diagram (minus operating tolerance).

Installation must ensure sufficient travel for positive opening of safety contacts and account for any mechanical tolerances.

The actuator can only approach from the hinge side. Actuator can be removed and reposition/rotated by 90° increments. Ensure all screws are properly re-installed.

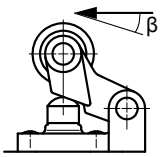

	Max. Approach speed vs. Max. Approach angle				
	0.1 m/s	0.5 m/s	1 m/s	2 m/s	5 m/s
β	20°	20°	10°	–	–

Direction of actuation is perpendicular to the actuating system axis and only from the hinge side of the actuator. Exceeding specified approach angle or speed can reduce life expectancy.

NOTE: This symbol ⊖ for a positive-opening safety contact (IEC 60947-5-1) is used in the switching diagram to identify the point in actuator travel where the normally closed safety contact is fully open.

Electrical Installation

WARNING:

- **Risk of electric shock**
- Use extreme caution to avoid electrical shock. Serious injury or death could result.
- Always disconnect power from the safety system (for example, device, module, interfacing, etc.), guarded machine, and/or the machine being controlled before making any connections or replacing any component. Lockout/tagout procedures might be required. Refer to OSHA 29CFR1910.147, ANSI Z244-1, or the applicable standard for controlling hazardous energy.
- Make no more connections to the device or system than are described in this manual. Electrical installation and wiring must be made by a Qualified Person[1] and must comply with the applicable electrical standards

[1] A person who, by possession of a recognized degree or certificate of professional training, or who, by extensive knowledge, training and experience, has successfully demonstrated the ability to solve problems relating to the subject matter and work.

© Banner Engineering Corp. All rights reserved.

and wiring codes, such as the NEC (National Electrical Code), NFPA 79, or IEC 60204-1, and all applicable local standards and codes.

Access to the Wiring Chamber

Access the wiring chamber by using a flat-bladed screwdriver to pry open a hinged cover door. A single M16 × 1.5 threaded port allows wiring to be routed via conduit or a cable gland. A conduit adapter is supplied to convert the M16 × 1.5 thread to ½" × 14 NPT. An accessory cable gland (SI-QS-CGM16) that fits the M16 × 1.5 thread is available, see "Accessories" on page 11.

Accessing the Wiring Chamber

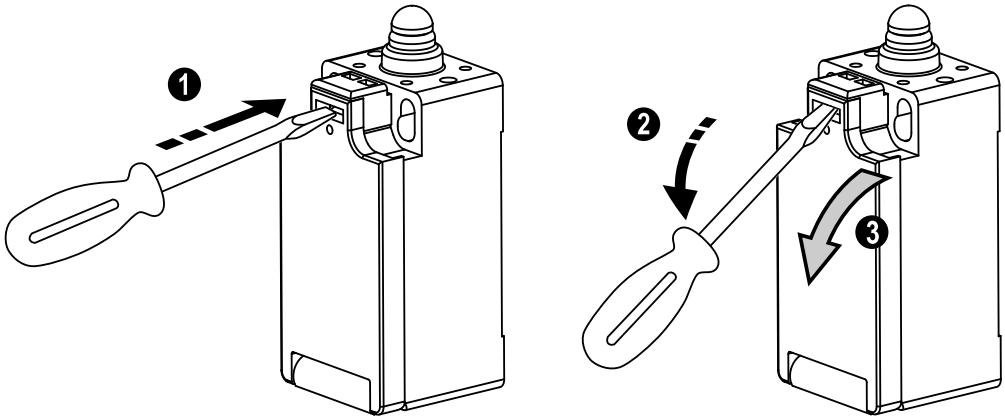

Connection to a Machine

Perform a risk assessment to determine the appropriate level of safety circuit performance (integrity) and the means of interfacing the switch(es) with the machine control circuit. While Banner Engineering always recommends the highest level of safety in any application, the user is responsible to safely install, operate, and maintain each safety system and comply with all relevant laws and regulations.

To ensure the highest level of reliability (Control Reliable or Category 4, for example), wire the contacts from each of two individual safety switches per interlock guard in a dual channel hookup. At a minimum, one of these two contacts must be the positively-driven normally closed safety contact (S1 in "Figure: Connect two redundant safety switches per interlock guard to an appropriate 2-channel input safety module" on page 8).

Depending on the application, the redundant switch contact will be a positively-driven normally closed safety contact (if mounted in a positive mode), or a normally open monitoring (non-safety) contact held closed by the cam on the guard (if mounted in a negative mode). In either scenario, the dual channel connection is monitored by a safety module (for example, ES-FA-9AA), safety controller (for example, SC10 or SC/XS26), or the safety-related part of the machine control that complies with the required level of safety performance.

Connect two redundant safety switches per interlock guard to an appropriate 2-channel input safety module

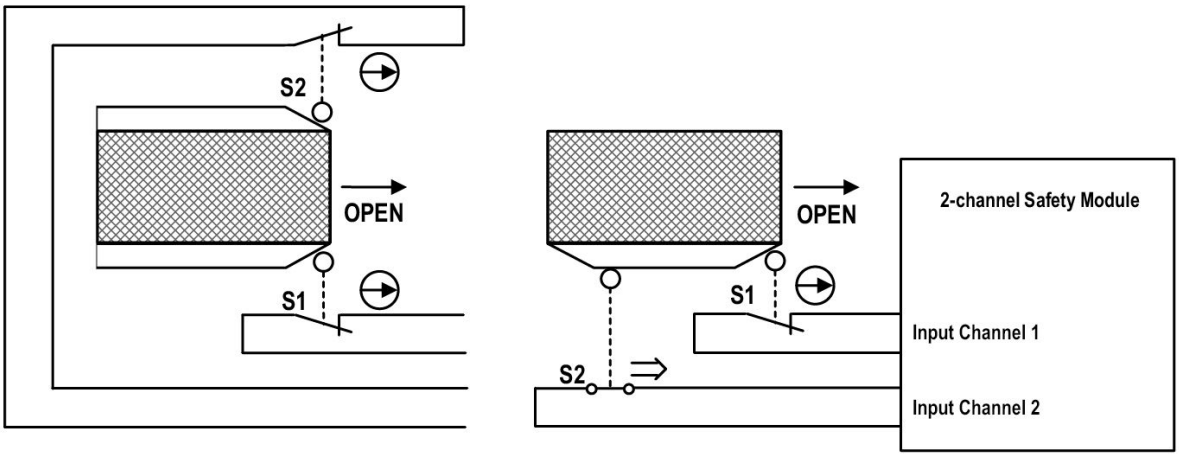

- Normally closed safety contacts (11/12 or 21/22) are monitored by the safety module when both switches are mounted in the positive mode (that is, opening the guard actuates S1 and S2; circuit on left).

© Banner Engineering Corp. All rights reserved.

- One normally closed safety contact (11/12 or 21/22) from the switch mounted in the positive mode (S1) and one normally open contact (23/24 or 33/34) from the switch mounted in the negative mode (S2) are monitored by the safety module (that is, opening the guard actuates S1 and releases S2; circuit on the right).
- Refer to the installation instructions provided with the safety module or safety controller for information regarding the interface to the machine stop control elements.

Two functions of the safety module or safety controller are:

1. To provide a means of monitoring the contacts of both safety switches for contact failure, and to prevent the machine from restarting if either switch fails.
2. To provide a reset routine after closing the guard and returning the safety contacts to their closed position. This prevents the controlled machinery from restarting by simply closing the guard (reinserting the key/actuator, for example). This necessary reset function is required by ANSI B11.0, NFPA 79, and IEC 60204-1 machine safety standards.



WARNING:

- **Ensure the safety circuit integrity**
- The safety circuit integrity level is affected by the design and installation of the safety devices and the means of interfacing with those devices.
- Perform a risk assessment to determine the appropriate safety circuit integrity level or category to ensure the expected risk reduction is achieved and all applicable regulations and standards are in compliance (see ANSI B11.0 and ANSI B11.19, ISO 12100 and ISO13849-1 or the applicable standards).



CAUTION:

- **Safety switch installation**
- Using only one safety switch per interlock guard is not recommended.
- Use two safety switches for each interlock guard to achieve control reliability or Safety Category 4 (per ISO 13849-1) of a machine stop circuit.
- In addition, normally-closed (N.C.) safety contacts from each of the two safety switches should be connected to the two separate inputs of a two-channel safety monitoring device. This is required to monitor for safety switch contact failure and to provide the necessary reset routine, as required by IEC 60204-1 and NFPA 79 machine safety standards.

Monitoring Series-Connected Safety Switches

When monitoring the position of several guards with a single safety module or controller, the contacts of the corresponding pole of each switch must be connected together in series. Never connect the contacts of multiple switches in parallel. Such a parallel connection can defeat the switch contact monitoring ability of the module and could create an unsafe condition.

When multiple safety switches are series connected, the failure of one switch in the system may be masked or not be detected at all. The following two scenarios assume two positive-opening safety switches on each guard, both connected in series to switches of a second guard (dual channel hookup) and monitored by a safety module or safety controller:

- **Masking of a failure**—If a guard is opened but one switch fails to open, the redundant safety switch on that guard opens and a protective (safety) stop occurs. If the faulty guard is then closed, the module/controller will not reset because one channel did not open, thus complying with the required fault detection. However, if a second "good" guard is cycled (opening and then closing both of the channels), the failure appears to be corrected (input requirements satisfied) and the module/controller allows a reset. This system is no longer redundant and, if the second switch fails, may result in an unsafe condition (the accumulation of faults resulting in loss of the safety function).
- **Non-detection of a failure**—If a functional guard is opened, both channels open and the module/controller initiates a protective (safety) stop. If a guard with a faulty safety switch is then opened and closed before the good guard is re-closed, the faulty switch is not detected. The system is no longer redundant and may result in a loss of safety if the redundant switch fails to open when needed.

The system in either scenario does not inherently comply with the safety standard requirements of detecting a single fault and preventing the next cycle (not a Category 4 application per ISO 13849-1). In multiple-guard systems using series-connected safety switches, it is important to periodically check the functional integrity of each interlocked guard individually. Open and close each guard separately while verifying that the machine properly responds. **Operators, maintenance personnel, and others associated with the operation of the machine must be trained to recognize failures and be instructed to correct them immediately.**



WARNING:

- **Connecting safety switches in series**
- Monitoring multiple guards with a series connection of multiple safety interlock switches is not a Safety Category 4 Application (per ISO 13849-1). A single failure can be masked or not detected at all. The loss of a safety stop signal or an inappropriate reset can lead to serious injury or death.
- When such a configuration is used, procedures must be performed regularly to verify proper operation of each switch. Correct all failures immediately (for example, immediately replace a failed switch).

© Banner Engineering Corp. All rights reserved.

SI-LS83 Specifications

UL/CSA Contact Rating

A300 (same polarity): 3 A at 240 V AC, 6 A at 120 V AC

Q300: 0.27 A at 240 V DC, 0.55 A at 120 V DC

European Rating, Utilization categories (IEC/EN 90497-5-1):

U_i = 250 V AC, I_{th} = 10 A AC/2.5 A DC, AC15 U_e/I_e 240 V/3 A, 120 V/6 A; DC-13 U_e/I_e 250 V/0.27 A, 125 V/0.55 A

Electrical Protection Class

II, totally insulated

Contact Function

Slow-action make and break contacts. See Switching Diagrams.

Switching Frequency

≤ 100 per minute

Contact Material

Silver-nickel alloy

Mechanical Life

3×10^6 operations

B10d

6×10^6 cycles (N.C. contact) at DC-13; 24 V; I_{e2} = 0.2 A based on ISO 13849-1

Short Circuit Protection

Recommended external fusing or overload protection.

6 amp Slow Blow (gG)

Wire Connections

Screw terminals with pressure plates accept the following wire sizes. Ferrules are recommended for stranded wire.

Stranded and solid: 0.5 mm² (20 AWG) to 1.5 mm² (16 AWG) for one wire

Maximum Tightening Torque: 0.8 N·m

Cable Entry

One M16 × 1.5 threaded entrance. Adapter supplied to convert M16 × 1.5 to 1/2" - 14 NPT threaded

Construction

Enclosure: Thermoplastic, glass fiber reinforced (UL 94-V0)

Actuator:

SI-LS83PBx (Plunger): Thermoplastic
SI-LS83RC10x (10 mm Roller): Thermoplastic
SI-LS83LA18x (Spindle-mount Lever with 18 mm roller): Steel, Thermoplastic
SI-LS83LE13x (Lever with 13 mm roller): Thermoplastic

Environmental Rating

IP65 according to IEC/EN 60529

The degree of protection (IP code) specified applies solely to a properly closed cover and the use of an equivalent cable gland with adequate cable.

Altitude ≤ 2000 m

Operating Conditions

–30 °C to +80 °C (–22 °F to +176 °F)

Mounting

2 × M5 screws DIN 912 (on a flat and stiff surface)

Tightening torque: $M_d$max. = 1.5 N·m

Weight (approximate)

SI-LS83PBx: 0.04 kg

SI-LS83RC10x: 0.05 kg

SI-LS83LA18x: 0.07 kg

SI-LS83LE13x: 0.05 kg

Applicable Standards

VDE 0660 T100, DIN EN 60947-1, IEC 60947-1

VDE 0660 T200, DIN EN 60947-5-1, IEC 60947-5-1

DIN EN ISO 13849-1

Approvals

$_C$CSA$_{US}$ A300 Q300 (same polarity)

Certifications

Banner Engineering BV
Park Lane, Culliganlaan 2F bus 3
1831 Diegem, BELGIUM

Turck Banner LTD Blenheim House
Blenheim Court
Wickford, Essex SS11 8YT
GREAT BRITAIN

SI-LS83 Dimensions

All measurements are listed in millimeters [inches], unless noted otherwise.

© Banner Engineering Corp. All rights reserved.

SI-LS83PBx

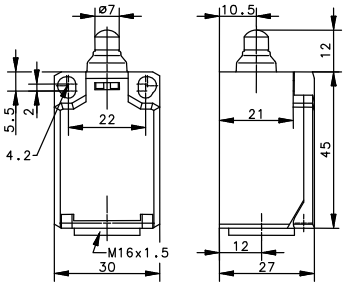

SI-LS83LA18x

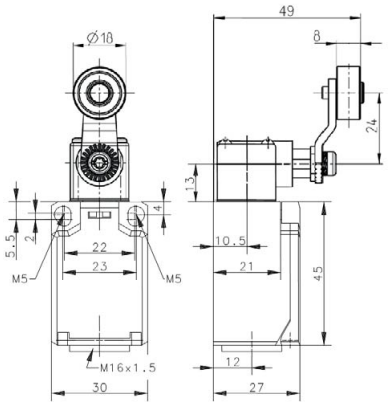

SI-LS83RC10x

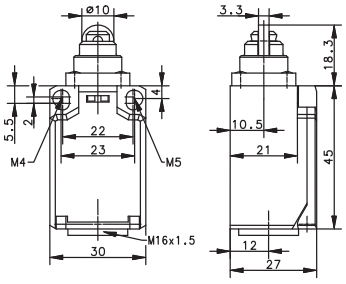

SI-LS83LE13x

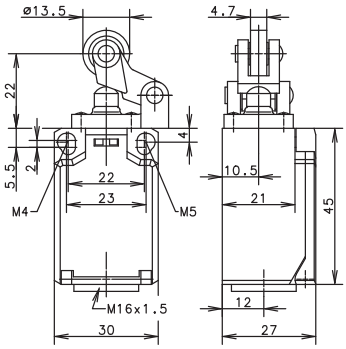

Accessories

Cable Glands

Model	Size	For Cable Diameter	Dimensions	Used With
SI-QS-CGM16	M16 × 1.5 Plastic	3.0 to 8.0 mm (0.12 to 0.31 inches)	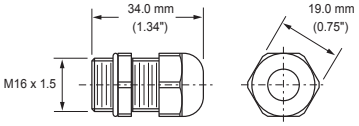	SI-LS83 Safety Interlock Switch SI-QS75 Safety Interlock Switch

Conduit Adapters

Model	Size	Thread Conversion	Dimensions	Used With
SI-QS-M16	½ in-14 NPT Plastic	M16 × 1.5 to ½ in-14 NPT	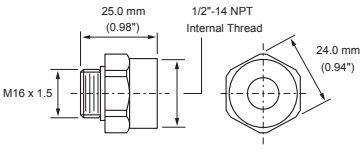	SI-LS83 Safety Interlock Switch SI-QS75 Safety Interlock Switch

One conduit adapter is supplied with each switch.

© Banner Engineering Corp. All rights reserved.

Product Support and Maintenance

Checkout

At switch installation or replacement and at machine set up, a *Designated Person*[1] must test each switch for proper machine shutdown response and check the switch(es) and installation for proper operation, physical damage, mounting (looseness), and excessive environmental contamination. This must also take place on a periodic schedule determined by the user, based on the severity of the operating environment and the frequency of switch actuations. Adjust, repair, or replace components as needed. If inspection reveals contamination on the switch, thoroughly clean the switch and eliminate the cause of the contamination. Replace the switch and/or appropriate components when any parts or assemblies are damaged, broken, deformed, or badly worn; or if the electrical/mechanical specifications (for the environment and operating conditions) have been exceeded. **Always test the control system for proper functioning** under machine control conditions after performing maintenance, replacing the switch, or replacing any component of the switch.

Additional items that should be included in the checkout and/or regularly scheduled maintenance of a safety limit switch, actuating system, and actuator (cam) are:

- Verify proper positioning of switch, actuating system (for example, roller lever), and cam or dog
- Verify correct switching function (actuator system has free movement and within switching distance specifications)
- Correct any misalignment or overrun between the actuator and the actuator system

Repairs

Do not attempt any repairs to the safety interlocking switch. It contains no field-replaceable components. Return it to Banner Engineering for warranty repair or replacement.

Contact Banner Factory Application Engineering. They will attempt to troubleshoot the system from your description of the problem. If they conclude that a component is defective, they will issue a return merchandise authorization (RMA) number for your paperwork, and give you the proper shipping address.

IMPORTANT: Pack the safety switches carefully. **Damage that occurs in return shipping is not covered by warranty.**

Standards and Regulations

The list of standards below is included as a convenience for users of this Banner device. Inclusion of the standards below does not imply that the device complies specifically with any standard, other than those specified in the Specifications section of this manual.

US Application Standards

ANSI B11.0 Safety of Machinery

ANSI B11.19 Performance Requirements for Risk Reduction Measures: Safeguarding and Other Means of Reducing Risk

NFPA 79 Electrical Standard for Industrial Machinery

International/European Standards

ISO 12100 Safety of Machinery – General Principles for Design – Risk Assessment and Risk Reduction

ISO 14119 (EN 1088) Interlocking Devices Associated with Guards – Principles for Design and Selection

ISO 14120 Safety of machinery – Guards – General requirements for the design and construction of fixed and movable guards

ISO 13857 Safety of Machinery – Safety Distances to Prevent Hazard Zones Being Reached

IEC 62061 Safety of Machinery – Functional Safety of Safety-Related Control Systems

ISO 13849-1 Safety of Machinery – Safety-Related Parts of Control Systems – Part 1: General Principles for Design

EN 60204-1 Electrical Equipment of Machines Part 1: General Requirements

IEC 60947-1 Low Voltage Switchgear – General Rules

IEC 60947-5-1 Low Voltage Switchgear – Electromechanical Control Circuit Devices

IEC 60529 Degrees of Protection Provided by Enclosures

IEC 61508 Functional Safety of Electrical/Electronic/Programmable Electronic Safety-Related Systems

[1] A *Designated Person* is identified in writing by the employer as being appropriately trained to perform a specified checkout procedure.

© Banner Engineering Corp. All rights reserved.

EU/UK Declaration of Conformity (DoC)

Banner Engineering Corp. herewith declares that these products are in conformity with the provisions of the listed directives and all essential health and safety requirements have been met. For the complete DoC, please go to www.bannerengineering.com.

Product	Directive
SI-LS83 Series Safety Limit (Position) Switch	EU: Low Voltage Directive 2014/35/EU
	UKCA: Electrical Equipment (Safety) Regulations 2016

Representative in EU: Spiros Lachandidis, Managing Director, **Banner Engineering BV** Park Lane | Culliganlaan 2F bus 3 | 1831 Diegem, BELGIUM

Representative in UK: Tony Coghlan, Managing Director, **Turck Banner LTD** Blenheim House | Blenheim Court | Wickford, Essex SS11 8YT | Great Britain

Banner Engineering Corp Limited Warranty

Banner Engineering Corp. warrants its products to be free from defects in material and workmanship for one year following the date of shipment. Banner Engineering Corp. will repair or replace, free of charge, any product of its manufacture which, at the time it is returned to the factory, is found to have been defective during the warranty period. This warranty does not cover damage or liability for misuse, abuse, or the improper application or installation of the Banner product.

THIS LIMITED WARRANTY IS EXCLUSIVE AND IN LIEU OF ALL OTHER WARRANTIES WHETHER EXPRESS OR IMPLIED (INCLUDING, WITHOUT LIMITATION, ANY WARRANTY OF MERCHANTABILITY OR FITNESS FOR A PARTICULAR PURPOSE), AND WHETHER ARISING UNDER COURSE OF PERFORMANCE, COURSE OF DEALING OR TRADE USAGE.

This Warranty is exclusive and limited to repair or, at the discretion of Banner Engineering Corp., replacement. **IN NO EVENT SHALL BANNER ENGINEERING CORP. BE LIABLE TO BUYER OR ANY OTHER PERSON OR ENTITY FOR ANY EXTRA COSTS, EXPENSES, LOSSES, LOSS OF PROFITS, OR ANY INCIDENTAL, CONSEQUENTIAL OR SPECIAL DAMAGES RESULTING FROM ANY PRODUCT DEFECT OR FROM THE USE OR INABILITY TO USE THE PRODUCT, WHETHER ARISING IN CONTRACT OR WARRANTY, STATUTE, TORT, STRICT LIABILITY, NEGLIGENCE, OR OTHERWISE.**

Banner Engineering Corp. reserves the right to change, modify or improve the design of the product without assuming any obligations or liabilities relating to any product previously manufactured by Banner Engineering Corp. Any misuse, abuse, or improper application or installation of this product or use of the product for personal protection applications when the product is identified as not intended for such purposes will void the product warranty. Any modifications to this product without prior express approval by Banner Engineering Corp will void the product warranties. All specifications published in this document are subject to change; Banner reserves the right to modify product specifications or update documentation at any time. Specifications and product information in English supersede that which is provided in any other language. For the most recent version of any documentation, refer to: www.bannerengineering.com.

For patent information, see www.bannerengineering.com/patents.

Document title: SI-LS83 Series Safety Limit Switch Instruction Manual
Part number: 182191
Revision: C
Original Instructions
© Banner Engineering Corp. All rights reserved.

182191

© Banner Engineering Corp. All rights reserved.