DXM1200-Bx Wireless Controller Product Manual

Original Instructions
p/n: 216539 Rev. N
18-Mar-26
© Banner Engineering Corp. All rights reserved. www.bannerengineering.com

ПРОМЭЛЕКТРОНИКА/ sales@prom-elec.com

Contents

Chapter 1 Overview 5
DXM1200-B2 System Overview 5
DXM1200-B2 Models 7
DXM Hardware Configuration Overview 7
DXM1200 Automation Protocols 8
DXM1200 Modbus Overview 8
DXM Configuration Software Overview 10
DXM1200E-B1 System Overview 10
DXM1200E-B1 Models 12
Specifications 13
Radio Specifications for Performance and MultiHop (500 mW) 13
RS-485 Communication Specifications 13
DXM1200-B1 and DXM1200E-B1 Specifications 13
DXM1200-B2 Specifications 14
Environmental Specifications (DXM1200) 15
DXM1200E-B1 Dimensions 15
DXM1200-B2 Dimensions 16

Chapter 2 Quick Start Guide 17
Device Setup 17
Apply Power to the DXM1200-Bx Controller 17
Binding and Conducting a Site Survey with the ISM Radio 19
Set a Static IP Address 21
Configuration Instructions 22
Configuring the DXM1200-Bx Controller 22
Connect the DXM1200 to the Software 22
Configuration Example: Reading Registers on a Modbus Server Device 22

Chapter 3 ISM Radio Board (ID 1) 26
DIP Switches for the MultiHop Radio 26
Application Mode 27
Baud Rate and Parity 27
Disable Serial 27
Transmit Power Levels/Frame Size 27
Modbus Registers for the MultiHop Radio Board Module 27
DIP Switch Settings for the Performance Gateway Radio Module 28
Modbus Registers for the Performance Gateway Radio Module 28
Alternative Modbus Register Organization 29

Chapter 4 DXM1200 Processor Connections 33
DIP Switch Settings for the Base Board 34
Ethernet 35
USB 35
Internal Local Registers (ID 199) for the DXM700, DXM1000, and DXM1200 35
Modbus RTU Client 38

Chapter 5 Cellular Modem Boards 40
Cellular Modem Board for LTE 40
Cellular Power Requirements 40
Using the DXM Cellular Modem 40
Activating a Cellular Modem 40

Chapter 6 LCD and Menu System 46
Registers 46
Push 47
ISM Radio 47
System Config 48
ISM Radio 48
Ethernet 49
LCD Contrast 49
Reset 49
System Info 49
Display Lock 50
DXM1200-Bx Modbus Registers for the LCD (Modbus ID 201) 50

© Banner Engineering Corp. All rights reserved. www.bannerengineering.com

Chapter 7 Working with Modbus Devices 51
Assigning Modbus IDs 51
Modbus Operation 52
Wireless and Wired Devices 52
Modbus Communication Timeouts 52
MultiHop Networks vs DX80 Star Networks 53
Calculating the Communications Timeout for Battery-Powered MultiHop Radios 53
Calculating the Communication Timeout for 10–30 VDC MultiHop Radios 53
Adjusting the Receive Slots and Retry Count Parameters 53
Calculating the Communication Timeout for a DX80 Star Network 54
Modbus TCP Client 54

Configuration Instructions 22
Scheduler 55
Create a Weekly Event 55
Create a One-Time Event 56
Create a Holiday Event 56
Authentication Setup 56
Set the Controller to use Authentication 57
Controller Configuration Authentication 57
Register Flow and Configuration 58
Basic Approach to Configuration 58
Troubleshooting a Configuration 58
Saving and Loading Configuration Files 58
Uploading or Downloading Configuration Files 58
EtherNetIP Configuration 58
Configuring the Host PLC 59
Configuring the Controller 59
Define the Network Interface Settings 60
Configure your Ethernet Connection 60
Configure your Cellular Connection 61
Ethernet and Cellular Push Retries 61
Ethernet Push Retries 61
Cellular Push Retries 61
Event-Action Rule or Log File Push Retries 61

Chapter 9 PROFINET® 62
General Station Description Markup Language File 62
DXM PROFINET IO Data Model 62
Configure the DXM Controller for a PROFINET IO Connection 62
Save and Upload the Configuration File 25
Slots and Modules for the DXMR90-X1, DXM700, DXM1000, and DXM1200 PROFINET 63
Configuration Instructions 22
Install the GSD File 64
Change the Device IP Address 66
Change the Device Name 68

Chapter 10 Accessories 69

Chapter 11 Product Support and Maintenance 70
File System and Archive Process 70
Updating Your DXM Processor Firmware (Version 2 or Later) 71
Update the DXM Processor Firmware Using the DXM Configuration Software 71
Update Your Processor Firmware Using the BannerCDS Website 72
Clear the Password on DXM700-Bx, DXM1000-Bx, or DXM1200-Bx Models 72
DXM1200 Documentation 73
DXM Support Policy 73
Firmware Updates 73
Website Information 73
Feature Requests 73
Potential DXM Issues 74
DXM Security 74
Contact Us 74
FCC and ISED Certification for 900 MHz 74
FCC Notices 74
FCC and ISED Approved Antennas 74
FCC and ISED Certification for 2.4 GHz 75
FCC Notices 75
FCC and ISED Approved Antennas 76

© Banner Engineering Corp. All rights reserved. www.bannerengineering.com

Mexican Importer 76
ANATEL 76
Warnings 76
Banner Engineering Corp Limited Warranty 77

© Banner Engineering Corp. All rights reserved. www.bannerengineering.com

Chapter Contents

DXM1200-B2 System Overview 5
DXM1200E-B1 System Overview 10
Specifications 13

Chapter 1 Overview

DXM1200-B2 System Overview

Banner's DXM Logic Controller integrates Banner's wireless radio and cellular connectivity to provide a platform for the Industrial Internet of Things (IIoT).

Inputs and Outputs	Connectivity	Logic Controller	User Interface
N/A	Cellular	Action rules	LCD screen
	Sure Cross® radios	Programming language	LED indicators
	Ethernet	Scheduler	
	Internal micro USB	Push to the cloud	
	RS-485 Client	Data logging	

Modbus registers for internal local registers (Modbus ID 199)

Local Registers	Type	Description
1–845	32-bit integer	Local data registers
846–849	32-bit integer	Reset, Constant, Timer
851–900	32-bit non-volatile integer	Data flash, non-volatile
901–1000		Reserved for internal use
1001–5000	Floating point	Floating point registers, local data registers
5001–7000	32-bit integer	Local data registers
7001–8000	32-bit non-volatile integer	Data flash, non-volatile
> 10000		Read-only virtual registers, system-level data

© Banner Engineering Corp. All rights reserved.
www.bannerengineering.com

Connectivity—The DXM1200's wired and wireless connectivity options make it easy to share data between local and remote equipment. The cellular modem option eliminates the need for IT infrastructures to connect remote equipment for sensing and control to IIoT cloud services. The integrated Sure Cross® wireless radio enables Modbus connectivity to remote sensors, indicators, and control equipment. Connect directly to any PLC and/or SCADA system for easy integration into existing control or monitoring systems. Banner Industrial Wireless radios have two types of networks that can be used for creating applications and solving problems.

DXM1200-B2 Features



Wired Connectivity

Ethernet: Modbus/TCP (client/server) or Ethernet/IP

Field Bus: Modbus RS-485 Client

Wireless Connectivity

Sure Cross Wireless Radio: DX80 900 MHz, DX80 2.4 GHz, MultiHop 900 MHz, or MultiHop 2.4 GHz

Cellular modem: LTE-M (United States) or LTE-M/NB-IoT (outside the United States)

Wireless Radio Networks

Performance Wireless Radio Network

Star topology (point-to-point between Gateway and Node radios)

Battery-powered Node applications are more efficient in a star topology

Six inputs and six outputs maximum per radio

MultiHop Wireless Radio Network

Tree topology between one client radio and many repeater and/or server radios

Repeater radios add almost unlimited radio network range

Full Modbus sensor register data collection as well as typical local I/O, such as discrete, analog, etc.

Logic Controller—Program the DXM1200's logic controller using action rules and/or ScriptBasic language, which can execute concurrently. The control functions allow freedom when creating custom sensing and control sequences. The logic controller supports the Modbus protocol standards for data management, ensuring seamless integration with existing automation systems. File and LCD password protection is an option.

Register Mapping

Cyclical Read rules from wireless devices or local wired Modbus devices that include optional scaling, error conditions, and the ability to activate a read rule

Cyclical or change of state write rules to wireless devices or local wired Modbus devices with scaling

Modbus TCP Client read or write rules for external devices on the network

Action Rules

Thresholds (IF/THEN/ELSE) with timers, minimum on/off time, and logging options

Math/Logic Rules (arithmetic and bitwise operators)

Control Logic (logical operators and SR/T/D/JK flip flops)

Trending (multiple averaging filters)

Tracking (counts, on/off times)

Push data on conditions

Scheduler

Time/calendar-based events

Holiday skips

One-time events

Dynamic scheduler updating

Astronomical clock

Optional Text Programming Language

ScriptBasic to create variables, arrays, functions, loops, IF/THEN/ELSE, logical and arithmetic operators, API commands, register access, string functions and operators, time commands

Data Logging

Cyclic data/event logging

© Banner Engineering Corp. All rights reserved.

User Interface— A simple user interface consists of an LCD screen and four LED indicators.

User programmable LCD

- Bind Sure Cross radios
- Conduct a site survey to evaluate the radio signal integrity of radios within the network
- View register and output information
- View system status and configuration

API Interface

- Host-initiated control
- Web service integration

User-Defined LED indicators

- Indicates the status of the DXM1200, processes, or equipment

DXM1200-B2 Models

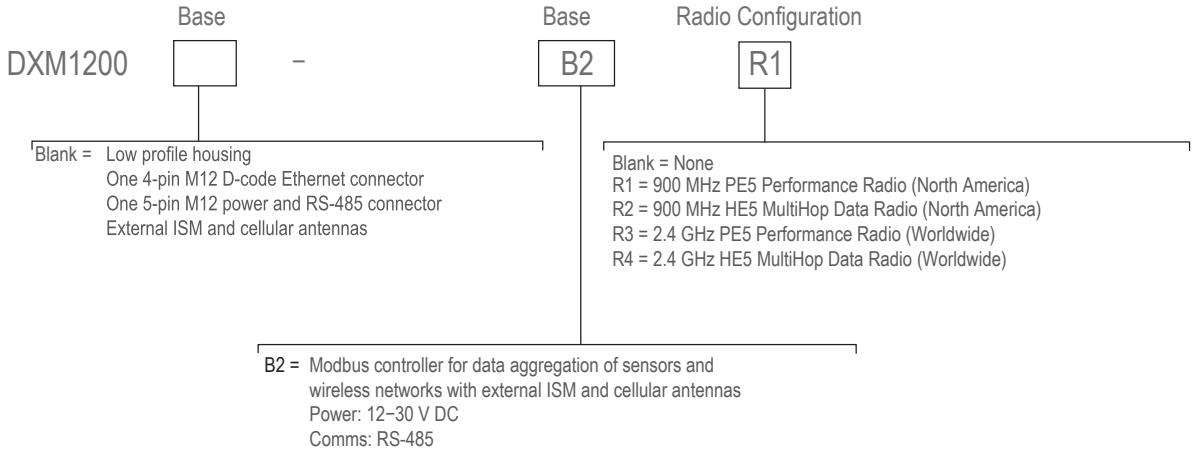

Custom products are available and are designated with a 6-digit number following the standard model number, such as DXM1200-B2R1-123456. For more information about ordering a product customized for your specific needs, contact Banner Engineering Corp.

Cellular Communications—Controllers accept Banner LTE-M (CATM1) modems only. Cellular modems are ordered separately as accessories under the following part numbers:

- LTE CAT-M1 AT&T (North America only):**SXI-CATM1ATT-001**
- LTE CAT-M1 Verizon (United States only): **SXI-CATM1VZW-001**
- LTE CAT-M1/NB-IoT Multi-Carrier (Europe only): **SXI-CATM1WW-001**

For more information, refer to the technical note Activating a Cellular Modem (p/n 205026).

DXM Hardware Configuration Overview

The DXM1200-Bx Wireless Controller can have multiple configurations. The DXM1200 will have a model number label on the housing. Use the model number and model table above to identify which boards are included in the controller.

When opening the DXM1200, follow proper ESD grounding procedures.

IMPORTANT:

- **Electrostatic discharge (ESD) sensitive device**
- ESD can damage the device. Damage from inappropriate handling is not covered by warranty.
- Use proper handling procedures to prevent ESD damage. Proper handling procedures include leaving devices in their anti-static packaging until ready for use; wearing anti-static wrist straps; and assembling units on a grounded, static-dissipative surface.

© Banner Engineering Corp. All rights reserved.
www.bannerengineering.com

The top housing contains the LCD display board. The display board is connected to the base board using a ribbon cable with a 20-pin connector.

DXM1200 base board

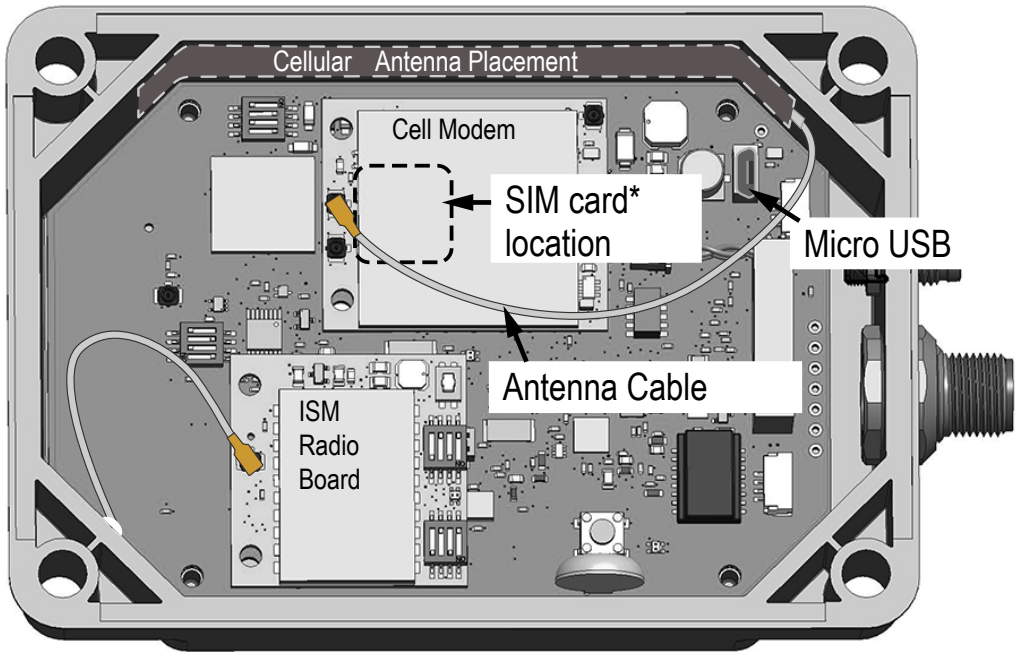

*SIM card is located on the underside of installed modem

DXM1200 Automation Protocols

The DXM1200 supports the following automation protocols.

Modbus® RTU

The DXM1200 manages separate physical ports running the Modbus RTU protocol. The DXM1200 is the Modbus client when operating the Modbus client RTU port. The DXM1200 uses the client Modbus RTU bus to communicate with locally connected Modbus devices or uses the Banner wireless radio to communicate with remote Modbus devices.

Modbus TCP/IP

A host system acting as a Modbus client can access the DXM1200 using the Modbus TCP/IP protocol over Ethernet. Standard Modbus port 502 is used by the DXM1200 for all Modbus TCP/IP requests.

All internal registers are available to the host system concurrently with Modbus RTU.

By default, Modbus TCP/IP client is active. If you are using the DXM as a Modbus TCP client, configure the DXM1200 using Modbus TCP rules in the DXM Configuration Software.

EtherNet/IP™

The Ethernet port is actively running EtherNet/IP. From the factory, the DXM1200 is configured to read and write registers on DX80 wireless devices 1 through 16. Custom individual local register configurations can be set with the Protocol Conversion field in the DXM Configuration Software.

By default, EtherNet/IP is active.

EtherNet/IP registers are limited to 228 registers set as **E/IP Originator to DXM** and 228 registers set as **DXM to Originator**.

PROFINET® (DXM1200-X2 only)

By default, PROFINET is disabled on the DXM1200-X2.

To configure the DXM1200-X2 for PROFINET communications, PROFINET must be enabled using the DXM Configuration Software. The DXM1200-X2 uses fixed Slot sizes and locations in the Local Registers for the Input and Output values. Module sizes supported are 64, 128, 256, and 512 bytes which range from 32 to up to 256 Local Registers in the DXM1200-X2.

Modbus® is a registered trademark of Schneider Electric USA, Inc. PROFINET® is a registered trademark of PROFIBUS Nutzerorganisation e.V. EtherNet/IP™ is a trademark of ODVA, Inc. All other trademarks and registered trademarks cited are the property of their respective owners.

DXM1200 Modbus Overview

The DXM1200 uses internal 32-bit registers to store information. The processor's internal Local Registers serve as the main global pool of registers and are used as the common data exchange mechanism. External Modbus device registers can be read into the Local Registers or written from the local data registers.

The DXM1200, as a Modbus client device, exchanges data using the Local Registers. Modbus over Ethernet (Modbus/TCP) uses the Local Registers as the accessible register data.

© Banner Engineering Corp. All rights reserved.
www.bannerengineering.com

Using Action, Read/Write, and Threshold Rules allows you to manipulate the processor's Local Registers. The ScriptBasic programming capabilities extends the use of Local Registers with variables to create a flexible programming solution for more complex applications.

The processor's Local Registers are divided into three different types: integer, floating point, and non-volatile. When using Local Registers internally, the user can store 32-bit numbers. Using Local Registers with external Modbus devices follows the Modbus standard of a 16-bit holding register. Local Registers are accessible as Modbus ID 199.

Accessing the I/O Base and the LCD follows the same communication as an external Modbus device. Each device has an ID number to uniquely identify itself. The LCD is Modbus ID 201.

DXM1200 Modbus overview

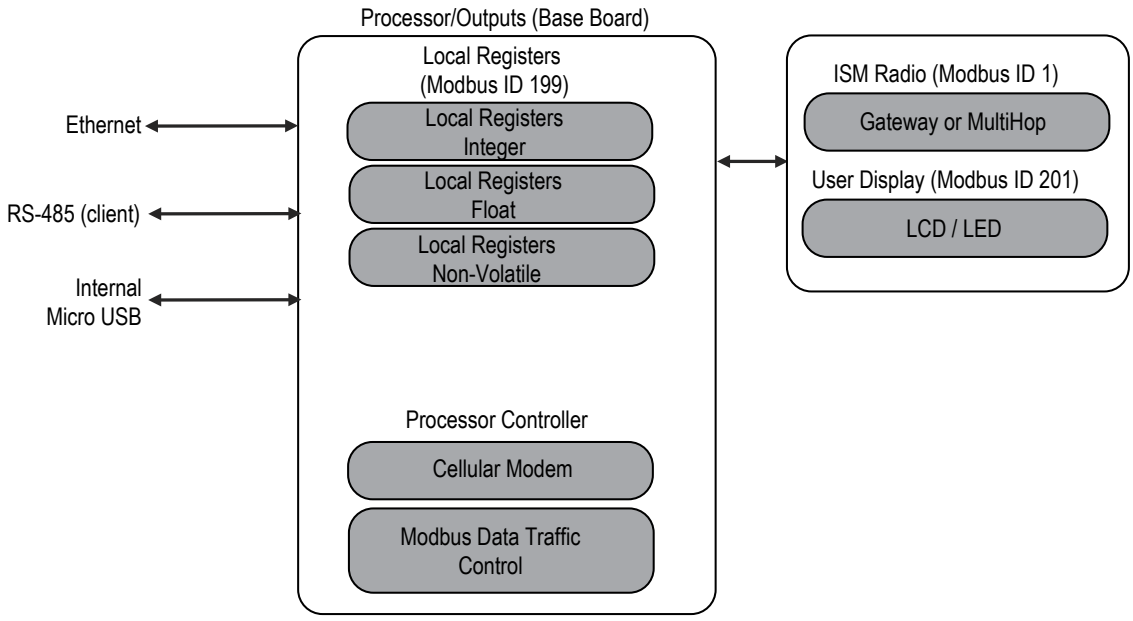

DXM1200-Bx Modbus Registers

The DXM1200-Bx Wireless Controller may have up to three internal Modbus server devices:

DXM internal Modbus IDs (factory default)

Modbus ID	Device
1	DX80 Performance Gateway or MultiHop ISM Radio—MultiHop wireless devices connected to the internal MultiHop radio should be assigned Modbus IDs starting at 11.
199	Local Registers—Internal storage registers of the DXM1200
201	LCD—The user has access to the LED indicators on the DXM1200.

All Modbus registers are defined as 16-bit Modbus Holding Registers. When connecting external Modbus server devices, only use Modbus IDs 2 through 198. The Modbus IDs for the local registers, LCD, and ISM radio are fixed.

Modbus registers for internal local registers (Modbus ID 199)

Local Registers	Type	Description
1–845	32-bit integer	Local data registers
846–849	32-bit integer	Reset, Constant, Timer
851–900	32-bit non-volatile integer	Data flash, non-volatile
901–1000		Reserved for internal use

Continued on page 10

© Banner Engineering Corp. All rights reserved.
www.bannerengineering.com

Continued from page 9

Local Registers	Type	Description
1001–5000	Floating point	Floating point registers, local data registers
5001–7000	32-bit integer	Local data registers
7001–8000	32-bit non-volatile integer	Data flash, non-volatile
> 10000		Read-only virtual registers, system-level data

Modbus registers for the LCD board (Modbus ID 201)

Modbus Register	LED	Color	State
1102 : bit 0	LED 1	Red	1 = On 0 = Off
1103 : bit 0	LED 2	Green	
1104 : bit 0	LED 3	Blue	
1105: bit 0	LED 4	Amber	
1106: bit 0	Backlight		

Modbus Registers for the ISM Radio (Modbus ID 1)—See "Modbus Registers for the MultiHop Radio Board Module" on page 27 and "Modbus Registers for the Performance Gateway Radio Module" on page 28.

DXM Configuration Software Overview

Configure the controller using the configuration software. Use this software to customize your configuration and to process data from the Controller.

Download the latest version of all configuration software from http://www.bannerengineering.com. For more information on using the DXM Configuration Software, refer to the instruction manual (p/n 209933).

The DXM Configuration Software configures the DXM1200 by creating an XML file that is transferred to the DXM1200 using an Ethernet connector or the internal micro USB connection. The DXM1200 can also receive the XML configuration file from a Web server using a cellular or Ethernet connection, depending on your model.

This configuration file governs all aspects of the DXM1200 operation.

The DXM Configuration Software allows the user to define parameters for the Controller and then saves the configuration in an XML file on the PC. After the configuration file is saved, upload the XML configuration file to the Controller for operation.

The wireless network devices are a separate configurable system. Use the DX80 User Configuration Software to configure the internal DX80 wireless Gateway and the attached wireless Nodes. Use the MultiHop Configuration Software if the internal radio is a MultiHop device.

All tools can be connected to the DXM1200 using an Ethernet connection or the internal micro USB.

Overview of the DXM Configuration Software features

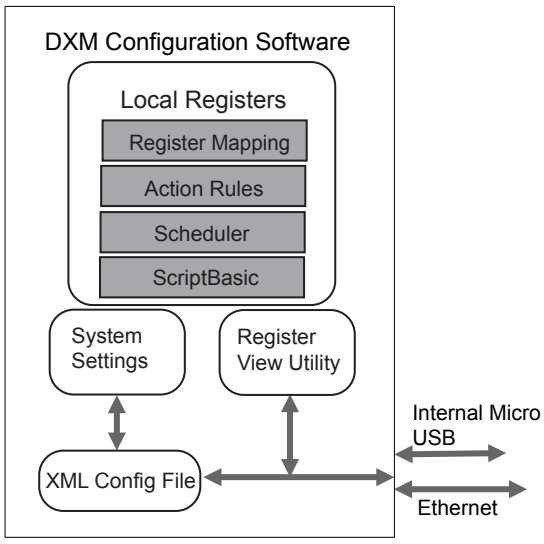

DXM1200E-B1 System Overview

Banner's DXM Logic Controller integrates Banner's wireless radio and cellular connectivity to provide a platform for the Industrial Internet of Things (IIoT).

Inputs and Outputs	Connectivity	Logic Controller	User Interface
N/A	Cellular	Action rules	LCD screen

Continued on page 11

© Banner Engineering Corp. All rights reserved.
www.bannerengineering.com

Continued from page 10

Inputs and Outputs	Connectivity	Logic Controller	User Interface
	Sure Cross® radios	Programming language	LED indicators
	Ethernet	Scheduler	
	Internal micro USB	Push to the cloud	
	RS-485 Client	Data logging	

Modbus registers for internal local registers (Modbus ID 199)

Local Registers	Type	Description
1–845	32-bit integer	Local data registers
846–849	32-bit integer	Reset, Constant, Timer
851–900	32-bit non-volatile integer	Data flash, non-volatile
901–1000		Reserved for internal use
1001–5000	Floating point	Floating point registers, local data registers
5001–7000	32-bit integer	Local data registers
7001–8000	32-bit non-volatile integer	Data flash, non-volatile
> 10000		Read-only virtual registers, system-level data

The DXM1200-B1 model is no longer available for order, but is still covered by the information in this document.

DXM1200-B1 Controller

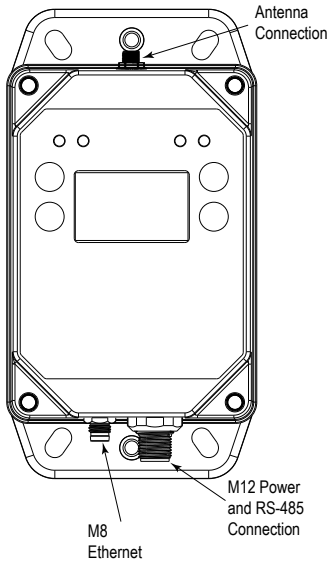

DXM1200E-B1 Controller

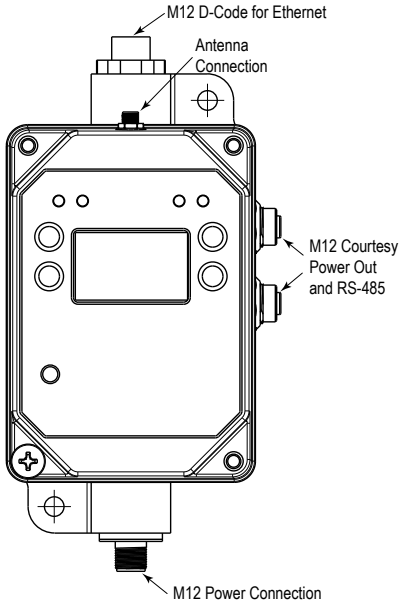

Connectivity—The DXM1200's wired and wireless connectivity options make it easy to share data between local and remote equipment. The cellular modem option eliminates the need for IT infrastructures to connect remote equipment for sensing and control to IIoT cloud services. The integrated Sure Cross® wireless radio enables Modbus connectivity to remote sensors, indicators, and control equipment. Connect directly to any PLC and/or SCADA system for easy integration into existing control or monitoring systems. Banner Industrial Wireless radios have two types of networks that can be used for creating applications and solving problems.

Wired Connectivity

Ethernet: Modbus/TCP (client/server) or Ethernet/IP

Field Bus: Modbus RS-485 Client

Wireless Connectivity

Sure Cross Wireless Radio: DX80 900 MHz, DX80 2.4 GHz, MultiHop 900 MHz, or MultiHop 2.4 GHz

© Banner Engineering Corp. All rights reserved.
www.bannerengineering.com

Cellular modem: LTE-M (United States) or LTE-M/NB-IoT (outside the United States)

Wireless Radio Networks

Performance Wireless Radio Network

Star topology (point-to-point between Gateway and Node radios)

Battery-powered Node applications are more efficient in a star topology

Six inputs and six outputs maximum per radio

MultiHop Wireless Radio Network

Tree topology between one client radio and many repeater and/or server radios

Repeater radios add effectively unlimited radio network range

Full Modbus sensor register data collection as well as typical local I/O like discrete, analog, etc.

Logic Controller—Program the DXM1200's logic controller using action rules and/or ScriptBasic language, which can execute concurrently. The control functions allow freedom when creating custom sensing and control sequences. The logic controller supports the Modbus protocol standards for data management, ensuring seamless integration with existing automation systems. File and LCD password protection is an option.

Register Mapping

Cyclical Read rules from wireless devices or local wired Modbus devices that include optional scaling, error conditions, and the ability to activate a read rule

Cyclical or change of state write rules to wireless devices or local wired Modbus devices with scaling

Modbus TCP Client read or write rules for external devices on the network

Action Rules

Thresholds (IF/THEN/ELSE) with timers, minimum on/off time, and logging options

Math/Logic Rules (arithmetic and bitwise operators)

Control Logic (logical operators and SR/T/D/JK flip flops)

Trending (multiple averaging filters)

Tracking (counts, on/off times)

Push data on conditions

Scheduler

Time/calendar-based events

Holiday skips

One-time events

Dynamic scheduler updating

Astronomical clock

Optional Text Programming Language

ScriptBasic to create variables, arrays, functions, loops, IF/THEN/ELSE, logical and arithmetic operators, API commands, register access, string functions and operators, time commands

Data Logging

Cyclic data/event logging

User Interface— A simple user interface consists of an LCD screen and four LED indicators.

User programmable LCD

Bind Sure Cross radios

Conduct a site survey to evaluate the radio signal integrity of radios within the network

View register and output information

View system status and configuration

API Interface

Host-initiated control

Web service integration

User-Defined LED indicators

Indicates the status of the DXM1200, processes, or equipment

DXM1200E-B1 Models

DXM1200 Base			Radio Configuration
E	-	B1	R
E = Extended housing One 4-pin D-Code M12 Ethernet connector One 5-pin M12 power and RS-485 connector Two 5-pin M12 RS-485 connectors		B1 = Modbus controller for data aggregation of sensors and wireless networks Power: 12-30 VDC Comms: RS-485	Blank = None R1 = 900 MHz, 500 mW PE5 Performance Radio (North America) R3 = 2.4 GHz, 65 mW PE5 Performance Radio (Worldwide)

Custom products are available and are designated with a 6-digit number following the standard model number, such as DXM1200E-B1R1-123456. For more information about ordering a product customized for your specific needs, contact Banner Engineering Corp.

Cellular Communications—Controllers accept Banner LTE-M (CATM1) modems only. Cellular modems are ordered separately as accessories under the following part numbers:

- LTE CAT-M1 AT&T (North America only):**SXI-CATM1ATT-001**
- LTE CAT-M1 Verizon (United States only): **SXI-CATM1VZW-001**
- LTE CAT-M1/NB-IoT Multi-Carrier (Europe only): **SXI-CATM1WW-001**

For more information, refer to the technical note Activating a Cellular Modem (p/n 205026).

The following models are no longer available for order but are still covered by the information in this document.

© Banner Engineering Corp. All rights reserved.
www.bannerengineering.com

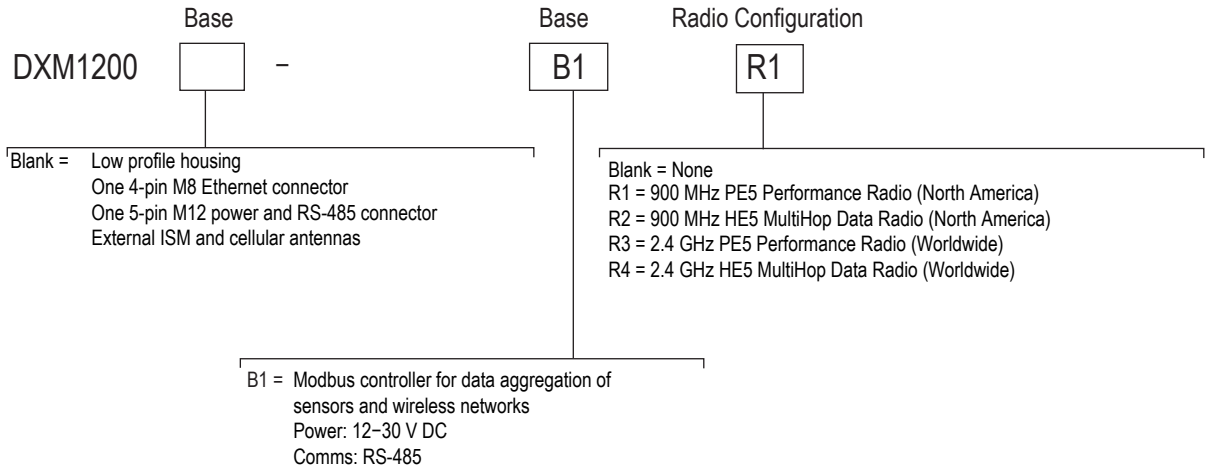

Custom products are available and are designated with a 6-digit number following the standard model number, such as DXM1200-B1R1-123456. Not all model configurations are available. For more information about ordering a product customized for your specific needs, contact Banner Engineering.

Specifications

Radio Specifications for Performance and MultiHop (500 mW)

Radio Transmit Power (900 MHz, 500 mW radios)

Conducted: 27 dBm (500 mW)

EIRP with the supplied antenna: < 36 dBm

Radio Transmit Power (2.4 GHz radios)

Conducted: < 18 dBm (65 mW)

EIRP with the supplied antenna: < 20 dBm (100 mW)

Radio Range

A 2 dB antenna ships with this device.

Transmit power and range are subject to many factors, including antenna gain, installation methods, characteristics of the application, and environmental conditions.

Please refer to the following documents for installation instructions and high-gain antenna options.

Installing Your Sure Cross® Radios (151514)
Conducting a Site Survey (133602)
Sure Cross® Antenna Basics (132113)

Antenna Minimum Separation Distance

900 MHz radios transmitting at ≥ 500 mW: 4.57 m (15 ft) with the supplied antenna

2.4 GHz radios transmitting at 65 mW: 0.3 m (1 ft) with the supplied antenna

Antenna Connection

Ext. Reverse Polarity SMA, 50 Ohms

Max Tightening Torque: 0.45 N·m (4 lbf·in)

Spread Spectrum Technology

FHSS (Frequency Hopping Spread Spectrum)

Link Timeout (Performance)

Gateway: Configurable via User Configuration Software

Node: Defined by Gateway

Radio Packet Size (MultiHop)

900 MHz: 175 bytes (85 Modbus registers)

2.4 GHz: 75 bytes (37 Modbus registers)

900 MHz Compliance (SX7023EXT Radio Module)

Radio module is indicated by the product label marking

Contains FCC ID: UE3SX7023EXT

Contains IC: 7044A-SX7023EXT

2.4 GHz Compliance (SX243 Radio Module)

Radio module is indicated by the product label marking

Contains FCC ID: UE3SX243

Radio Equipment Directive (RED) 2014/53/EU

Contains IC: 7044A-SX243

RS-485 Communication Specifications

Communication Hardware (MultiHop RS-485)

Interface: 2-wire half-duplex RS-485

Baud rates: 9.6k, 19.2k (default), or 38.4k via DIP switches; 1200 and 2400 via the MultiHop Configuration Software

Data format: 8 data bits, no parity, 1 stop bit

DXM1200-B1 and DXM1200E-B1 Specifications

Supply Voltage

12 to 30 V DC (use only with a suitable Class 2 power supply (UL) or a Limited Power Source (LPS) (CE) power supply)

Power Consumption

60 mA average at 24 V

Communication Protocols

Modbus RTU Client, Modbus TCP, and EtherNet/IP

Connection

Integral 5-pin M12 male quick-disconnect connector

© Banner Engineering Corp. All rights reserved.
www.bannerengineering.com

Construction
Polycarbonate

Security Protocols
TLS, SSL, HTTPS

Required Overcurrent Protection

WARNING: Electrical connections must be made by qualified personnel in accordance with local and national electrical codes and regulations.

Overcurrent protection is required to be provided by end product application per the supplied table.

Overcurrent protection may be provided with external fusing or via Current Limiting, Class 2 Power Supply.

Supply wiring leads < 24 AWG shall not be spliced.

For additional product support, go to www.bannerengineering.com.

Supply Wiring (AWG)	Required Overcurrent Protection (A)	Supply Wiring (AWG)	Required Overcurrent Protection (A)
20	5.0	26	1.0
22	3.0	28	0.8

Continued on page 15

DXM1200-B2 Specifications

Supply Voltage
12 to 30 V DC (use only with a suitable Class 2 power supply (UL) or a Limited Power Source (LPS) (CE) power supply)

Power Consumption
60 mA average at 24 V

Communication Protocols
Modbus RTU Client, Modbus TCP, and EtherNet/IP

Connection
Integral 5-pin M12 male quick-disconnect connector

Construction
Polycarbonate

Security Protocols
TLS, SSL, HTTPS

Logging
8 GB maximum; embedded flash memory chip

Certifications
CE/UKCA approval only applies to 2.4 GHz models

Banner Engineering BV
Park Lane, Culliganlaan 2F bus 3
1831 Diegem, BELGIUM

Turck Banner LTD Blenheim House
Blenheim Court
Wickford, Essex SS11 8YT
GREAT BRITAIN

ANATEL
Agência Nacional de Telecomunicações
03737-22-04042

Logging
8 GB maximum; removable Micro SD card format

Continued from page 13

Supply Wiring (AWG)	Required Overcurrent Protection (A)	Supply Wiring (AWG)	Required Overcurrent Protection (A)
24	2.0	30	0.5

Certifications
CE/UKCA approval only applies to 2.4 GHz models

Banner Engineering BV
Park Lane, Culliganlaan 2F bus 3
1831 Diegem, BELGIUM

Turck Banner LTD Blenheim House
Blenheim Court
Wickford, Essex SS11 8YT
GREAT BRITAIN

ANATEL
Agência Nacional de Telecomunicações
03737-22-04042

Required Overcurrent Protection

WARNING: Electrical connections must be made by qualified personnel in accordance with local and national electrical codes and regulations.

Overcurrent protection is required to be provided by end product application per the supplied table.

Overcurrent protection may be provided with external fusing or via Current Limiting, Class 2 Power Supply.

Supply wiring leads < 24 AWG shall not be spliced.

For additional product support, go to www.bannerengineering.com.

Supply Wiring (AWG)	Required Overcurrent Protection (A)	Supply Wiring (AWG)	Required Overcurrent Protection (A)
20	5.0	26	1.0
22	3.0	28	0.8
24	2.0	30	0.5

© Banner Engineering Corp. All rights reserved.
www.bannerengineering.com

Environmental Specifications (DXM1200)

Operating Conditions[1]

–20 °C to +60 °C (–4 °F to +140 °F)

95% maximum relative humidity (non-condensing)

Radiated Immunity: 3 V/m (EN 61000-4-3)

Environmental Rating

IP67

[1] Operating the devices at the maximum operating conditions for extended periods can shorten the life of the device.

Shock and Vibration

All models meet IEC 60068-2-6 and IEC 60068-2-27 testing criteria

Shock: 30G 11 ms duration, half sine wave per IEC 60068-2-27

Vibration: 10 Hz to 55 Hz, 0.5 mm peak-to-peak amplitude per IEC 60068-2-6

DXM1200E-B1 Dimensions

All measurements are listed in millimeters, unless noted otherwise. The measurements provided are subject to change.

DXM1200E-B1 dimensions

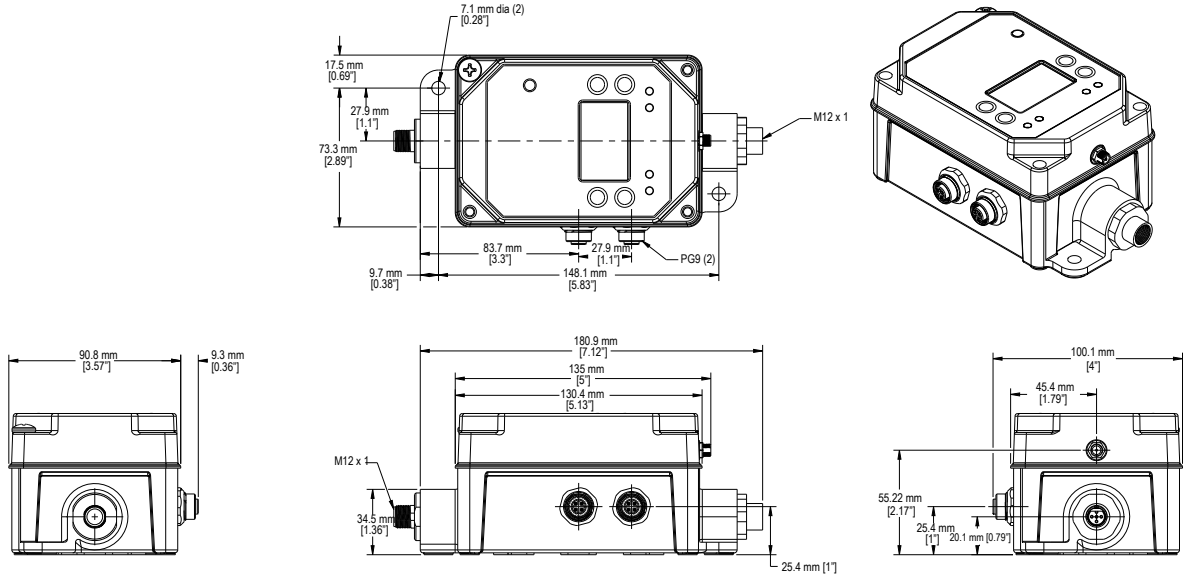

The following models are no longer available for order but are still covered by the information in this document.

DXM1200-B1 dimensions

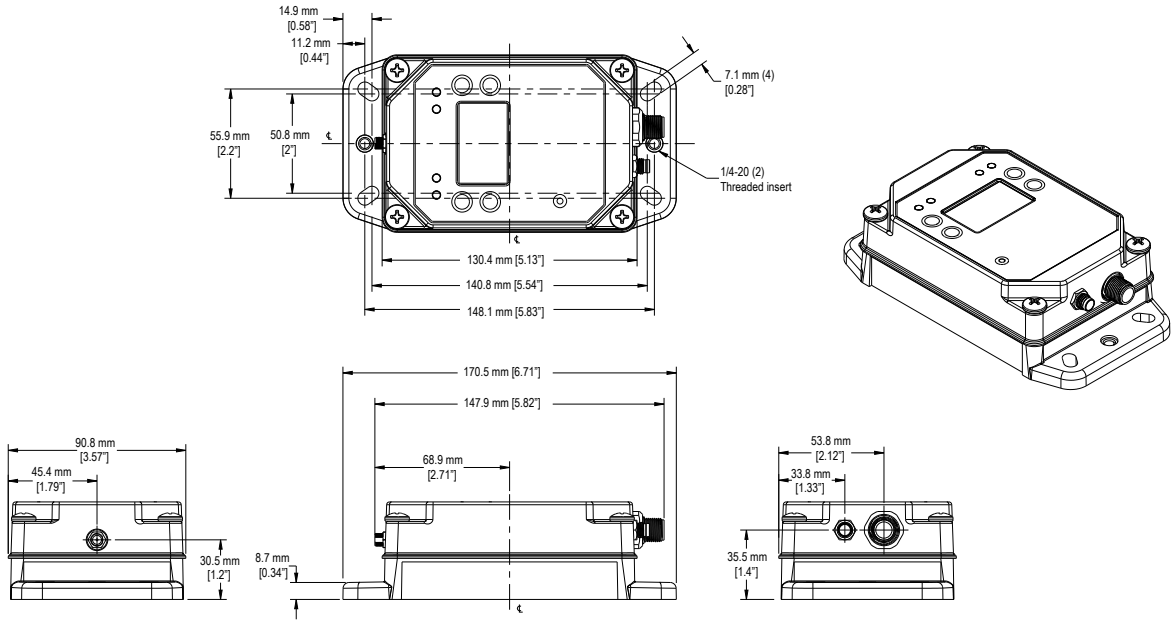

© Banner Engineering Corp. All rights reserved.
www.bannerengineering.com

DXM1200-B2 Dimensions

All measurements are listed in millimeters, unless noted otherwise. The measurements provided are subject to change.

DXM1200-B2 dimensions

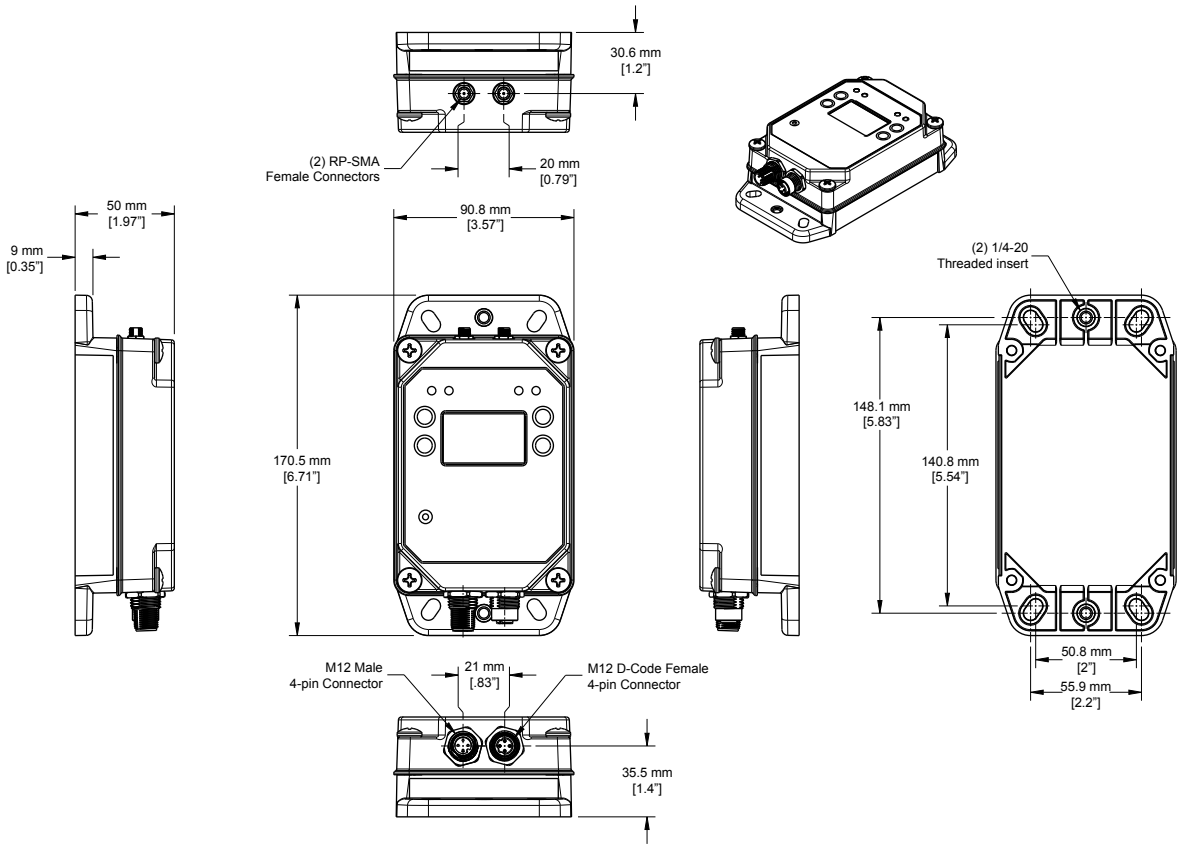

© Banner Engineering Corp. All rights reserved.
www.bannerengineering.com

Chapter Contents

Device Setup 17
Configuration Instructions 22

Chapter 2 Quick Start Guide

Device Setup

Apply Power to the DXM1200-Bx Controller

Follow these instructions to apply 12–30 V DC power to the controller using a wall plug.

Equipment used:

- **DXM1200**
- **PSW-24-1** DC power supply with multi-blade wall plug, 100–240 V AC 50/60 Hz input, 24 V DC 1 A output, UL Listed Class 2, 4-pin female M12 connector

5-pin M12 male connector wiring

5-pin M12 Male Connector	Pin	Wire Color	Description
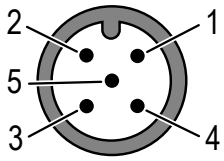	1	Brown (bn)	10 to 30 V DC
	2	White (wh)	RS485 / D1 / B / +
	3	Blue (bu)	DC common (GND)
	4	Black (bk)	RS485 / D0 / A / –
	5	Gray (gy)	Comms Ground

IMPORTANT:

- **Never operate a radio without connecting an antenna**
- Operating radios without an antenna connected will damage the radio circuitry.
- To avoid damaging the radio circuitry, never apply power to a Sure Cross® Performance or Sure Cross® MultiHop radio without an antenna connected.

1. Connect the **PSW-24-1** power supply into the DXM Controller, aligning the keys in the connector, and hand tighten.



2. Plug the **PSW-24-1**power supply into a power outlet using the appropriate regional wall adapter.

Wiring Power and RS-485 for the DXM1200-B1 and DXM1200E-B1 Models

Use the following wiring diagrams to wire power and communication to the DXM1200 and DXM1200E devices. Connecting power to the communication pins will cause permanent damage.

© Banner Engineering Corp. All rights reserved.
www.bannerengineering.com

M12 male power and RS-485 connection for the DXM1200 and DXM1200E

5-pin M12 Male Connector	Pin	Wire Color	Description
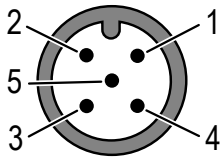	1	Brown (bn)	10 to 30 V DC
	2	White (wh)	RS485 / D1 / B / +
	3	Blue (bu)	DC common (GND)
	4	Black (bk)	RS485 / D0 / A / –
	5	Gray (gy)	Comms Ground

M8 male industrial Ethernet connection for the DXM1200

4-pin M8 Industrial Ethernet Connector (male)	Pin	Wire Color	Description
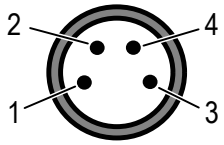	1	White/orange	+ Tx
	2	White/blue	+Rx
	3	Orange	–Tx
	4	Blue	–Rx

Female D-Code Ethernet connection for the DXM1200E

4-pin Industrial Ethernet Connector (female)	Pin	Wire Color	Description
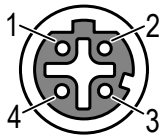	1	Black	+ Tx
	2	Red	+Rx
	3	Green	–Tx
	4	White	–Rx

M12 female RS-485 connection for the DXM1200E

5-pin M12 Connector (female)	Pin	Wire Color	Description
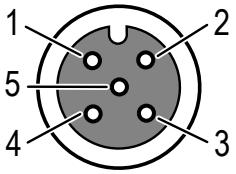	1	Brown (bn)	10 to 30 V DC from the input power connector
	2	White (wh)	RS485 / D1 / B / +
	3	Blue (bu)	DC common (GND) from the input power connector
	4	Black (bk)	RS485 / D0 / A / –
	5	N/A	No connection

Wiring Power and RS-485 for the DXM1200-B2 Model

Use the following wiring diagrams to wire power and communication to the DXM1200-B2 devices.

Connecting power to the communication pins will cause permanent damage.

M12 male power and RS-485 connection

5-pin M12 Male Connector	Pin	Wire Color	Description
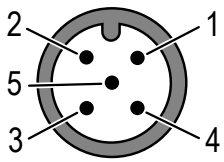	1	Brown (bn)	10 to 30 V DC
	2	White (wh)	RS485 / D1 / B / +
	3	Blue (bu)	DC common (GND)
	4	Black (bk)	RS485 / D0 / A / –
	5	Gray (gy)	Comms Ground

© Banner Engineering Corp. All rights reserved.
www.bannerengineering.com

Female D-Code industrial Ethernet connection

4-pin Industrial Ethernet Connector (female)	Pin	Wire Color	Description
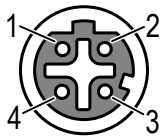	1	Black	+ Tx
	2	Red	+Rx
	3	Green	–Tx
	4	White	–Rx

Binding and Conducting a Site Survey with the ISM Radio

Before the ISM radio can communicate, the ISM radio within the DXM must be bound to the other radios in the wireless network.

Use the DXM LCD menu to bind external radios to the internal ISM radio.

If you are having difficulty running binding or site surveys, it may be because of the speed of the XML configuration file or script running on the DXM. To resolve this issue, try one of the following options:

- Disable the XML and script by setting DIP switch 4 on the processor board to ON and cycling the power to the DXM. After binding the devices, turn DIP switch 4 back OFF and cycle power again to return to normal operation of the XML and script.
- Adjust the XML or script to slow down the RTU read or write rules.
- Upload a blank XML, bind all devices, then upload the configured XML file.

Bind a DX80 Node to a DXM and Assign the Node Address

Binding Nodes to a Gateway ensures the Nodes only exchange data with the Gateway they are bound to. After a Gateway enters binding mode, the Gateway automatically generates and transmits a unique extended addressing (XADR), or binding, code to all Nodes within range that are also in binding mode. The extended addressing (binding) code defines the network, and all radios within a network must use the same code.

1. Apply power to all the devices.

   Separate radios by two meters when running the binding procedure. Put only one DXM Gateway into binding mode at a time to prevent binding to the wrong Gateway.

2. Enter binding mode on the DXM radio:
   a. Use the arrow keys to select the **ISM Radio** menu on the LCD and press **ENTER**.
   b. Highlight the **Binding** menu and press **ENTER**.
3. Assign the Node address to the Node.
   - For Nodes without rotary dials: Use the DXM arrow keys to select the Node address to assign to the DX80 Node about to enter binding mode. The DXM assigns this Node address to the next Node that enters binding mode. Only bind one Node at a time.
   - For Nodes with rotary dials: Use the Node's rotary dials to assign a valid decimal Node Address (between 01 and 47). The left rotary dial represents the tens digit (0 through 4) and the right dial represents the ones digit (0 through 9) of the Node Address. You can leave the DXM "Bind to" address set to 1 because the Node's rotary dials will override that setting.
4. Start binding mode on the DXM radio by pressing **ENTER** on the DXM radio.
5. Enter binding mode on the DX80 Node.
   - For housed radios, triple-click button 2.
   - For board-level radios, triple-click the button.
   - For Nodes without buttons, refer to the Node's datasheet for instructions on entering binding mode.

   The left and right LEDs flash alternately and the Node searches for a Gateway in binding mode. After the Node binds, the LEDs stay solid momentarily, then they flash together four times. The Node automatically exits binding mode and reboots.
6. Label the Node with the assigned address number for future reference.
7. Press **BACK** on the DXM to exit binding mode for that specific Node address.

   The Node LEDs continue to flash red until the DXM exits binding mode with that Node address.
8. Repeat these steps for as many DX80 Nodes as are needed for your network.

© Banner Engineering Corp. All rights reserved.

9. When you are finished binding, press **BACK** on the DXM until you return to the main menu.

Bind a MultiHop Radio to a DXM and Assign the Device ID

Before beginning the binding procedure, apply power to all the devices. Separate radios by two (2) meters when running the binding procedure. Put only one DXM MultiHop client radio into binding mode at a time to prevent binding the server or repeater radios to the wrong client radio.

Binding MultiHop radios ensures all MultiHop radios within a network communicate only with other radios within the same network. The MultiHop client radio automatically generates a unique binding code when it enters binding mode. This code is transmitted to all radios within range that are also in binding mode. After a repeater/server radio is bound, the repeater/server radio accepts data only from the client radio to which it is bound. The binding code defines the network, and all radios within a network must use the same binding code.

1. Enter binding mode on the DXM radio:
    a. Use the arrow keys select the **ISM Radio** menu on the LCD and press **ENTER**.
    b. Highlight the **Binding** menu and press **ENTER**.
2. Assign the device address to the repeater or server radios. Valid device IDs are 11 through 60.
    - For MultiHop radios without rotary dials: Use the DXM arrow keys to select the device ID to assign to the MultiHop radio about to enter binding mode. The DXM assigns this device ID to the next radio that enters binding mode. Only bind one server radio at a time.
    - For MultiHop radios with rotary dials: Use the MultiHop radio's rotary dials to assign a device ID . The left rotary dial represents the tens digit (1 through 6) and the right dial represents the ones digit (0 through 9) of the device ID. You can leave the DXM "Bind to" address set to 1 because the MultiHop's rotary dials will override that setting.
3. Start binding mode on the DXM radio by pressing **ENTER** on the DXM radio.
4. After entering binding mode on the DXM, put the MultiHop repeater or server radio into binding mode.
    - For housed radios, triple-click button 2.
    - For board-level radios, triple-click the button.
    - For radios without buttons, refer to the radio's datasheet for instructions on entering binding mode.

    After binding is completed, the MultiHop radio automatically exits binding mode and begins operation.
5. Press **BACK** on the DXM to exit binding mode for that specific device address.

    The MultiHop radio's LEDs continue to flash red until the DXM exits binding mode with that MultiHop radio.
6. Label the MultiHop radio with the assigned address number for future reference.
7. Repeat these steps, changing the device address, for as many MultiHop radios as are needed for your network.
8. When you are finished binding, press **BACK** on the DXM until you return to the main menu.

    All radio devices begin to form the network after the client data radio exits binding mode.

Conduct a Site Survey from the DXM

Conduct a Site Survey to verify the wireless communication between the radios within your wireless network.

Conduct the site survey when the Nodes and DXM Controller are at the proposed installation sites to determine each radio's signal strength with the DXM.

For a DX80 network, the Gateway controls the site survey and the results display on the LCD. Running a site survey on a DX80 network does not affect the throughput of the DX80 network. The DX80 Gateway-Node system can run a site survey analysis while the network is operational. For a MulitHop network, the client device passes the site survey request to the intended Modbus server device. The Site Survey runs and the results display on the LCD. Running a site survey on a MultiHop network stops all network traffic to that device.

1. On the DXM: Use the arrow buttons to select the **ISM Radio** menu and press **ENTER**.
2. Select the **Site Survey** menu and press **ENTER**.
3. Use the Up or Down arrows to select the device ID number and press **ENTER** to run the site survey with that radio.

    The site survey results display as green, yellow, red, and missed packets. Green indicates the highest signal strength, then yellow, and red. Missed packets were not received.
4. When you are finished running the Site Survey, press **Back** twice to return to the main menu and exit site survey mode.

© Banner Engineering Corp. All rights reserved.

If the Site Survey fails (100 missed packets), verify the radios are at least 10 feet from the DXM and/or rerun the binding procedure. If you find poor signal quality, common solutions include moving the DXM to a more central location relative to the Nodes or using higher-gain antennas on the DXM. Contact your local Banner Engineering representative for assistance.

Set a Static IP Address

Change the IP address of the DXM to connect to a local area network, Modbus TCP/IP host controller, or EtherNet/IP host controller.

There are two ways to set the IP address: using the DXM's LCD menu or using the configuration software to change the XML file. IP addresses entered into the LCD menu system override the IP addresses in the XML configuration files. To use the IP addresses set in the XML configuration file, clear the IP addresses from the menu system.

System Config menu options

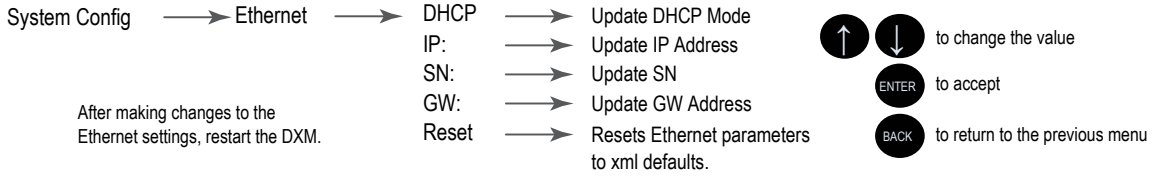

1. On the DXM, use the arrows and move to the **System Config** menu. Press **ENTER**.
2. Use the arrow keys to select the **Ethernet** menu. Press **ENTER**.
3. Highlight the **DHCP** selection and press **ENTER**. Set DHCP to OFF.
4. The system will request a restart, press **ENTER** to confirm.
5. Follow steps 1 and 2 to reenter the Ethernet menu. Use the arrow keys to select **IP**. Press **ENTER**.
   The IP address displays (for example, 192.168.0.1).
6. Use the up and down arrows to change the IP address. Press **ENTER** to move to the next octet.
7. Press **ENTER** on the final octet to accept the changes.
8. Cycle power to the DXM.
   The changes are saved on the DXM and the new IP address will be used.

Use this same procedure to set the subnet mask (SN) and default gateway (GW) to match your network requirements. Your IT department can provide these settings if needed.

© Banner Engineering Corp. All rights reserved.

Configuration Instructions

Configuring the DXM1200-Bx Controller

Configure the DXM1200 using the configuration software.

The DXM Configuration Software allows the user to define parameters for the DXM1200, then saves the configuration in an XML file on the PC.

To configure the DXM1200, connect the provided Ethernet cable to both the DXM1200 and a computer or local area network. The computer and DXM must have IP addresses from the same network. After the configuration file is saved, upload the XML configuration file to the DXM1200 for operation.

This quick start guide outlines the basic operations to set up a DXM1200 using the configuration software. For a more comprehensive explanation of features, refer to the DXM Configuration Software Instruction Manual (p/n 209933).

For a complete list of all associated product documentation, go to "Product Support and Maintenance" on page 70.

DXM Configuration Software

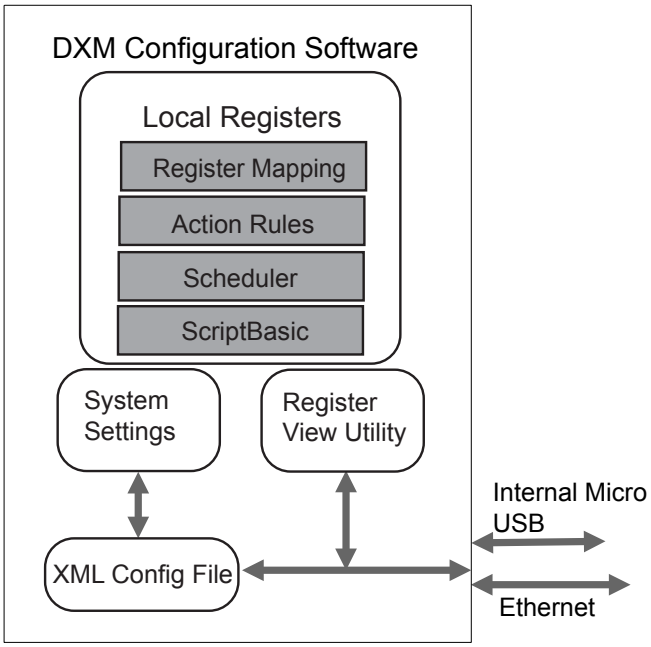

Connect the DXM1200 to the Software

Follow these steps to connect your DXM1200 to the software and download the existing configuration file.

1. On the computer, download the DXM Configuration Software v4 from the Banner Engineering website and install it.
2. On the DXM: Apply power to the DXM.
3. Connect the DXM Controller to the computer with an M12 to RJ-45 cable or skip if the DXM is connected to the same network as the computer.
4. On the computer: Launch the DXM Configuration Software.
5. From the **Connect to DXM** menu, use the **Select DXM Model** drop-down list to select your controller model.
6. On the menu bar, go to **Device › Connection Settings**.
   - If you are connected to the same network as the DXM, select **TCP/IP** and enter the DXM IP address. Click **Connect**.
   - If you are using a USB cable, select **Serial**, then select the COM port that the USB cable is plugged into. Click **Connect**. If you are unsure which COM port and multiple appear, attempt to connect to each one of them until successful.
7. After the DXM is connected to the software, click **Device › Get XML configuration from DXM** to download the current XML file.
8. Name and save the file to the computer.

Configuration Example: Reading Registers on a Modbus Server Device

The Local Registers are listed on the **Local Registers › Local Registers in Use** screen. The local registers are the main global pool of registers that are defined by the user to store data within the DXM1200.

The bottom status bar displays the communications status, application status, and the DXM Configuration Software version.

In this short example, we will configure the DXM1200 to read six registers on an external Modbus server device and save the data into the local registers.

© Banner Engineering Corp. All rights reserved.
www.bannerengineering.com

The software only loads a file to the DXM. Internal parameter settings that are changed in the software but not saved to the file will not be sent to the device.

1. Step 1: Define the Local Registers.
2. Step 2: Create an RTU Read Rule.
3. Step 3: Create an RTU Read Rule for the DXM1200-B2 or -X2 Controller.
4. Step 3: Set the Time
5. Step 4: Save and Upload the Configuration File

Define the Local Registers

Change the name and parameter settings for each Local Register under the **Local Registers in Use** screen. You may change them individually (Edit Register) or in groups (Modify Multiple Registers).

Modify Multiple Registers - Configuration Example

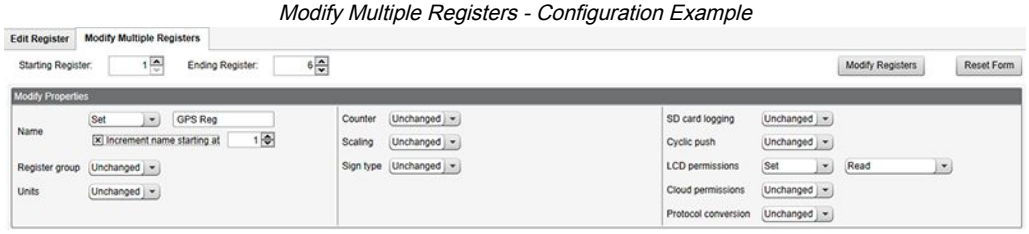

1. Click on the **Modify Multiple Registers** section of the **Local Registers in Use** screen.
   Use this screen to quickly modify multiple local registers at a time.
2. Select the range of registers to change.
3. Select the fields to change in each local register.
   In our example, registers one through six will be changed and the names will be GPS Reg followed by an auto-incremented number. This example will also change the LCD permissions flag to **Set**, then **Read** to allow the values of the local registers to display on the LCD.
4. Click **Modify Registers** to apply your changes.

Create an RTU Read Rule

Follow these steps to create a new read rule.

This example screen shows a read rule created to read six registers (address 1 through 6), from Modbus ID 4. The results are stored in the Local Registers 1 through 6.

Read Rules - Configuration Example

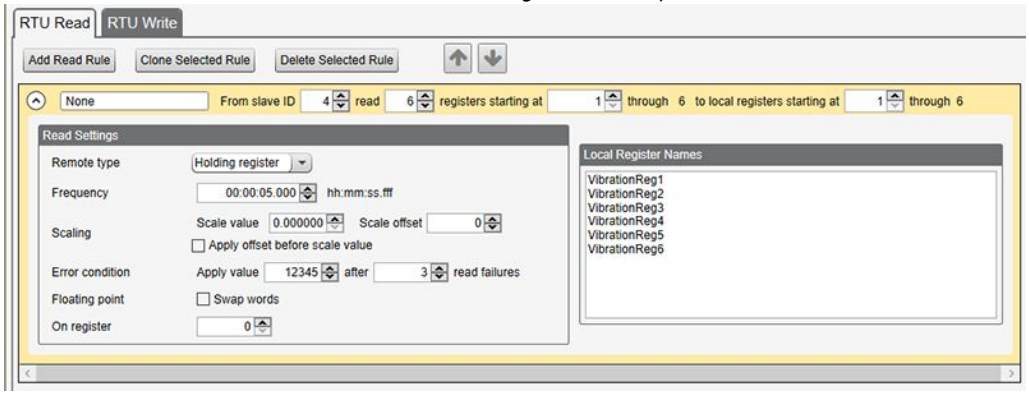

1. From the **Register Mapping › RTU › RTU Read** screen, click **Add Read Rule**.
2. Click the arrow next to the name to display the parameters.
3. Name your rule.
4. Select the device ID.
5. Select how many registers to read, and the beginning register.
6. Define the register type, how often to read the register, and any other appropriate parameters.

© Banner Engineering Corp. All rights reserved.
www.bannerengineering.com

7. If necessary, select the error condition. For this example, if the read function fails after three attempts, the read rule writes 12345 to the DXM local registers. Notice the list of local register names this read rule is using.

Create an RTU Read Rule for the ISM Radio of a DXM1200-B2 or -X2

Follow these steps to create a new read rule to access data from devices connected to the radio of a DXM1200-B2 or DXM1200-X2.

This example creates a read rule to read six registers (1 through 6), from the radio (port 5) at Modbus ID 1. The results are stored in the Local Registers 1 through 6.

1. Define the port settings to be compatible with the connected devices.
   a. Go to the **Register Mapping › RTU › RTU Configuration** screen.

RTU Configuration screen

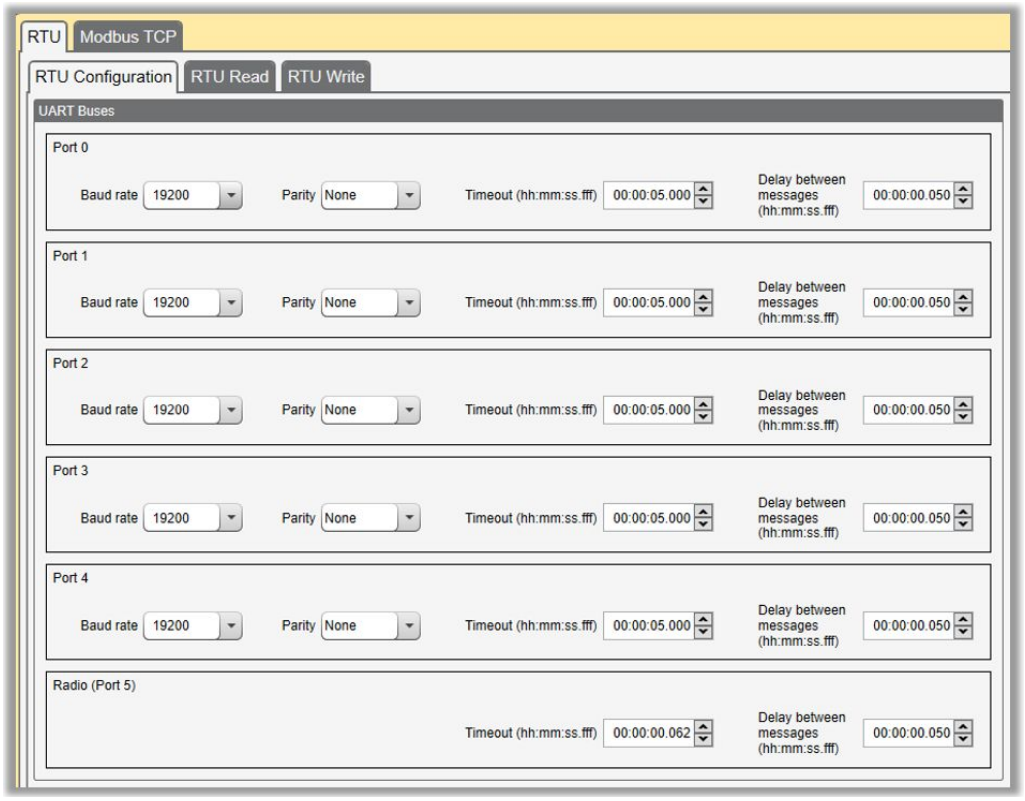

   b. Go to the RTU configuration panel for **Radio (Port 5)**.
   c. Modify the port settings as needed.
   - **Timeout** controls how long the controller waits before determining a command has failed to send. Set the **Timeout** based on the specific application requirements. The minimum **Timeout** interval for Radio (Port 5) is 62.5 ms.
   - **Delay between messages** defines the minimum wait time before sending another command. Set the delay based on the specific application requirements.
2. From the **Register Mapping › RTU › RTU Read** screen, click **Add Read Rule**.
3. Click the arrow next to the name to display the parameters.
4. Name your rule.
5. Select the port number to which the device is connected. For wireless devices, this is **Radio (Port 5)**.
6. Select the Modbus ID of the device. For wireless devices, this is **Modbus ID 1**.
7. Select how many registers to read and select the beginning register.
   Refer to the Modbus Holding Register table within the documentation for each server device.
8. Define the register type, how often to read the register, and any other appropriate parameters.
9. If necessary, select the error condition. For this example, if the read function fails after three attempts, the read rule writes 12345 to the DXM local registers. Notice the list of local register names this read rule is using.

© Banner Engineering Corp. All rights reserved.
www.bannerengineering.com

Read Rules - Configuration Example

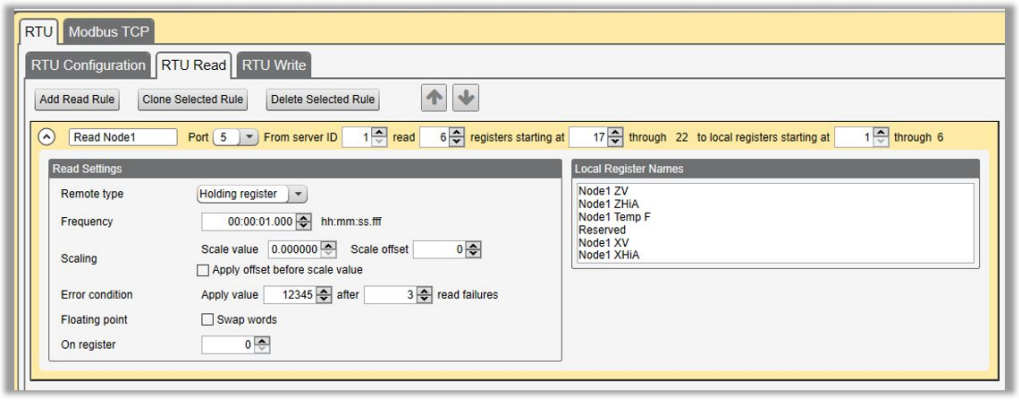

Set the Time

Use the **Settings › System** screen to define the time zone and daylight saving option. The time zone and DST options are saved into the configuration file.

Settings > System > Device Time

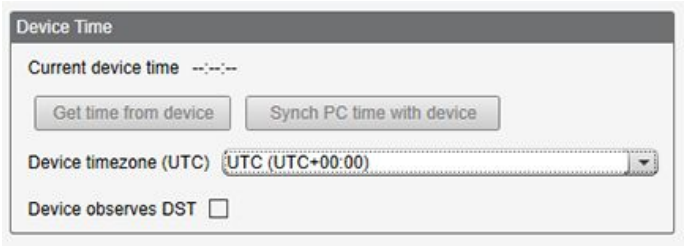

1. Go to the **Settings › System** screen.
2. If you connect the DXM to a computer, click **Sync PC Time with Device** to set the time on the DXM to match the time of the computer.
3. Set your time zone and select whether or not your device observes daylight saving time (DST).

Save and Upload the Configuration File

After making any changes to the configuration, you must save the configuration files to your computer, then upload it to the device.

Changes to the XML file are not automatically saved. Save your configuration file before exiting the software and before sending the XML file to the device to avoid losing data. If you select **DXM › Send XML Configuration to DXM** before saving the configuration file, the software will prompt you to choose between saving the file or continuing without saving the file.

1. Save the XML configuration file to your hard drive by going to the **File › Save As** menu.
2. Go to the **DXM › Send XML Configuration to DXM** menu.

Status indicator bar



- If the Application Status indicator is red, close and restart the DXM Configuration Software, unplug and re-plug in the cable and reconnect the DXM to the software.
- If the Application Status indicator is green, the file upload is complete.
- If the Application Status indicator is gray and the green status bar is in motion, the file transfer is in progress.

After the file transfer is complete, the device reboots and begins running the new configuration.

© Banner Engineering Corp. All rights reserved.
www.bannerengineering.com

Chapter Contents

DIP Switches for the MultiHop Radio 26
Modbus Registers for the MultiHop Radio Board Module 27
DIP Switch Settings for the Performance Gateway Radio Module 28
Modbus Registers for the Performance Gateway Radio Module 28

Chapter 3 ISM Radio Board (ID 1)

Plug the ISM radio into the I/O base board with the U.FL antenna connector closest to the SMA connectors. Typically, users will not need to adjust the DIP switch settings on the physical radio modules.

For the DXM models with a display, set the radio options using the LCD menu.

ISM radio board

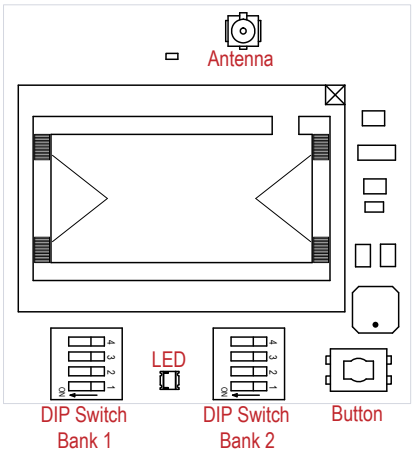

Button Operation

For DXM models without an LCD, use the button to bind the ISM radio. For models with an LCD, use the ISM menu to bind the radio.

LED Operation

The LED located on the ISM radio module indicates power and communications traffic. ISM board LED operations also display on the LED on the right side of the I/O base board.

- Solid green DX80 ISM radio LED indicates power.
- Flashing green MultiHop ISM radio LED indicates operation.
- Red and green combined: Communications traffic and binding.

DIP Switches for the MultiHop Radio

MultiHop ISM radio models include R2, R4, or R5 in the model number.

- DXMxxx-xxR2 - MultiHop 900 MHz
- DXMxxx-xxR4 - MultiHop 2.4 GHz
- DXMxxx-xxR5 - MultiHop 900 MHz, 100 mW
- DXMxxx-xxR9 - MultiHop 900 MHz, (Australia)

Making changes to the baud or parity settings requires that you make the same settings to the Modbus Client Communications section within the DXM Configuration Software (**Settings › General**.

Disabling the serial port disables the ISM radio in the DXM1200. Selecting Transparent mode causes radio communications to be slower and denies access to device I/O register data.

DIP switch settings

	D1 Switches				D2 Switches			
Device Settings	**1**	**2**	**3**	**4**	**1**	**2**	**3**	**4**
Serial line baud rate 19200 OR User defined receiver slots	OFF*	OFF*						
Serial line baud rate 38400 OR 32 receiver slots	OFF	ON						
Serial line baud rate 9600 OR 128 receiver slots	ON	OFF						
Serial line baud rate Custom OR 4 receiver slots	ON	ON						
Parity: None			OFF*	OFF*				
Parity: Even			OFF	ON				
Parity: Odd			ON	OFF				
Disable serial (low power mode) and enable the receiver slots select for switches 1-2			ON	ON				

Continued on page 27

© Banner Engineering Corp. All rights reserved.
www.bannerengineering.com

Continued from page 26

	D1 Switches				D2 Switches			
Device Settings	**1**	**2**	**3**	**4**	**1**	**2**	**3**	**4**
Transmit power 900 MHz radios: 500 mW (27 dBm) 2.4 GHz radios: 65 mW (18 dBm) and 60 ms frame					OFF*			
Transmit power 900 MHz radios: 250 mW (24 dBm) 2.4 GHz radios: 65 mW (18 dBm) and 40 ms frame					ON			
Application mode: Modbus						OFF*		
Application mode: Transparent						ON		
MultiHop radio setting: Repeater							OFF	OFF
MultiHop radio setting: Client							OFF	ON
MultiHop radio setting: Server							ON	OFF
MultiHop radio setting: DXM LCD Menu Control							ON*	ON*

* Default configuration. The default settings for D2 DIP switches 3 and 4 are ON. This allows for forcing the device into client mode and DXM menu control for the radio power settings.

Application Mode

The MultiHop radio operates in either Modbus mode or transparent mode. Use the internal DIP switches to select the mode of operation. All MultiHop radios within a wireless network must be in the same mode.

Modbus mode uses the Modbus protocol for routing packets. In Modbus mode, a routing table is stored in each parent device to optimize the radio traffic. This allows for point-to-point communication in a multiple data radio network and acknowledgment/retry of radio packets. To access a radio's I/O, the radios must be running in Modbus mode.

In **transparent** application mode, all incoming packets are stored, then broadcast to all connected data radios. The data communication is packet-based and not specific to any protocol. The application layer is responsible for data integrity. For one-to-one data radios it is possible to enable broadcast acknowledgment of the data packets to provide better throughput. In transparent mode, there is no access to the radio's I/O.

Baud Rate and Parity

The baud rate (bits per second) is the data transmission rate between the device and whatever it is physically wired to. Set the parity to match the parity of the device you are wired to.

Disable Serial

Disable an unused local serial connection to reduce the power consumption of a data radio powered from the solar assembly or from batteries. All radio communications remain operational.

Transmit Power Levels/Frame Size

The 900 MHz data radios can be operated at 500 mW (27 dBm) or 250 mW (24 dBm). For most models, the default transmit power is 500 mW.

For 2.4 GHz radios, the transmit power is fixed at 65 mW (18 dBm) and DIP switch 5 is used to set the frame timing. The default position (OFF) sets the frame timing to 60 milliseconds. To increase throughput, set the frame timing to 40 milliseconds. For battery-powered devices, increasing the throughput decreases battery life.

Modbus Registers for the MultiHop Radio Board Module

The DX80 MultiHop client radio is a tree-based architecture device that allows for repeater radios to extend the wireless network. Each device in a MultiHop network is a Modbus device with a unique Modbus ID.

Modbus registers in a MultiHop network are contained within each individual radio device. To obtain Modbus register data from a MultiHop device, configure the DXM1200 to access each device across the wireless network as an individual Modbus server device.

© Banner Engineering Corp. All rights reserved.
www.bannerengineering.com

Example MultiHop Modbus registers with generic devices.

MulitHop Device	Modbus ID	Modbus Registers
DXM client radio	1	none
Server radio	11	Modbus register 1–16 are inputs, 501–516 are outputs
Repeater radio	12	Modbus register 1–16 are inputs, 501–516 are outputs
Server radio	15	Modbus register 1–16 are inputs, 501–516 are outputs

DIP Switch Settings for the Performance Gateway Radio Module

The 900 MHz radios have a high output option that will transmit at 500 mW (27 dBm). The low output option transmits at 250 mW (24 dBm). The 250 mW mode reduces the radio's range but improves the battery life in short-range applications. For 2.4 GHz models, this DIP switch is disabled. The transmit power for 2.4 GHz is fixed at about 65 mW EIRP (18 dBm).

DX80 Performance Gateway ISM radio devices include R1, R3, or R8 in the model number.

- DXMxxx-xxR1 - DX80 Performance 900MHz
- DXMxxx-xxR3 - DX80 Performance 2.4GHz
- DXMxxx-xxR8 - DX80 Performance 900MHz (Australia)

IMPORTANT: To adjust the transmit power on the Gateway radio, Banner recommends using the LCD menu (**System Conf › ISM Radio › RF CNTRL**).

DIP switch bank 1 and bank 2

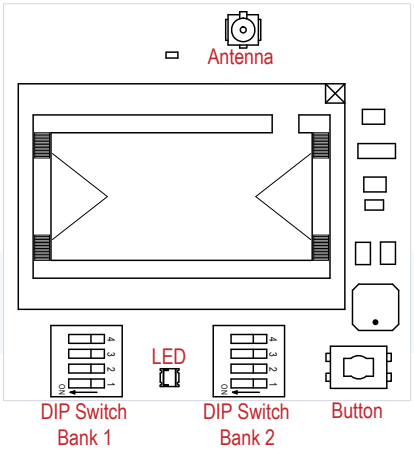

DIP switch settings for bank 1

DIP Switch 1	
OFF	500 mW (27 dBM) (default configuration; 900 MHz only)
ON	250 mW (24 dBm, 900 MHz models only), DX80 compatibility mode

Modbus Registers for the Performance Gateway Radio Module

The DX80 Performance Gateway is a star-based architecture device that contains all the Modbus registers for the wireless network within the Gateway. To access any input or output values within the entire wireless network, read the appropriate Modbus register from Gateway.

There are 16 Modbus registers allocated for each device in the wireless network. The first 16 registers (1–16) are allocated for the Gateway, the next 16 (17–32) are allocated for Node 1, the next 16 (33–48) are allocated for Node 2 and so forth. There are no inputs or outputs on the DXM embedded Gateway but the Modbus registers are still allocated for them.

Although only seven Nodes are listed in the table, the Modbus register numbering continues for as many Nodes as are in the network. For example, the register number for Node 10, I/O point 15 , is 175. Calculate the Modbus register number for each device using the equation:

```
Register Number = I/O# + (Node# × 16)
```


© Banner Engineering Corp. All rights reserved.
www.bannerengineering.com

Modbus holding registers

I/O Point	Gateway	Node 1	Node 2	Node 3	Node 4	Node 5	Node 6	Node 7
1	1	17	33	49	65	81	97	113
2	2	18	34	50	66	82	98	114
3	3	19	35	51	67	83	99	115
4	4	20	36	52	68	84	100	116
5	5	21	37	53	69	85	101	117
6	6	22	38	54	70	86	102	118
7	7	23	39	55	71	87	103	119
8	8	24	40	56	72	88	104	120
9	9	25	41	57	73	89	105	121
10	10	26	42	58	74	90	106	122
11	11	27	43	59	75	91	107	123
12	12	28	44	60	76	92	108	124
13	13	29	45	61	77	93	109	125
14	14	30	46	62	78	94	110	126
15	15	31	47	63	79	95	111	127
16	16	32	48	64	80	96	112	128

Access all wireless network registers by reading Modbus ID 1

DX80 Device	Modbus ID	Modbus Registers
DXM Gateway radio	1	Modbus registers 1–8 are inputs, 9–16 are outputs
Node 1	-	Modbus registers 17–24 are inputs, 25–32 are outputs
Node 2	-	Modbus registers 33–40 are inputs, 41–48 are outputs
Node 3	-	Modbus registers 49–56 are inputs, 57–64 are outputs

Alternative Modbus Register Organization

The Sure Cross DX80 Alternative Modbus Register Organization registers are used for reordering data registers to allow host systems to efficiently access all inputs or outputs using a single Modbus command. The register groups include the input/output registers, bit-packed registers, and analog registers. This feature is only available with the Performance models using version 3 or newer of the LCD firmware code.

Alternative Modbus register organization

Name	Modbus Register Address (Decimal)
Inputs and Outputs, in order by device	2201 through 4784
Discrete Bit Packed (Status, Discrete Inputs, Discrete Outputs)	6601 through 6753
Analog Inputs (1–8) and Analog Outputs (1–8)	6801 through 9098

Input Registers and Outputs Registers

Modbus registers 2201 through 2584 are used to organize all inputs together.

In this format, users can sequentially read all input registers using one Modbus message. Modbus registers 4401 through 4784 organize all outputs together to allow users to sequentially write to all output registers using one Modbus message.

© Banner Engineering Corp. All rights reserved.
www.bannerengineering.com

Input and output registers

Inputs (2201–2584)		Outputs (4401–4784)	
Modbus Register Address (Decimal)	**16-bit Register Value**	**Modbus Register Address (Decimal)**	**16-bit Register Value**
2201–2208	Gateway Inputs 1 through 8	4401–4408	Gateway Outputs 1 through 8
2209–2216	Node 1 Inputs 1 through 8	4409–4416	Node 1 Outputs 1 through 8
2217–2224	Node 2 Inputs 1 through 8	4417–4424	Node 2 Outputs 1 through 8
...	...	...	...
2577–2584	Node 47 Inputs 1 through 8	4777–4784	Node 47 Outputs 1 through 8

Refer to your device's datasheet for a list of the active inputs and outputs. Not all inputs or outputs listed in this table may be active for your system.

Discrete Bit-Packed Registers

Discrete bit-packed registers include the discrete status registers, discrete inputs, and discrete outputs.

Bit packing involves using a single register, or range of contiguous registers, to represent I/O values.

When networks use similar Nodes to gather data using the same I/O registers for each Node, discrete data from multiple Nodes can be bit packed into a single register on the Gateway. The bit-packed data is arranged by I/O point starting at Modbus register 6601. For example, Discrete IN 1 for all the Nodes in the network is stored in three contiguous 16-bit registers.

The most efficient way to read (or write) discrete data from a Sure Cross® DX80 Gateway is by using these bit-packed registers because users can read or write registers for all devices using one Modbus message. The following registers contain discrete bit-packed I/O values for the Gateway and all Nodes. Values are stored first for the Gateway, then for each Node in order of Node address.

Discrete bit-packed register addresses and bit positions

Bit-Packed Device Status Registers

	Bit Position															
Register Address	15	14	13	12	11	10	9	8	7	6	5	4	3	2	1	0
6601	Node 15	Node 14	Node 13	Node 12	Node 11	Node 10	Node 9	Node 8	Node 7	Node 6	Node 5	Node 4	Node 3	Node 2	Node 1	Gateway
6602	Node 31	Node 30	Node 29	Node 28	Node 27	Node 26	Node 25	Node 24	Node 23	Node 22	Node 21	Node 20	Node 19	Node 18	Node 17	Node 16
6603	Node 47	Node 46	Node 45	Node 44	Node 43	Node 42	Node 41	Node 40	Node 39	Node 38	Node 37	Node 36	Node 35	Node 34	Node 33	Node 32

Bit-Packed Discrete Input 1

	Bit Position															
Register Address	15	14	13	12	11	10	9	8	7	6	5	4	3	2	1	0
6611	Node 15	Node 14	Node 13	Node 12	Node 11	Node 10	Node 9	Node 8	Node 7	Node 6	Node 5	Node 4	Node 3	Node 2	Node 1	Gateway
6612	Node 31	Node 30	Node 29	Node 28	Node 27	Node 26	Node 25	Node 24	Node 23	Node 22	Node 21	Node 20	Node 19	Node 18	Node 17	Node 16
6613	Node 47	Node 46	Node 45	Node 44	Node 43	Node 42	Node 41	Node 40	Node 39	Node 38	Node 37	Node 36	Node 35	Node 34	Node 33	Node 32

Bit-Packed Discrete Output 1

	Bit Position															
Register Address	15	14	13	12	11	10	9	8	7	6	5	4	3	2	1	0
6691	Node 15	Node 14	Node 13	Node 12	Node 11	Node 10	Node 9	Node 8	Node 7	Node 6	Node 5	Node 4	Node 3	Node 2	Node 1	Gateway
6692	Node 31	Node 30	Node 29	Node 28	Node 27	Node 26	Node 25	Node 24	Node 23	Node 22	Node 21	Node 20	Node 19	Node 18	Node 17	Node 16
6693	Node 47	Node 46	Node 45	Node 44	Node 43	Node 42	Node 41	Node 40	Node 39	Node 38	Node 37	Node 36	Node 35	Node 34	Node 33	Node 32

Discrete bit-packed registers for inputs and outputs

Inputs		Outputs	
Modbus Register Address (Decimal)	**Description (Inputs)**	**Modbus Register Address (Decimal)**	**Description (Outputs)**
6601–6603	Status for all devices		
6611–6613	Input 1 from all devices	6691–6693	Output 1 from all devices
6621–6623	Input 2 from all devices	6701–6703	Output 2 from all devices

Continued on page 31

© Banner Engineering Corp. All rights reserved.
www.bannerengineering.com

Continued from page 30

Inputs		Outputs	
Modbus Register Address (Decimal)	Description (Inputs)	Modbus Register Address (Decimal)	Description (Outputs)
6631–6633	Input 3 from all devices	6711–6713	Output 3 from all devices
6641–6643	Input 4 from all devices	6721–6723	Output 4 from all devices
6651–6653	Input 5 from all devices	6731–6733	Output 5 from all devices
6661–6663	Input 6 from all devices	6741–6743	Output 6 from all devices
6671–6673	Input 7 from all devices	6751–6753	Output 7 from all devices
6681–6683	Input 8 from all devices		

Status registers (6601–6603) contain a bit-packed representation defining the devices that are operational in the wireless system. Each bit indicates Node in Sync (1) or Node Not in Sync (0).

A one (1) written to the Discrete Status Register area indicates the device is active within the wireless system. A zero (0) indicates the device is not active within the wireless network.

Input registers from all devices use Modbus registers 6611 through 6683 to organize the least significant bit into a sequential array of registers. The first register contains the least significant bit from the input values for the Gateway through Node 15. The second register contains the input values for Node 16 through Node 31, and the third register contains the input values for Nodes 32 through 47.

For discrete inputs, only the least significant bit is used. For analog inputs, the least significant bit indicates if the analog value is above or below the selected threshold value (when using the threshold parameter configured in the User Configuration Software). For example, a least significant bit of one (1) indicates the analog value is above the selected threshold value. A least significant bit of zero (0) indicates the analog value is below the threshold value.

Output registers from all devices use Modbus registers 6691 through 6753 to organize the least significant bit into a sequential array of registers. Output 8 (I/O point 16) cannot be written using the discrete format.

Analog 16-Bit Registers (Registers 6801 through 9098)

The most efficient way to read (or write) analog data from a Gateway is by using these 16-bit analog registers. Most networks consist of similar Nodes reporting data using the same I/O registers for each Node. For this reason, the analog data is arranged by I/O point using Modbus registers 6801 through 9098.

For example, Input 1 for Gateway and all Nodes is stored in the first 48 contiguous blocks of 16-bit analog registers, beginning with register 6801.

In this format, users can read a 16-bit holding register for all devices or write to a register for all devices using one Modbus message. Using these registers is the most efficient way to read all status registers, read all analog inputs, or write all analog outputs.

The following registers contain analog I/O values for the Gateway and all Nodes. Values are stored first for the Gateway, then for each Node in order of Node address.

Analog input and output registers

Inputs		Outputs	
Modbus Register Address (Decimal)	Description (Inputs)	Modbus Register Address (Decimal)	Description (Outputs)
6801	Input 1 for Gateway	8001	Output 1 for Gateway
6802	Input 1 for Node 1	8002	Output 1 for Node 1
6803	Input 1 for Node 2	8003	Output 1 for Node 2
...	...	...	...
6951	Input 2 for Gateway	8151	Output 2 for Gateway
6952	Input 2 for Node 1	8152	Output 2 for Node 1
6953	Input 2 for Node 2	8153	Output 2 for Node 2

Continued on page 32

© Banner Engineering Corp. All rights reserved.
www.bannerengineering.com

Continued from page 31

Inputs		Outputs	
Modbus Register Address (Decimal)	Description (Inputs)	Modbus Register Address (Decimal)	Description (Outputs)
...	...	...	...
7101	Input 3 for Gateway	8301	Output 3 for Gateway
7102	Input 3 for Node 1	8302	Output 3 for Node 1
7103	Input 3 for Node 2	8303	Output 3 for Node 2
...	...	...	...
7851	Input 8 (Status Register) for Gateway	9051	Output 8 for Gateway
7852	Input 8 (Status Register) for Node 1	9052	Output 8 for Node 1
7853	Input 8 (Status Register) for Node 2	9053	Output 8 for Node 2
...	...	...	...

For example, 6801 contains the input 1 value for the Gateway, 6802 contains the input 1 value for Node 1, and 6848 contains the input 1 value for Node 47.

© Banner Engineering Corp. All rights reserved.
www.bannerengineering.com

Chapter Contents

DIP Switch Settings for the Base Board 34
Ethernet 35
USB 35
Internal Local Registers (ID 199) for the DXM700, DXM1000, and DXM1200 35
Modbus RTU Client 38

Chapter 4 DXM1200 Processor Connections

DXM1200 base board

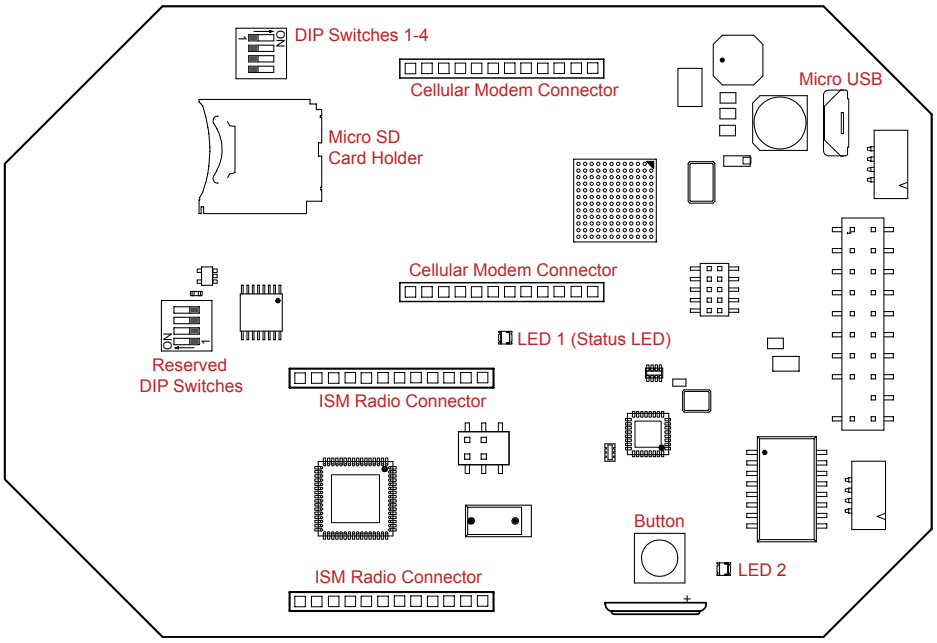

© Banner Engineering Corp. All rights reserved.
www.bannerengineering.com

DXM1200 base board, cellular modem board, and ISM radio board

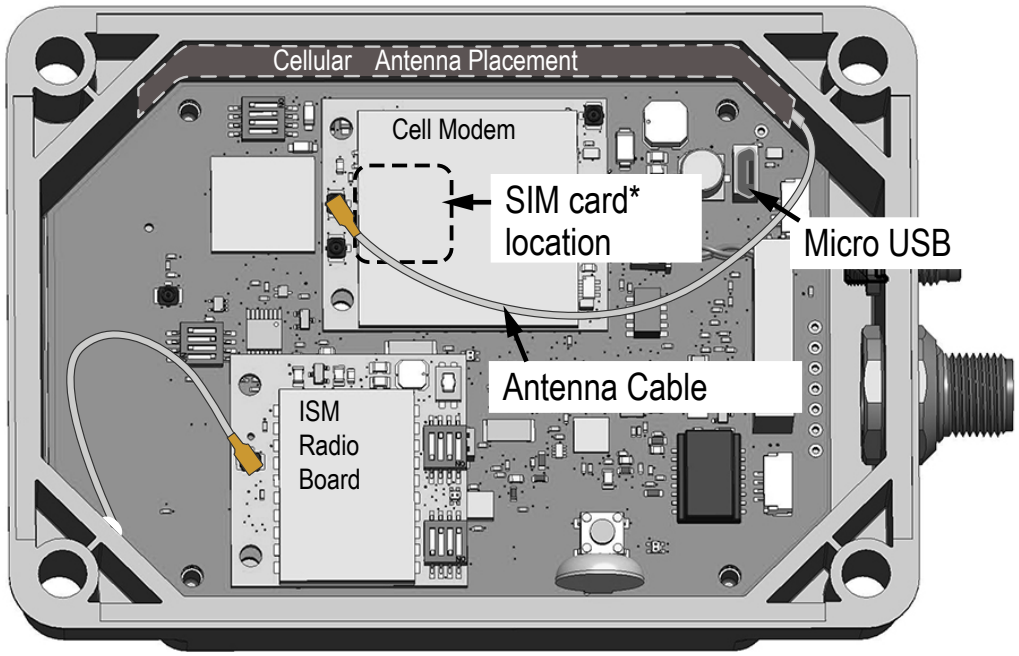

*SIM card is located on the underside of installed modem

Button Operation

The button is used for special functions, as defined in the configuration or advanced configuration instructions.

LED Operation

LED1 flashes to indicate the processor board is running.

The LED starts flashing about 10 seconds after power is applied and a network connection is present. Without an ethernet network connection, the LED starts to flash after about 40 seconds.

Cellular Modem Connection

Install the cellular modem onto the board with the cellular modem's U.FL connector as shown. Only install/remove a cellular modem when the power to the device is disconnected.

DIP Switch Settings for the Base Board

After making changes to the DIP switch settings, cycle power to the device.

DIP switches for the base board

Settings	DIP Switches			
	1	2	3	4
Ethernet port enabled (default setting)	OFF *			
Ethernet port disabled	ON			
LCD enabled (default setting)		OFF *		
LCD disabled		ON		
Not used (default setting)			OFF *	
XML configuration file active (default)				OFF *
XML configuration file bypassed				ON

Bypass XML

Turn on to have the XML file ignored at boot time. This is useful for ignoring a corrupt or questionable XML configuration file. After the device is running, a new XML file can be loaded using the DXM configuration tool.

Turn on to stop the processor from executing the defined configuration. This is useful if the loaded configuration is using all the processing time and not allowing DXM Configuration Tool operations.

The factory default position is OFF.

© Banner Engineering Corp. All rights reserved.
www.bannerengineering.com

Disable Ethernet Port

Set to ON to power down the Ethernet interface. Disabling the unused Ethernet port reduces power consumption.

The factory default position is OFF.

Disable LCD Display

Set to ON to disable the LCD. This DIP switch should be ON when the LCD board is not connected.

The factory default position is OFF.

Ethernet

Before applying power to the DXM1200, verify the Ethernet cable is connected.

The number of times the processor attempts to connect to the Ethernet network is configured in the DXM Configuration Software (**Settings › Network Ethernet Connection Acquisition**). The default setting is two retries one minute after the device boots up and another retry two minutes later.

The Ethernet connection supports the DXM Configuration Software, Modbus/TCP, and EtherNet/IP. ScriptBasic also has access to Ethernet for custom programming. Use the software or LCD menu system to configure the characteristics of the Ethernet connection, including the IP address. Any parameters not changeable from the menu system are configurable from the configuration software.

Ethernet parameter changes entered through the LCD menu override the XML configuration parameters. To return to using the network settings in the XML configuration file, remove the Ethernet parameters defined by the LCD menu using the **System Config › Ethernet › Reset** menu.

USB

A micro USB port is available inside the DXM1200.

The micro USB port can be used to configure the DXM, but a micro USB cable is not provided with the device.

Internal Local Registers (ID 199) for the DXM700, DXM1000, and DXM1200

The main storage elements for the DXM1200 are its local registers, which can store 4-byte values that result from register mapping, action rules, or ScriptBasic commands.

Local registers updated from Modbus transactions are restricted to a 16-bit data value to follow standard Modbus holding register definition.

The local registers defined in action rules must all be within the same register group. For example, an action rule cannot have inputs from an integer group with the result register defined as a floating point register. To move between integers and floats, use the Register Copy Rule.

- Local registers 1–850 and 5001–7000 are 32-bit integer registers
- Local registers 851–900 and 7001–8000 are non-volatile 32-bit integer registers
- Local registers 901-1000 are reserved for internal use
- Local registers 1001–5000 are floating point format numbers, each address stores half of a floating point number; for example, registers 1001 and 1002 store the first full 32-bit floating point number
- Local registers 10000 and higher are read-only virtual registers; virtual registers collect various system-level data

Modbus registers for internal local registers (Modbus ID 199)

Local Registers	Type	Description
1–845	32-bit integer	Local data registers
846–849	32-bit integer	Reset, Constant, Timer
851–900	32-bit non-volatile integer	Data flash, non-volatile
901–1000		Reserved for internal use
1001–5000	Floating point	Floating point registers, local data registers
5001–7000	32-bit integer	Local data registers
7001–8000	32-bit non-volatile integer	Data flash, non-volatile

Continued on page 36

© Banner Engineering Corp. All rights reserved.
www.bannerengineering.com

Continued from page 35

Local Registers	Type	Description
> 10000		Read-only virtual registers, system-level data

Local registers 1–850 and 5001–7000 (Internal Processor Memory, 32-bit, Unsigned)—The local registers are the main global pool of registers. Local registers are used as basic storage registers and as the common data exchange mechanism. External Modbus device registers can be read into the local registers or written from the local registers. The DXM1200, as a Modbus client device or a Modbus server device, exchanges data using the local registers. Modbus over Ethernet (Modbus/TCP) uses the local registers as the accessible register data.

Local registers 851–900 and 7001–8000 (Data Flash, Non-volatile, 32-bit, Unsigned)—The top 50 local registers are special non-volatile registers. The registers can store constants or calibration-type data that must be maintained when power is turned off. This register data is stored in a data flash component that has a limited write capability of 100,000 cycles, so these registers should not be used as common memory registers that change frequently.

Local registers 1001–5000— These local registers are paired together to store a 32-bit IEEE floating point format number in big-endian format. Registers 1001 [31:16], 1002 [15:0] store the first floating point value; registers 1003, 1004 store the second floating point number. There are a total of 2000 floating point values; they are addressed as two 16-bit pieces to accommodate the Modbus protocol. Use these registers when reading/writing external devices that require Modbus registers in floating-point format. Since Modbus transactions are 16 bits, the protocol requires two registers to form a 32-bit floating point number.

Virtual registers—The DXM1200 has a small pool of virtual registers that show the internal variables of the main processor. Some register values will be dependent upon the configuration settings of the DXM1200. Do not use **Read Rules** to move virtual local registers data into local registers. Use the **Action Rule › Register Copy** function to move virtual local registers into local registers space (1–850).

Modbus registers for virtual registers

Registers	Definition	
10001	GPS latitude direction (N, S, E, W)	GPS Coordinate Data if the DXM is configured to read an external GPS unit.
10002	GPS latitude	
10003	GPS longitude direction (N, S, E, W)	
10004	GPS longitude	
10011–10012	Resync timer	Engineering use
10013–10014	Resync timer rollover	Engineering use
10015–10016	Reboot cause (Restart Codes above)	Reboot Type
10017–10018	Watchdog reset count	Counter to track how many resets have been caused by the Watchdog
10021	IO Board Battery Voltage (mV)	mV (Not applicable for DXM700 or DXM1200 models)
10022	IO Board - Incoming Supply Voltage (mV)	mV (Not applicable for DXM700 or DXM1200 models)
10023	IO Board Voltage Cut-off Feature	0—No successful readings (Not applicable for DXM700 or DXM1200 models) 1—Normal range 2—Cut-off engaged
10024	IO Board - Battery Charging Current (mA)	mA (Not applicable for DXM700 or DXM1200 models)
10025–10026	Http Push SSL Acquires	Statistical counts of connections, disconnections and forced disconnects when the DXM1200 creates a connection using SSL/TLS (Encrypted connections)
10027–10028	Http Push SSL Releases	
10029–10030	Http Push SSL Forced Releases	
10031–10032	Http Push Attempts	Statistical counts of connections, disconnections and forced disconnects when the DXM controller creates a connection using HTTP non-encrypted
10033–10034	Http Push Successes	
10035–10036	Http Push Failures	
10037–10038	Http Push Last Status	Last DXM1200 push status 0 = Initial state, no push attempt as finished yet 1 = Attempt complete 2 = Attempt aborted

Continued on page 37

© Banner Engineering Corp. All rights reserved.

Continued from page 36

Registers	Definition	
10039–10040	Cellular Strength, BER	Cellular signal strength. Value range: 0–31 0 = –113 dBm or less 1 = –111 dBm 2–30 = –109 dBm through –53 dBm in 2 dBm steps 31 = –51 dBm or greater 99 = not known or not detectable; BER not used
10055–10056	Alarms, smtp, attempts	Email attempts (only available with some model configurations)
10057–10058	Alarms, smtp, fails	Email failures (only available with some model configurations)
10100	Number of read maps in default	Read Map statistics
10101	Number of read map successes	
10102	Number of read map timeouts	
10103	Number of read map errors	
10104	Read map success streak	
10105	Number of write map successes	Write Map statistics
10106	Number of write map timeouts	
10107	Number of write map errors	
10108	Write map success streak	
10109	Number of passthrough successes	API message passing statistics
10110	Number of passthrough timeouts	
10111	Number of passthrough errors	
10112	Passthrough success streak	
10113	Number of 43 buffer successes	DX80 Gateway automatic messaging buffer statistics
10114	Number of 43 buffer timeouts	
10115	Number of 43 buffer errors	
10116	43 buffer success streak	
11000	Read map success count	Read/Write maps statistics
12000	Write map success count	
13000	Read map timeout count	
14000	Write map timeout count	
15000	Read map error count	
16000	Write map error count	
17000	Read map success streak	
18000	Write map success streak	
19000	Read map is in default	

TCP Client Statistics--The "x" represents the socket 0 through 4. The flex socket is not used. This range repeats for the next socket.

Register	Definition
2x001	Socket x connection attempts (20001 is the first socket, 21001 is the second socket...)
2x003	Socket x connections
2x005	Socket x disconnections
2x007	Socket x transmits
2x009	Socket x receives
2x011	Socket x resolver attempts (reserved)
2x013	Socket x resolvers (reserved)
2x015–2x020	Reserved

Continued on page 38

© Banner Engineering Corp. All rights reserved.
www.bannerengineering.com

Continued from page 37

Register	Definition
2x021	Socket x Rule 0 transmits
2x023	Socket x Rule 0 receives
2x025	Socket x Rule 0 timeouts
2x027	Socket x Rule 0 broadcasts
2x029	Reserved
2x031	Socket x Rule 1 transmits
2x033	Socket x Rule 1 receives
2x035	Socket x Rule 1 timeouts
2x037	Socket x Rule 1 broadcasts
2x039	Reserved

Reset Codes—The reset codes are in virtual register 11015 and define the condition of the last restart operation.

Reset Code	Definition
0	Undefined
1	Unknown
2	General
3	Brownout
4	Watchdog
5	User
6	Software
7	Return from backup mode

Modbus RTU Client

The DXM1200 can be a Modbus RTU client device to other server devices.

The DXM1200 uses the primary RS-485 port as a Modbus RTU client to control external server devices. All wired devices connected to the client RS-485 port must be server devices. As a Modbus RTU client device, the DXM1200 controls external servers connected to the primary RS-485 port, the local ISM radio, local I/O base board, and the local display board.

Use the DXM Configuration Software to define operational settings for both the Modbus RTU client port and the Modbus RTU server port.

The basic communications parameters for the RS-485 ports are set in the DXM Configuration Software and are saved in the XML configuration file. All basic settings are available under **Settings › System** screen.

Client port parameters include:

- **Baud rate** and **parity**
- Set the **Communications Timeout** parameter to cover the expected time for messages to be sent throughout the wireless network. For the DXM1200, the **Communications Timeout** parameter is the maximum amount of time the DXM1200 should wait after a request is sent until the response message is received from the Modbus server device.
- **Delay Between Messages** sets the minimum wait time from the end of a Modbus transaction to the beginning of the next Modbus transaction.

© Banner Engineering Corp. All rights reserved.
www.bannerengineering.com

Settings > General screen

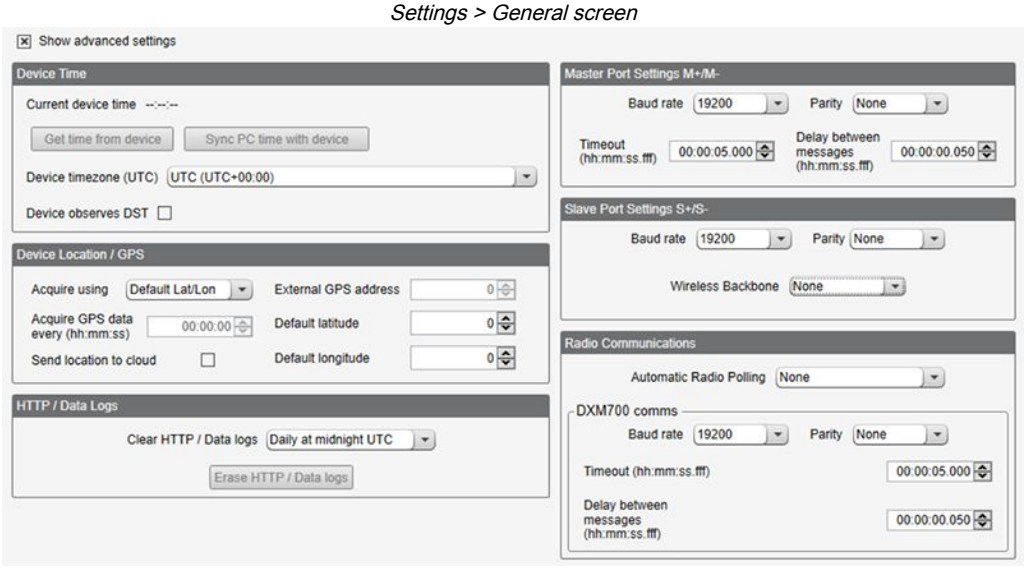

© Banner Engineering Corp. All rights reserved.
www.bannerengineering.com

Chapter Contents

Cellular Modem Board for LTE 40
Cellular Power Requirements 40
Using the DXM Cellular Modem 40

Chapter 5 Cellular Modem Boards

Cellular Modem Board for LTE

The 4G LTE cellular modem is an optional accessory that is installed on the two 12-pin sockets.

Plug the cellular modem into the right socket (when viewing the internal PCB with the connectors at the bottom). The SIM card slides into the socket on the back of this board.

Cellular modem board (optional)

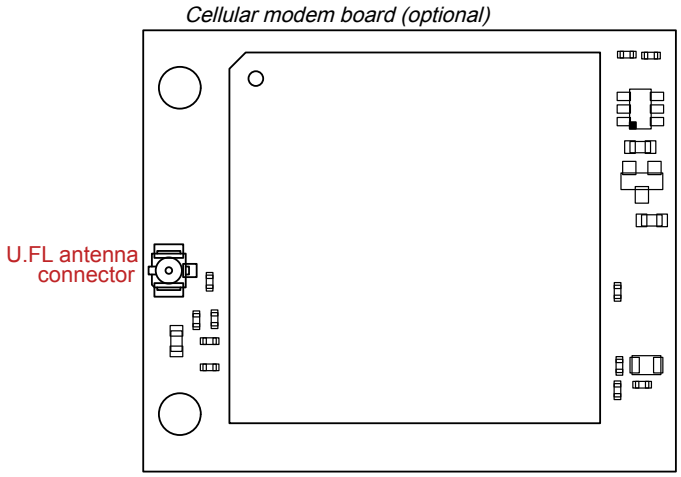

Cellular Power Requirements

If the incoming voltage drops below 11.2 V DC, the cellular modem does not turn on and will not turn on until the voltage is above 11.8 V DC.

Using the DXM Cellular Modem

The DXM cellular modem provides a remote network connectivity solution for the DXM1200.

To use the cellular modem:

1. Verify the cellular modem is installed and the correct antenna is connected to the cellular antenna port.
2. Activate the cellular service.
3. Configure the DXM1200 to use the cellular network as the network interface.

Activating a Cellular Modem

Follow these basic steps, as detailed in this document, to activate the cellular capabilities of your DXM Controller.

1. Purchase a cellular modem kit from Banner Engineering Corp.
2. Install the cellular modem, connect the antenna cable, and connect the cellular antenna.
3. Activate a cellular plan to the SIM card, then insert the SIM card into the cellular modem.
4. Configure the DXM to use the cellular modem.

Purchase one of these cellular modem kit models

Cellular Kit Model	Kit Description	Important Notes
SXI-CATM1VZW-001	**Verizon CAT M1** cellular modem using Telit ME910 modem kit (Verizon part number SXIM1V). Includes a cellular modem, SIM card, internal adhesive antenna, external SMA antenna, and antenna cable. The SIM card is specific to the LTE-M technology and cannot be used in other cellular modems. Requires a LTE Verizon cellular wireless plan attached to the ICCID (SIM card) number and IMEI (International Mobile Equipment Identity) number. Cellular plans can be purchased through celldata.bannercds.com.	This cellular modem kit is for use in applications that require monthly data usage approaching 50 MB or 250 MB with push intervals no more frequent than every 10 minutes. This modem is only for use in the **contiguous United States** region. Please visit our support site for more details on coverage areas and cellular plan pricing.

Continued on page 41

© Banner Engineering Corp. All rights reserved.

Continued from page 40

Cellular Kit Model	Kit Description	Important Notes
SXI-CATM1ATT-001	**AT&T CAT M1** cellular modem using Telit ME910 modem kit (AT&T part number SXIM1A). Includes a cellular modem, SIM card, internal adhesive antenna, external SMA antenna, and antenna cable. The SIM card is specific to the LTE-M technology and cannot be used in other cellular modems. Requires a LTE AT&T cellular wireless plan attached to the ICCID (SIM card) number and IMEI (International Mobile Equipment Identity) number. Cellular plans can be purchased through celldata.bannercds.com.	This cellular modem kit is for use in applications that require monthly data usage approaching 50 MB or 250 MB with push intervals no more frequent than every 10 minutes. This modem is only for use in the **North American** region. Please visit our support site for more details on coverage areas and cellular plan pricing.
SXI-CATM1WW-001	**Worldwide CAT M1** cellular modem using Telit ME910 model kit. Includes a cellular modem, SIM card, internal adhesive antenna, external SMA antenna, and antenna cable. The SIM card is specific to the LTE-M/NB-IoT technology and cannot be used in other cellular modems. Requires an LTE cellular plan attached to the ICCID (SIM card) number and IMEI (International Mobile Equipment Identity) number. Cellular plans can be purchased through celldata.bannercds.com or a local roaming SIM provider.	This cellular modem kit is for use in applications that require monthly data usage approaching 50 MB or 250 MB with push intervals no more frequent than every 10 minutes. This modem is only for use in the **European** region within those countries that are members of the EU/EEA and adopt RED/CE compliant products. Please visit our support site for more details on coverage areas and cellular plan pricing.
SXI-LTE-001	**Verizon LTE** cellular modem using Telit LE910 modem kit (Verizon part number SENSX002). Includes a cellular modem, SIM card, antenna, and antenna cable. The SIM card is specific to the LTE technology and cannot be used in other cellular modems. Requires a LTE Verizon cellular wireless plan attached to the ICCID (SIM card) number and IMEI (International Mobile Equipment Identity) number. Cellular plans can be purchased through celldata.bannercds.com or a local roaming SIM provider.	This cellular modem is only used with the Wireless Network Bridge Hub (NET-HUB). Please visit our support site for more details on coverage areas and cellular plan pricing.

For additional information, refer to the Banner Cloud Data Services support center (support.bannercds.com). The support center includes video tutorials, product documentation, technical notes, and links to download configuration software.

IMPORTANT: Only the DXM100 and DXM150 models in conjunction with an SXI-LTE-001 (obsolete) cellular modem can offer SMS/text messaging capabilities directly from the device. Contact a support specialist at Banner Engineering for configuration instructions, or SMS/text messaging can be delivered using the Banner CDS web service from any DXM model.

Install the Cellular Modem (DXM100, 150, 700, and 1000 Models)

Follow these steps to install the cellular modem and antenna cable.

IMPORTANT:

- **Electrostatic discharge (ESD) sensitive device**
- ESD can damage the device. Damage from inappropriate handling is not covered by warranty.
- Use proper handling procedures to prevent ESD damage. Proper handling procedures include leaving devices in their anti-static packaging until ready for use; wearing anti-static wrist straps; and assembling units on a grounded, static-dissipative surface.

Installing the cellular modem

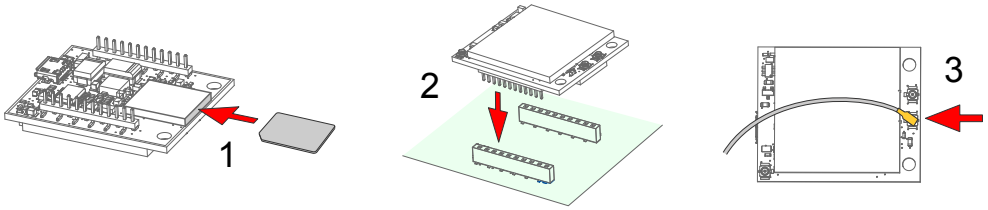

1. SIM cards come in a credit card sized carrier. Carefully snap it out of the carrier.
2. Make note of the IMEI number of the cellular modem and the ICCID number of the SIM card.

   The numbers can be found on the cellular modem and the SIM card or SIM card carrier. You will need the SIM number to associate a wireless plan to this SIM card.

© Banner Engineering Corp. All rights reserved.
www.bannerengineering.com

3. Insert the SIM card into the socket on the underside of the cellular modem while ensuring the conductive pads on the SIM card are interfacing with the terminals of the modem.

   There is a matching notch in the socket and SIM card that will only allow the SIM to be inserted with one orientation. Do not force the SIM card into the socket.

4. Orient the cellular modem according to the pin layout.

DXM100, 150, and 1000

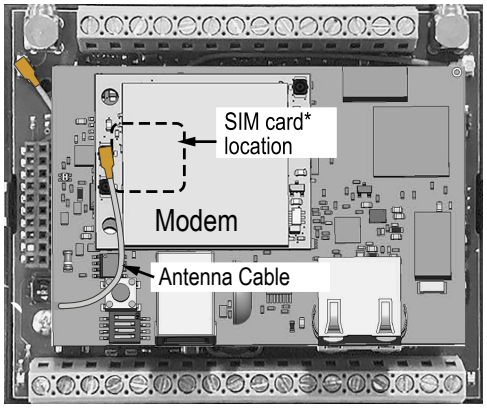

*SIM card is located on the underside of installed modem

DXM700

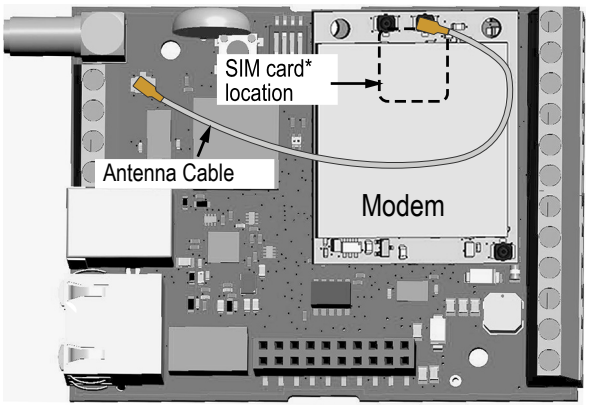

*SIM card is located on the underside of installed modem

   - For the DXM100, DXM150, and DXM1000 models—Install the cellular modem board onto the processor board as shown. Use the diagram to verify the orientation is correct.
   - For the DXM700 models—Install the cellular modem board onto the base board as shown. Use the diagram to verify the orientation is correct.

   a. Verify the pins are properly aligned.
   b. Verify the hole in the cell modem aligns with the hole on the DXM board.
   c. Firmly press the modem into the 24-pin socket.

5. Attach the antenna cable between the cellular modem board to the base board as shown.
6. Install the external cellular antenna on the DXM's SMA connector located next to the antenna cable.

Install the Cellular Modem (DXM1200 Models)

Follow these steps to install the cellular modem and antenna cable.

IMPORTANT:

- **Electrostatic discharge (ESD) sensitive device**
- ESD can damage the device. Damage from inappropriate handling is not covered by warranty.
- Use proper handling procedures to prevent ESD damage. Proper handling procedures include leaving devices in their anti-static packaging until ready for use; wearing anti-static wrist straps; and assembling units on a grounded, static-dissipative surface.

Installing the cellular modem

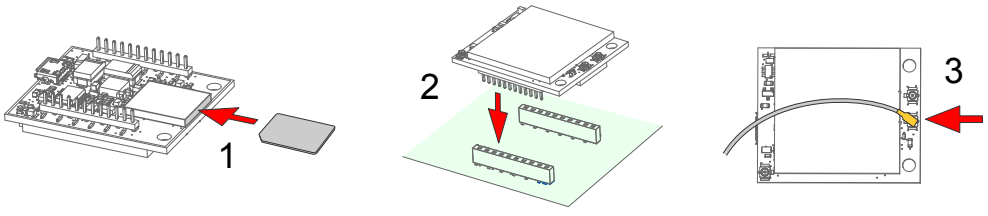

1. SIM cards come in a credit card sized carrier. Carefully snap it out of the carrier.
2. Make note of the IMEI number of the cellular modem and the ICCID number of the SIM card.

© Banner Engineering Corp. All rights reserved.
www.bannerengineering.com

The numbers can be found on the cellular modem and the SIM card or SIM card carrier. You will need the SIM number to associate a wireless plan to this SIM card.

3. Insert the SIM card into the socket on the underside of the cellular modem while ensuring that the conductive pads on the SIM card are interfacing with the terminals of the modem.

   There is a matching notch in the socket and SIM card that will only allow the SIM to be inserted with one orientation. Do not force the SIM card into the socket.

4. Apply the internal antenna as shown paying attention to the antenna cable position.
   a. Pull back the adhesive protective paper from the middle of the antenna, only exposing the middle portion. Antenna application is easier if just a small middle portion of the adhesive is uncovered.
   b. Center the antenna on the side wall. Use the exposed adhesive in the middle of the antenna to hold the antenna in place while aligning the antenna to the full length of the housing.
   c. Slowly peel off the paper backing exposing the adhesive and stick to the plastic housing. The antenna should run below the rim of the housing.
   d. Press firmly.

5. Orient the cellular modem according to the diagram below.

   The cellular modem is inserted into the main board with the antenna cable from the applied internal antenna attached to the cellular modem PCB.

Internal view of a DXM1200

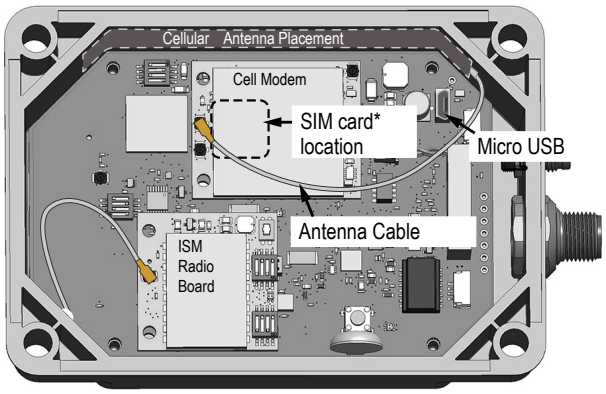

*SIM card is located on the underside of installed modem

   a. Verify the pins are properly aligned.
   b. Verify the hole in the cell modem aligns with the hole on the DXM board.
   c. Firmly press the modem into the 24-pin socket.

6. Attach the antenna cable between the cellular modem board to the base board. The antenna cable uses the top antenna connection.

Activate a 4G LTE CAT M1 Cellular Plan

Activate a cellular plan for your DXM1200 using the Banner Cloud Data Services website.

1. Go to celldata.bannercds.com to purchase cellular data plans.
2. If you have previously created an account, click **Login** and enter your username and password to continue.
3. If you are creating a login for the first time:
   a. Select the region in which the device will operate.
   b. Select the cellular subscription plan. Please use the calculator and regional coverage information to determine the plan needed for your device (https://www.bannerengineering.com/us/en/products/wireless-sensor-networks/iot-cloud-cellular-data-services/cellular-data-plans/Service-Plan-Calculator.html).
   c. Create a username and password (use an email address for the username).
   d. Enter your payment information, mailing address, agree to the terms and conditions.
4. Go to the **My Services and Equipment** section.
5. Enter the SIM Number (ICCID) and the Module Number (IMEI).

   The **ICCID** is the 20-digit number of the SIM, the bottom barcode number on the SIM card carrier. If the carrier card is not available, the ICCID is also printed on the SIM card, but must be removed from its socket to be read. The **IMEI** is the 15-digit number on top of the 4G LTE device.

6. Click **Activate**.

© Banner Engineering Corp. All rights reserved.
www.bannerengineering.com

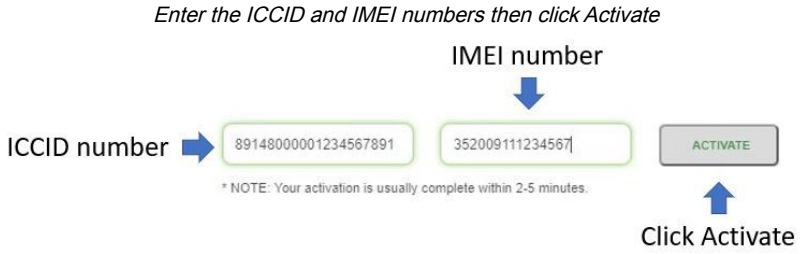

Although new activations are typically functional in 20 minutes or less, it may take up to 24 hours for the cellular plan to become active on the wireless network.

Activate a Worldwide 4G LTE MNB-IOT Cellular Plan (RED-CE)

The Worldwide 4G LTE-M/NB-IOT cellular modem is operational in those European countries that are members of the EU/EEA and adopt RED/CE-compliant products.

An international roaming SIM is provided with the Worldwide module and may be activated following the steps listed in "Activate a 4G LTE CAT M1 Cellular Plan" on page 43. However, there may be regions that are not covered by the provided SIM card. In this case, a local SIM card must be activated and operated with this device to acquire connectivity services.

1. Work with the local Banner technical support person to identify and purchase machine-to-machine (M2M) (data plan only) SIM cards in 3FF 'micro' form factor.

   Typical monthly data use will be 20-50 MB per month. When choosing a plan, pay close attention to data rates.
2. When activating the SIM, note the Access Point Name (APN) that the SIM provider states to use with their SIM.

   The IMEI is the 15-digit number on top of the cell module PCB, below the words **Telit ME910G1-WW** and above the barcode. The ICCID is the 20-digit number printed on the SIM card itself.

Configure the DXM Controller for a Cellular Modem

Use the DXM Configuration Software to create a configuration using a cellular connection.

> **IMPORTANT:** Only the DXM100 and DXM150 models in conjunction with an SXI-LTE-001 (obsolete) cellular modem can offer SMS/text messaging capabilities directly from the device. Contact a support specialist at Banner Engineering for configuration instructions, or SMS/text messaging can be delivered using the Banner CDS web service from any DXM model.

1. Go to the **Settings › Cloud Services** screen.
2. Set the **Push Interface** to **Cell**

   All push data will be sent using the cellular modem.
3. Go to the **Settings › Cellular** screen. Under the **Cell Configuration** section, select the **Cell module** from the drop-down list.
   - **For the United States (contiguous)**—For Verizon LTE/CATM modems, select **SXI-LTE-001** or **SXI-CATM1VZW-001** and set the **APN** to **vzwinternet**.
   - **For North America**—For ATT LTE/CATM modems, select **SXI-CATM1ATT-001** and set the **APN** to **iot0119.com.attz**. Requires a SIM module to be purchased from a wireless carrier based on the IMEI number of the cellular modem. The wireless carrier will provide the APN parameters. Not all parameters may be required.
   - **For regions outside of North America**—Select **SXI-CATM1WW-001** and set the **APN** to **m2m.tele2.com** when using the SIM card provided with the kit from Banner Engineering. When using a local roaming SIM, please use the APN as suggested by your cellular connectivity (SIM) provider.
4. To send data to the webserver, complete the parameters on the **Settings › Cloud Services** screen. Set the **Cloud push interval** and the **Web Server** settings. (For more information, refer to the DXM Configuration Software Instruction Manual (p/n 201127).

© Banner Engineering Corp. All rights reserved.
www.bannerengineering.com

*The **Settings › Cloud Services** screen*



IMPORTANT: Banner Engineering offers several prepackaged solutions that report to the Banner Cloud Data Services web-based software platform via cellular connectivity. Many of these solutions execute the data push using a ScriptBasic file instead of the XML configuration file. If you are using a Banner prepackaged solution (ex. SOLUTIONSKIT9-VIBE), then you do not need to set the **Cloud Push Interval** on the **Settings › Cloud Services** screen. You still need to set the **Push Interface** to **Cell** and select the appropriate **Cell Module** and **APN**.

When the DXM1200 is configured to use the cellular modem, the information on the cellular modem is found on the LCD menu under **System Info › Cell**. The menu does not display values until a transaction with the wireless cell tower is complete.

*The **Settings › Cellular** screen*

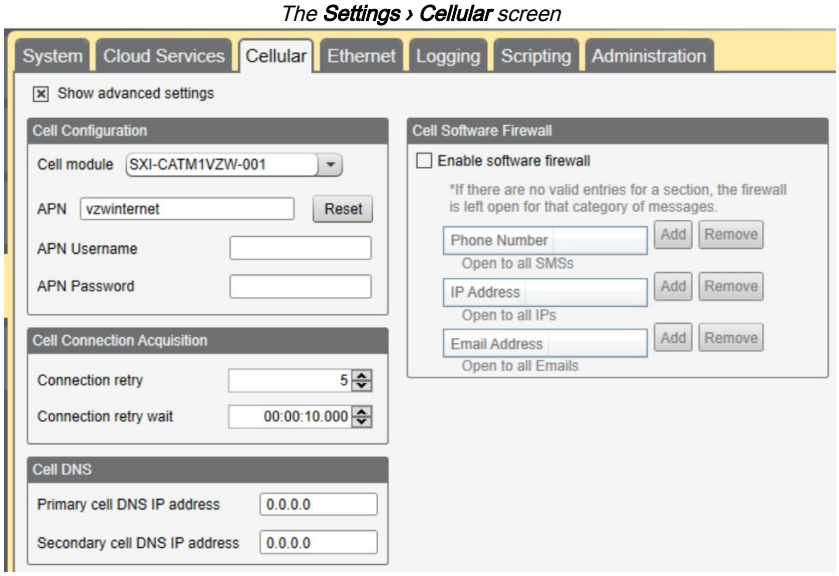

If there are no webserver parameters defined, the user must force a push to retrieve the data from the cellular network. On the LCD menu, select **Push › Trigger Data Push**.

Obtaining LTE service outside of the Banner Cellular Data Plans—Customers have the option of securing a data plan for the Verizon network themselves without using the Banner cellular data portal (celldata.bannercds.com). Suitable plans would include those available from Verizon directly or from a Mobile Virtual Network Operator (MVNO) licensed to resell Verizon network data plans. (The **SXI-LTE-001** or **SXI-CATM1VZW-001** will not function on AT&T, T-Mobile, or Sprint networks.) When purchasing a data plan, it is important to refer to the modem by its official Verizon network name (for example, SENSX002) and give the IMEI number (found on the cellular modem) to the plan provider. To use the SIM card that comes with the cellular modem kit, give the SIM card number to the provider. The required SIM card form factor is 3FF - Micro.

© Banner Engineering Corp. All rights reserved.
www.bannerengineering.com

Chapter Contents

Registers 46
Push 47
ISM Radio 47
System Config 48
System Info 49
Display Lock 50
DXM1200-Bx Modbus Registers for the LCD (Modbus ID 201) 50

Chapter 6 LCD and Menu System

The LCD has four user-defined LED indicators, four control buttons, and an LCD. The four buttons control the menu system on the LCD menu.

The top-level menu always displays the time in a 24-hour format.

- The up and down arrows scroll through display items.
- The **ENTER** button selects the highlighted items on the display.
- The **BACK** button returns to a previous menu option.

The left display column shows an arrow at the beginning of the line if the menu has submenus. The right column shows a vertical line with an arrow at the bottom if the user can scroll down to see more menu items.

The DXM can be configured to require a passcode be entered before the LCD and Menu system will operate. The passcode configuration is defined in the DXM Configuration Software.

Top-level menu

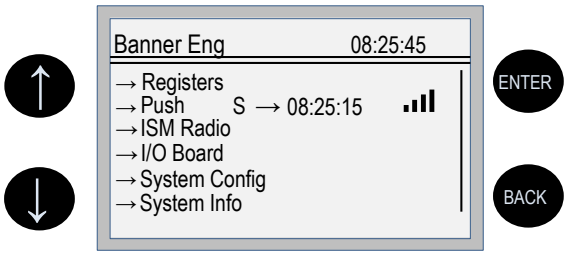

Registers

The **Registers** submenu displays the processor's local registers that can be configured using the DXM Configuration Software.

Registers menu

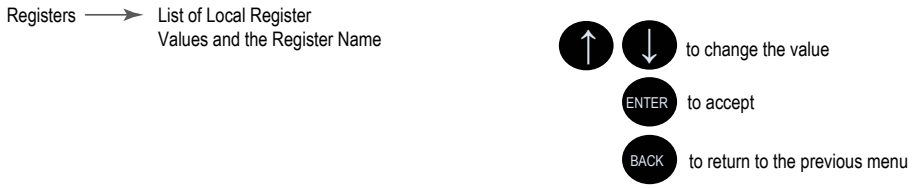

To configure these local registers, launch the DXM Configuration Software. Go to **Local Registers** and expand the view for a local register by clicking on the down arrow next to the register number. In the LCD Permissions field, select None, Read, Write, or Read/Write.

Read allows the register to be displayed and Write or Read/Write allows the register value to be changed using the LCD. The Units and Scaling parameters are optional and affect the LCD.

© Banner Engineering Corp. All rights reserved.
www.bannerengineering.com

Push

The **Push** menu displays information about the last data sent to the Webserver.

Push menu

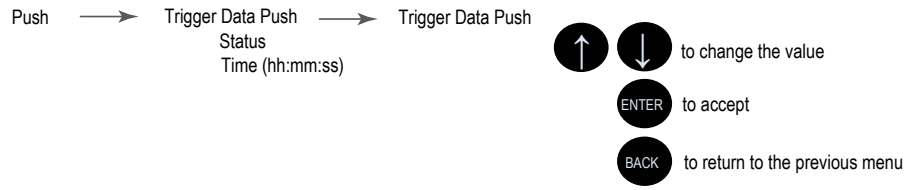

The user can force an immediate push to the webserver using Trigger Push. If a current push is in process it may take several minutes to complete over cellular.

- The **Trigger Push** submenu forces an immediate push to the web server.
- The status and time fields indicate the success or failure of the last attempted push and the time of the last attempted push.

ISM Radio

The **ISM Radio** menu allows the user to view the Modbus ID of the internal ISM radio, enter binding mode, or run a site survey. This top-level **ISM Radio** menu is different from the **System Config › ISM Radio** submenu.

ISM Radio menu

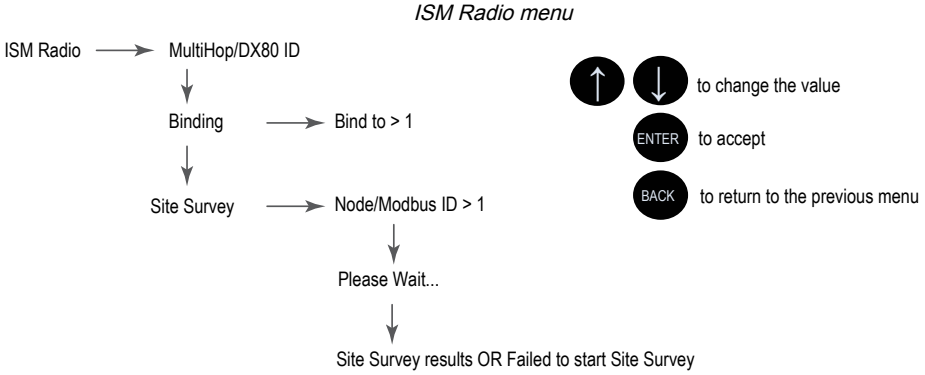

The first option under the **ISM Radio** menu only displays the type of radio in the DXM1200 (MultiHop or DX80 Star) and the Modbus ID of the radio. To change the ISM Radio Modbus ID refer to the **System** menu.

Select **Binding** to enter binding mode or select **Site Survey** to run a site survey.

Binding— All ISM radio devices must be bound to the internal Gateway/client device before the DXM1200 can access wireless devices. The first submenu under binding allows the user to set the wireless address of the device to bind with. This is required to bind with wireless devices that do not have rotary dials (for example M-GAGEs, ultrasonic sensors, and Q45 devices). See "Binding and Conducting a Site Survey with the ISM Radio" on page 19. For more information on binding a particular device, refer to the individual datasheet.

Site Survey—After creating a wireless network using the binding process, run a site survey on each device to see the link quality. See "Conduct a Site Survey from the DXM" on page 20.

© Banner Engineering Corp. All rights reserved.
www.bannerengineering.com

System Config

Use the **System Config** menu to set DXM1200 system parameters.

System Config menu

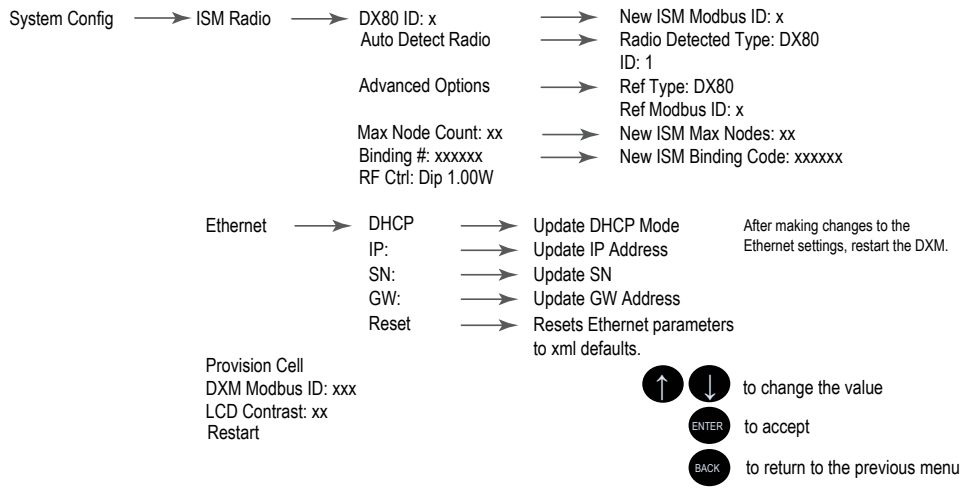

The **System Config** submenus are:

- ISM Radio
- Ethernet
- Provision Cell
- DXM Modbus ID
- LCD Contrast
- Restart

ISM Radio

DX80/MultiHop ID—The ISM radio is set at the factory to be Modbus device address 1 (Modbus ID 1). For some applications, you may need to change the Modbus ID. Adjust the Modbus device address using the LCD menu system. Any other method may cause issues with the DXM1200 not knowing which Modbus device address is assigned to the radio, which causes issues with running Binding or Site Survey from the LCD menu.

Set the radio Modbus ID to a valid number (1 through 247) that is not being used by the DXM system. Processor Local Registers allocate ID 199, the I/O board is set to ID 200, and the display board is set to ID 201. With a DX80 Gateway (star network), it's easy to choose a new ID. With a MultiHop network, remember that the client MultiHop radio allocates a range of Modbus IDs for wireless devices, typically 11 through 110.

When setting the new ISM Modbus ID, the system changes the Modbus ID on the internal radio and changes the reference to it on the DXM1200. The reference Modbus ID is what the DXM1200 uses to access the internal radio when running Binding or Site Survey.

Auto Detect Radio—If the internal Modbus ID of the radio was changed or the internal radio was changed, but not recorded, use Auto Detect Radio to determine the radio ID and radio type. The auto-detect routine broadcasts discovery messages and waits for a response. If other devices are connected to the external RS-485 ports, they may need to be disconnected for this process to work properly.

Advanced Options—The Advanced Options menu is typically not used unless the Modbus ID is changed without the DXM1200 being involved, such as when you write directly to the radio Modbus registers.

- **Reference Type** selects the radio type between DX80 star architecture radios and a MultiHop radio. The DXM1200 uses this reference to determine how to communicate to the internal radio. If set incorrectly, the DXM1200 may not be able to run Site Survey from the LCD menu. Unless you are changing or adding the internal radio device, there should no reason to change the radio type.
- **Reference Modbus ID** defines the Modbus ID the DXM1200 uses when communicating with the internal radio. If this is set incorrectly, the DXM1200 will not be able to run Binding or Site Survey through the LCD menu.

Max Node Count—Defines the maximum number of devices for the DX80 wireless network.

© Banner Engineering Corp. All rights reserved.
www.bannerengineering.com

Binding #—This parameter allows the user to define the Binding code within the ISM radio. Typically, you will not have to adjust this number unless you are replacing an existing Gateway or client radio.

RF Ctrl—Displays the status of the ISM radio DIP switch 1 (off or on). The menu doesn't allow the user to change the DIP switch setting through the display.

Ethernet

Use the **Ethernet** submenu to sets the IP Address, Gateway Address, and Subnet mask of the DXM1200's Ethernet interface. You may change these settings either from the LCD menu (**System Config › Ethernet**) or from the XML configuration file created by the DXM Configuration Software.

The network address settings from the LCD menu have the highest priority and override settings in the XML configuration file. To use the parameter settings from the XML configuration file or use DHCP, execute the **Reset** under **System Config › Ethernet** or use the LCD to set the IP Address, Gateway Address, and Subnet Mask to 255.255.255.255. Reboot the DXM1200 after changing the Ethernet parameters.

The Ethernet cable should be attached before powering up the DXM1200.

LCD Contrast

Use the **LCD Contrast** option to adjust the LCD contrast. Adjust the starting number lower to decrease the display contrast. The factory default is 28. Do not set a number less than 15 or the display may not be bright enough to see to change back.

Reset

Use the **Restart** menu to force the main processor to restart. This does not affect the other boards in the system.

System Info

Various DXM system settings are shown in this menu. The Push, Ethernet, and Cell parameters are helpful for debugging network connections. This is a read-only menu.

System Info menu

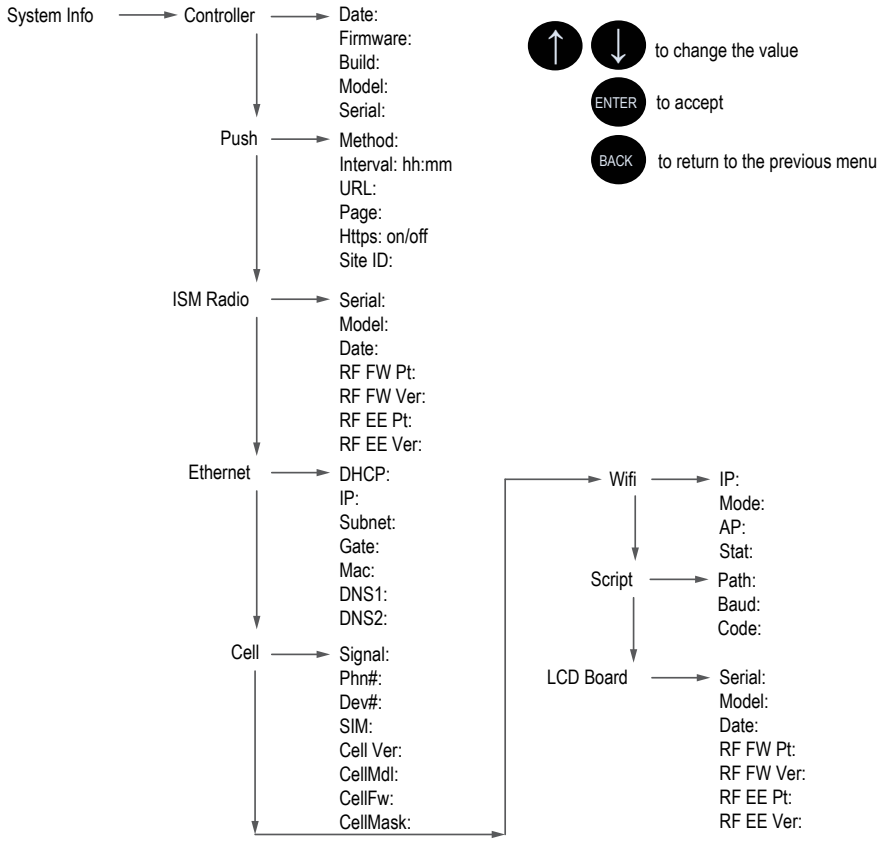

Cell Shows the cellular MEID number (Mobil Equipment Identifier),

© Banner Engineering Corp. All rights reserved.
www.bannerengineering.com

MDN (Mobil Device Number), version, signal, firewall setting, and firewall mask. Some of these parameters are not visible until the cellular network is accessed.

Controller
Displays the date, build, model, and serial number.

Ethernet
Displays the IP address, MAC address, DHCP, Gateway address, and DNS settings.

ISM Radio
Displays the serial number, model, date, firmware part numbers, and version numbers.

LCD Board
Displays the serial number, model, date, firmware part numbers, and version numbers.

Push
Shows the current parameters loaded from the XML configuration that applies to pushing data to a webserver, including method (Ethernet or cellular), interval, URL, page, HTTPS, and site ID.

Script
Displays the name of the ScriptBasic file running.

Wi-Fi
Displays the Wi-Fi IP address and other settings.

Display Lock

Display Lock protects the DXM LCD menu system from being used until the proper passcode is entered.

Display Lock menu



The display lock feature uses the configuration software to set a passcode within the DXM. A valid passcode is 1 to 9 digits long and uses numbers 0 through 9. For example, `1234` or `209384754`.

DXM1200-Bx Modbus Registers for the LCD (Modbus ID 201)

Control the four bi-color LEDs using the display's Modbus registers. Using write maps or ScriptBasic, write the Modbus registers shown below with 0 (off) or 1 (on).

Modbus registers for the LCD board (Modbus ID 201)

Modbus Register	LED	Color	State
1102 : bit 0	LED 1	Red	1 = On 0 = Off
1103 : bit 0	LED 2	Green	
1104 : bit 0	LED 3	Blue	
1105: bit 0	LED 4	Amber	
1106: bit 0	Backlight		

© Banner Engineering Corp. All rights reserved.
www.bannerengineering.com

Chapter Contents

Assigning Modbus IDs 51
Modbus Operation 52
Wireless and Wired Devices 52
Modbus Communication Timeouts 52
Modbus TCP Client 54

Chapter 7 Working with Modbus Devices

The DXM1200 has two physical RS-485 connections using Modbus RTU protocol.

The client Modbus RS-485 port is for the DXM1200 to act as a Modbus client device to control internal and external Modbus server devices. The Modbus client RS-485 port uses the white (+) and black (-) wires on the M12 quick disconnect connector.

DXM1200 system overview

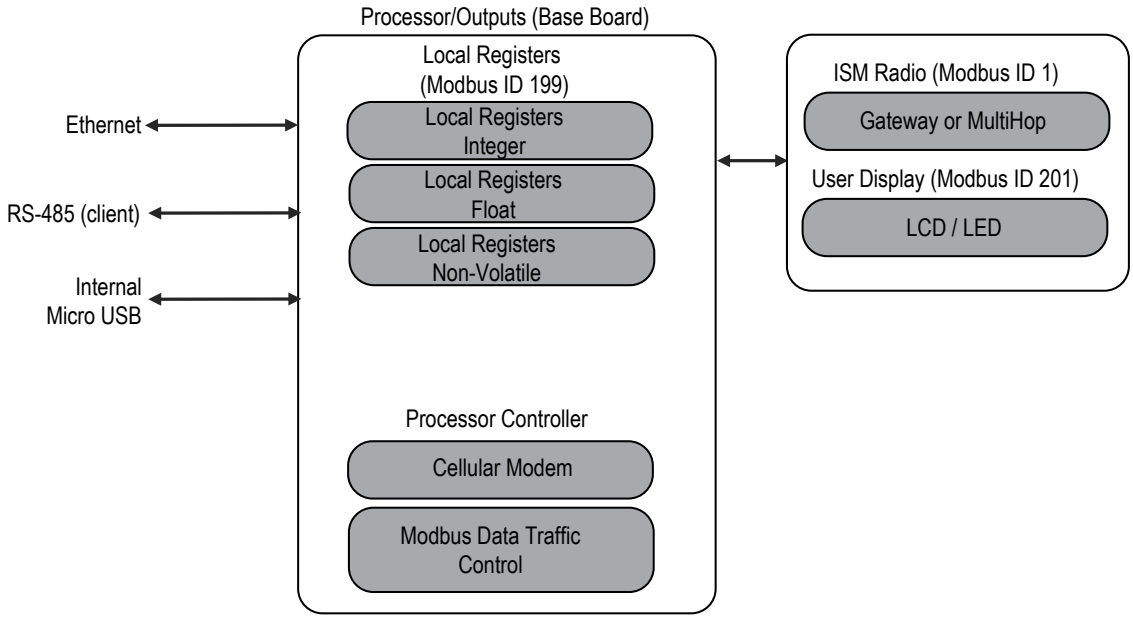

The DXM1200 operates the Modbus client port. Each device on the client port must be assigned a unique server ID. There are server IDs that are reserved for internal devices in the DXM1200.

DXM internal Modbus IDs (factory default)

Modbus ID	Device
1	DX80 Performance Gateway or MultiHop ISM Radio—MultiHop wireless devices connected to the internal MultiHop radio should be assigned Modbus IDs starting at 11.
199	Local Registers—Internal storage registers of the DXM1200
201	LCD—The user has access to the LED indicators on the DXM1200.

Assigning Modbus IDs

Set the DXM ID from the LCD menu under **System › DXM Server ID**. The DXM1200 can have any unique ID.

DXM Client Configuration—When the DXM1200 operates as a Modbus client device, use the DXM Configuration Software to configure read or write operations of the DXM Modbus network. The DXM1200 communicates with all internal and external peripheral devices using the external Modbus bus RS-485.

© Banner Engineering Corp. All rights reserved.
www.bannerengineering.com

There are four internal Modbus server devices that are configured from the factory with Modbus IDs. Assign IDs of 2 through 10 to Modbus server devices that are physically wired to the DXM1200. Assign IDs or 11 through 60 to wireless servers within the MultiHop network.

Do not assign an ID of greater than 10 to Modbus server devices that are physically wired using the RS-485 port if there is an internal MultiHop ISM radio in the DXM1200. The MultiHop ISM radio attempts to send any Modbus data intended for IDs 11–60 across the radio network, which conflicts with wired server devices if the IDs overlap. The MultiHop client radio can be changed from the factory default of 11–60 Modbus IDs if more hardwired servers are required.

Modbus Operation

All Modbus transactions are managed by a central Modbus engine. If there are Modbus messages intended for a Modbus server that doesn't exist, the Modbus engine waits for a response until the timeout period is expired. This slows down the Modbus polling loop for read and write operations.

For this reason, verify all Modbus read and write operations are intended for Modbus server devices that are in the network. If a Modbus server is not in the network, either a wired or wireless device, the operation of the LCD menu system can be compromised. Operations like Binding, Site Survey, or accessing the ISM menu may be slower. This is because all internal devices (such as the ISM radio, LCD, etc) of the DXM1200 are also Modbus servers.

Wireless and Wired Devices

Wireless DX80 Performance Gateway—The DX80 Performance Gateway architecture is a star architecture in which all Nodes in the system send their data back to the Gateway. The host can access the entire network data from the Gateway, which is Modbus ID 1. Because the DXM1200 will not be sending any Modbus messages across the wireless link, the timeout parameter can be set low (less than 1 second) and the device is treated like a directly connected device.

MultiHop Client—The MultiHop client radio forms a wireless tree network using repeaters and server devices. Each device in a MultiHop network must be assigned a unique Modbus ID and is accessed as a separate device.

For the DXM1200 to talk with a MultiHop device in the wireless network, the client MultiHop device interrogates every message on the RS-485 bus. If they are within the wireless device range (IDs 11 though 60), the message is sent across the wireless network. To change this range, the user must adjust the offset and range setting in the MultiHop client radio (Modbus ID 1). Modbus register 6502 holds the Modbus offset, default 11. Modbus register 6503 holds the number of Modbus servers allowed (maximum of 100).

Modbus IDs for wireless and wired devices

Modbus ID	Description
1	Allocated for the internal ISM radio device, either a DX80 Performance Gateway or MultiHop Client
2–10	IDs available for direct-connected Modbus server devices to the client RS485 port (M+ , M-)
11–60	Allocated for wireless MultiHop radio network devices. If there is not an internal MultiHop in the DXM1200, these server addresses are available to use for directly connected devices.
61–198	Available to users for direct-connected Modbus server devices or the expansion of the wireless network server IDs to go past 50 wireless devices.
199	Allocated for internal Local Register
201	Allocated for the LCD display board, the user can read/write LEDs.

Modbus Communication Timeouts

A Modbus timeout is the amount of time a Modbus server is given to return an acknowledgment of a message sent by the Modbus client. If the Modbus client waits for the timeout period and no response is seen, the Modbus client considers it a lost message and continues on to the next operation.

The timeout parameter is simple to set for Modbus devices directly connected to the DXM1200, if there are no MultiHop wireless devices. Special considerations need to be made to set the timeout parameter when a MultiHop network uses the DXM1200 as the client radio.

Configure controllers operating wireless networks to allow for enough time for hardware transmission retries. Set the **Communications Timeout** parameter to cover the expected time for messages to be sent throughout the wireless network. For the DXM1200, the **Communications Timeout** parameter is the maximum amount of time the DXM1200 should wait after a

© Banner Engineering Corp. All rights reserved.

request is sent until the response message is received from the Modbus server device. Use the DXM Configuration Software to set the timeout parameter on the **Settings › System** screen (select **Show advanced settings**).

The default setting for the timeout parameter is 5 seconds.

MultiHop Networks vs DX80 Star Networks

The DX80 star Gateway collects all the data from the Nodes, which allows the host system to directly read the data from the Gateway without sending messages across the wireless network. This allows for DX80 Gateway to be treated like any other wired Modbus device.

In a MultiHop network, the data resides at each device, forcing the controller to send messages across the wireless network to access the data. For this reason, carefully consider the value of the wireless timeout parameter.

Calculating the Communications Timeout for Battery-Powered MultiHop Radios

Battery-powered MultiHop radios are configured to run efficiently to maximize battery life. By optimizing battery life, the allowed communications window to receive messages is slow (once per 1.3 seconds) and sending message rates are standard (once per 0.04 seconds).

A MultiHop device is set from the factory with the retry parameter of 8. This means that under worst-case conditions, a message is sent from the DXM1200 to an end device a total of nine times (one initial message and eight retry messages). The end device sends the acknowledgment message back to the DXM1200 a maximum of nine times (one initial message and eight retries). A single Modbus transaction may send up to two messages + 16 retry messages before the transaction is complete. In addition, the radios randomly wait up to one time period before retransmitting a retry message. So to allow for the random wait time, add one extra time period for each in-between time of retries.

To calculate the communication timeout parameter for a client to a server radio (no repeaters):

Client to Server Send time = (9 × 1.3 sec) + (8 retry wait × 1.3 sec) = 22 seconds
Server to Client Send time = (9 × 0.04 sec) + (8 retry wait × 0.04 sec) = 1 second
Total Send/Receive time = 23 seconds
Minimum Timeout period = 23 seconds

If the link quality of the network is poor, the maximum transfer times may happen. Set the timeout parameter to accommodate the maximum number of retries that may happen in your application.

When MultiHop repeaters are added to the wireless network, each additional level of hierarchical network increases the required timeout period. Since MultiHop repeaters are running at the highest communications rate, the overall effect is not as great.

Client to Repeater Send time = (9 × 0.04 sec) + (8 retry wait × 0.04 sec) = 1 second
Repeater to Client Send time = (9 × 0.04 sec) + (8 retry wait × 0.04 sec) = 1 second
Additional Timeout period for a repeater = 2 seconds

Using the timeout calculation above of 23 seconds, if a repeater is added to the network the timeout should be set to 25 seconds. For each additional MultiHop repeater device creating another level of network hierarchy, add an additional two seconds to the timeout period.

Calculating the Communication Timeout for 10–30 VDC MultiHop Radios

Line-powered (10–30 V DC) MultiHop devices operate at the maximum communication rate, resulting in a much lower timeout parameter setting. For each repeater added to the network, increase the timeout parameter 2 seconds.

For a client radio to a 10–30 V DC powered server radio (no repeaters):

Client to Server Send time = (9 × 0.04 sec) + (8 retry wait × 0.04 sec) = 1 second
Server to Client Send time = (9 ×* 0.04 sec) + (8 retry wait × 0.04 sec) = 1 second
Total send/receive time = 2 seconds
Minimum timeout period = 2 seconds

Adjusting the Receive Slots and Retry Count Parameters

The number of receive slots governs how often a MultiHop device can communicate on the wireless network.

Battery-powered devices typically have DIP switches that allow the user to set the number of receive slots, which directly affects the battery life of the radio. Adjusting the receive slots changes how often a message can be received. By default, the receive slots are set to 4 (every 1.3 seconds). When the receive slots are set to 32, the radio listens for an incoming message every 0.16 seconds.

© Banner Engineering Corp. All rights reserved.

Users may also leave the retry mechanism to the application that is accessing the wireless network, in this case the DXM1200. Adjust the number of retries in the MultiHop devices by writing the number of retries desired to Modbus register 6012. The factory default setting is 8.

Calculating the Communication Timeout for a DX80 Star Network

In the DX80 network, all Node data is automatically collected at the Gateway to be read. The DXM1200 does not use the wireless network to access the data, which allows for much faster messaging and much lower timeout values.

For a DXM1200 with an internal DX80 Gateway, set the timeout value 0.5 seconds. If other Modbus devices are connected to the RS-485 lines, the timeout parameter governs all communication transactions and must be set to accommodate all devices on the bus.

Modbus TCP Client

The DXM1200 can operate as a Modbus TCP client on Ethernet. Users may define up to five socket connections for Modbus TCP server devices to read Modbus register data over Ethernet. Use the DXM Configuration Software to define and configure Modbus TCP client communications with other Modbus TCP servers.

© Banner Engineering Corp. All rights reserved.

Chapter Contents

Scheduler 55
Authentication Setup 56
Register Flow and Configuration 58
EtherNetIP Configuration 58
Define the Network Interface Settings 60
Ethernet and Cellular Push Retries 61

Chapter 8 Configuration Instructions

Scheduler

Use the **Scheduler** screens to create a calendar schedule for local register changes, including defining the days of the week, start time, stop time, and register values.

Schedules are stored in the XML configuration file, which is loaded to the DXM1200. Reboot the DXM1200 to activate a new schedule.

If power is cycled to the DXM1200 in the middle of a schedule, the DXM1200 looks at all events scheduled that day and processes the last event before the current time.

For screens that contain tables with rows, click on any row to select it. Then click **Clone** or **Delete** to copy/paste or remove that row.

Create a Weekly Event

Use the **Tools › Scheduler › Weekly Events** screen to define weekly events.

Scheduler > Weekly Events screen

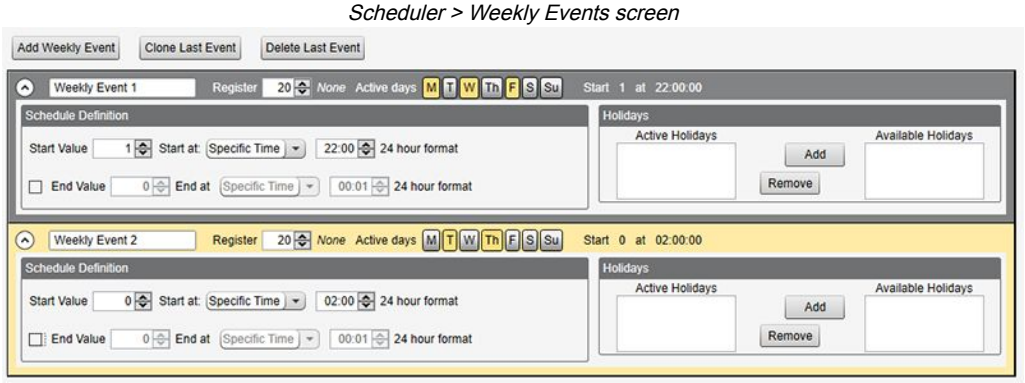

1. Click **Add Weekly Event**.
   A new schedule rule is created.
2. Click on the arrow to the left of the new rule to expand the parameters into view.
   The user-defined parameters are displayed.
3. Name your new rule.
4. Enter the local register.
5. Select the days of the week this rule applies to.
6. Enter the starting value for the local register.
7. Use the drop-down list to select the type of Start at time: a specific time or a relative time.
8. Enter the starting time.
9. Enter the end time and end value for the local register.

Register updates can be changed up to two times per day for each rule. Each rule can be set for any number of days in the week by clicking the buttons M, T, W, Th, F, S, or Su.

© Banner Engineering Corp. All rights reserved.
www.bannerengineering.com

If two register changes are defined for a day, define the start time to be before the end time. Select **End Value** to enable the second event in a 24-hour period. To span across two days (crossing the midnight boundary), set the start value in the first day, without selecting **End Value**. Use the next day to create the final register state.

Start and end times can be specified relative to sunrise and sunset, or set to a specific time within a 24-hour period. When using sunrise or sunset times, set the GPS coordinates on the device so it can calculate sunrise and sunset.

Create a One-Time Event

Define one-time events to update registers at any time within a calendar year.

Similar to Weekly events, the times can be specific or relative to sunrise or sunset. Define one-time events using the **Tools › Scheduler › One Time Events** screen.

Scheduler > One Time Events screen

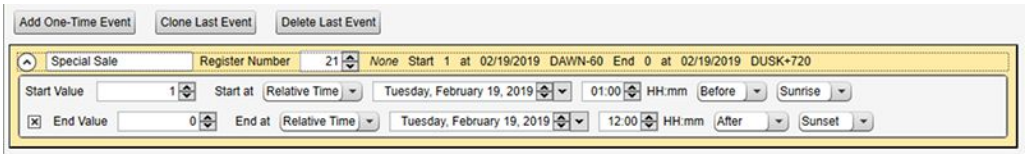

1. Click on **Add One Time Event**.
   A new one-time event is created.
2. Click on the arrow to expand the parameters into view.
   The user-defined parameters are displayed.
3. Name your one-time event by clicking on the name link and entering a name.
4. Enter the local register.
5. Enter the starting time, date, and starting value for the local register.
6. Enter the ending time, date, and ending value for the local register.

Create a Holiday Event

Use the **Tools › Scheduler › Holidays** screen to create date and/or time ranges that interrupt weekly events.

Scheduler > Holidays screen

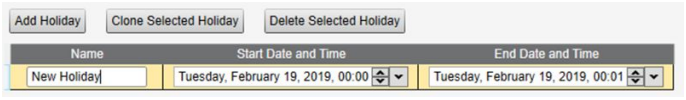

1. Click on **Add Holiday**.
   A new rule is created.
2. Enter a name your new holiday rule.
3. Select the start date and time for the new holiday.
4. Select the stop date and time for the new holiday.

Authentication Setup

The DXM1200 has three areas that can be configured to require login and password authentication.

- Webserver/ Cloud Services Authentication
- Mail Server Authentication
- DXM Configuration Authentication

The webserver and mail server authentication depends upon the service provider.

© Banner Engineering Corp. All rights reserved.
www.bannerengineering.com

Set the Controller to use Authentication

The DXM1200 can be configured to send login and password credentials for every HTTP packet sent to the webserver. This provides another layer of security for the webserver data.

Configuration requires both the webserver and the DXM1200 to be given the same credentials for the login and password. The webserver authentication username and password are not stored in the XML configuration file and must be stored in the DXM1200.

1. From within the DXM Configuration Software, go to the **Settings › Cloud Services** screen.
2. In the upper right, select **Show advanced settings**.
3. Define the username and password in the **Web Server Authentication** section of the screen.

   The first time you select **Require Authentication**, a pop-up box appears with additional instructions. Since the data is not stored in the XML configuration file, it is hidden from view of the DXM Configuration Software.
4. Click on **Send Authentication**.

   The controller must be connected to the PC for this operation to succeed.

   The data transmits directly to the DXM1200's non-volatile memory. If successful, a pop-up window appears, asking to reboot the device.
5. Select **Yes** to reboot the device.

Web Server Authentication screen

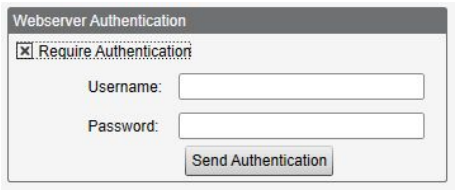

Controller Configuration Authentication

The DXM1200 can be programmed to allow changes to the configuration files only with proper authentication by setting up a password on the **Settings › Administration** screen in the DXM Configuration Software.

With the DXM1200 connected to the PC, click **Get Device Status**. The DXM1200 status displays next to the button.

Use the DXM Configuration Software to:

- Set the Admin Password
- Change the Admin Password
- Remove the Admin Password

To change or remove an admin password, you are required to enter the current password and the DXM1200 must be connected to the PC.

Settings > Administration screen

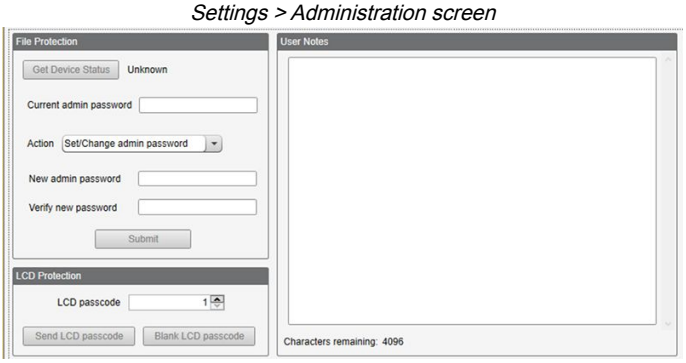

© Banner Engineering Corp. All rights reserved.
www.bannerengineering.com

Register Flow and Configuration

The DXM1200 register data flow goes through the Local Registers, which are data storage elements that reside within the processor.

Using the DXM Configuration Software, the controller can be programmed to move register data from the Local Register pool to remote devices, the internal radio, the I/O base (if applicable), or the display.

Register flow

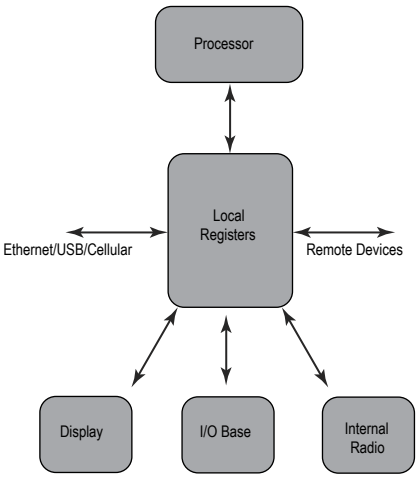

Basic Approach to Configuration

When programming an application in the DXM1200, first plan the overall data structure of the Local Registers. The Local Registers are the main storage elements in the DXM1200. Everything goes into or out of the Local Registers.

1. In the DXM Configuration Software, name the Local Registers to provide the beginning structure of the application.
2. Configure the read/write rules to move the data. The Read/Write rules are simple rules that move data between devices (Nodes, Modbus servers, sensors, etc) and the Local Registers.
3. Most applications require the ability to manipulate the Local Register data, not just move data around. Use the **Action rules** to make decisions or transform the data after the data is in the Local Registers. Action rules can apply many different functions to the Local Register data, including conditional statements, math operations, copy operations, or trending.
4. To perform scheduled events in Local Registers, go to the **Scheduler** screen in the DXM Configuration Software. These rules provide the ability to create register events by day of the week. The scheduler can also create events based on sunrise or sunset.

Troubleshooting a Configuration

View Local Registers using the **Local Registers › Local Registers in Use** screen of the DXM Configuration Software.

When a configuration is running on the DXM1200, viewing the Local Registers can help you to understand the application's operation. This utility can also access data from remote devices.

To configure the Local Register data to display on the LCD menu, go to the **Local Registers** screen, set the **LCD permissions** to read or read/write.

Saving and Loading Configuration Files

The DXM Configuration Software saves its configuration information in an XML file. Use the **File** menu to Save or Load configuration files.

Save the configuration file before attempting to upload the configuration to the DXM1200. The DXM Configuration Software uploads the configuration file saved on the PC to the DXM1200; it will not send the configuration loaded in the tool.

Uploading or Downloading Configuration Files

The DXM1200 requires an XML configuration file to become operational. To upload or download configuration files, connect a computer to the DXM1200 using the USB port or Ethernet port. Then use the **Upload Configuration to Device** or **Download Configuration from Device** under the **Device** menu.

EtherNetIP Configuration

The DXM1200 is defined from the factory to send/receive register data from the Gateway and the first 16 Nodes with an EtherNet/IP™[(2)] host.

To expand the number of devices going to Ethernet/IP, change the **Devices in system** parameter in the DX80 Gateway (default setting is 8) to 32. To change this value:

1. Launch the the DX80 Configuration Software.

[(2)] EttherNet/IP is a trademark of Rockwell Automation.

© Banner Engineering Corp. All rights reserved.

2. In the menu bar, go to **Device › Connection Settings** and select **Serial** or **Ethernet DXM**.
3. In the **Configuration › Device Configuration** screen, click on the arrow next to the Gateway to expand and display the Gateway's parameters.
4. In the **System** section, use the **Devices in system** drop-down list to make your selection.

This allows the user to maximize the use of the EtherNet/IP buffer to 28 devices.

EDS (Electronic Data Sheet) files allow users of the EtherNet/IP protocol to easily add a Banner DXM device to the PLC. Download the EDS files from the Banner website.

- DXM EDS Configuration File (for PLCs) (p/n b_4205242)
- DXM EIP Config File for DXM Controller with Internal Gateway (Models: DXM1xx-BxR1, DXM1xx-BxR3, and DXM1xx-BxCxR1) (p/n 194730)

Configuring the Host PLC

On the host PLC, install the DXM1200 using an EDS file or by using the following parameters:

- Assembly1: Originator to DXM = Instance 112, 456 bytes (228 words)
- Assembly2: DXM to Originator = Instance 100, 456 bytes (228 words)

The Originator is the host PLC system, and the DXM is the DXM1200. The host system sees the DXM1200 as a generic device with the product name of Banner DXM (ProdType: 43 - Generic Device, ProdName: Banner DXM, Integer Type - INT).

IMPORTANT: Do not set the Requested Packet Interval (RPI) any faster than 150 ms.

Configuring the Controller

Use the configuration software to define the **Protocol conversion** for each local register to be **EIP Originator › DXM** or **EIP DXM › Originator** from the **Edit Register** or **Modify Multiple Register** screens.

Define a DXM local register as **EIP Originator › DXM** when the host PLC (Originator) will send data to the DXM1200 local register (DXM).

Define a DXM local register as **EIP DXM › Originator** when that register data will be sent from the DXM1200 (DXM) to the host PLC (Originator).

Data from an EIP controller in assembly instance 112 is data destined for the DXM1200 local registers. The PLC is normally configured for INT or UINT data transfer. This allows for a seamless transfer of data.

EIP Assembly Instance 112 (16-bit)			DXM Local Registers	
Adrs	Data		Adrs	Data
0	1122		1	1122
1	3344		2	3344
2	5566		3	5566
3	7788		4	7788
4	9900		5	9900

Data from the DXM1200 local registers is sent to the EIP controller using assembly instance 100. Each local register in the DXM1200 defined as **EIP DXM › Originator** is collected in numerical order and placed into the data buffer destined for assembly instance 100. DXM local registers are capable of 32-bits, but only the lower 2-bytes (16-bits) for each local register are transferred.

EIP Assembly Instance 100 (16-bit)			DXM Local Registers	
Adrs	Data		Adrs	Data
0	1122		11	1122
1	3344		12	3344
2	5566		13	5566
3	7788		14	7788

Continued on page 60

© Banner Engineering Corp. All rights reserved.
www.bannerengineering.com

Continued from page 59

EIP Assembly Instance 100 (16-bit)			DXM Local Registers	
4	9900		15	9900

Define the Network Interface Settings

On the **Cloud Services** screen (shown with **Show advanced settings** selected), define the network connection settings by selecting Ethernet or Cell from the **Network Interface** drop-down list. This determines how the DXM1200 sends data.

If you don't require pushing data to a web server, set the **Cloud Push** interval to zero.

Cloud Services screen

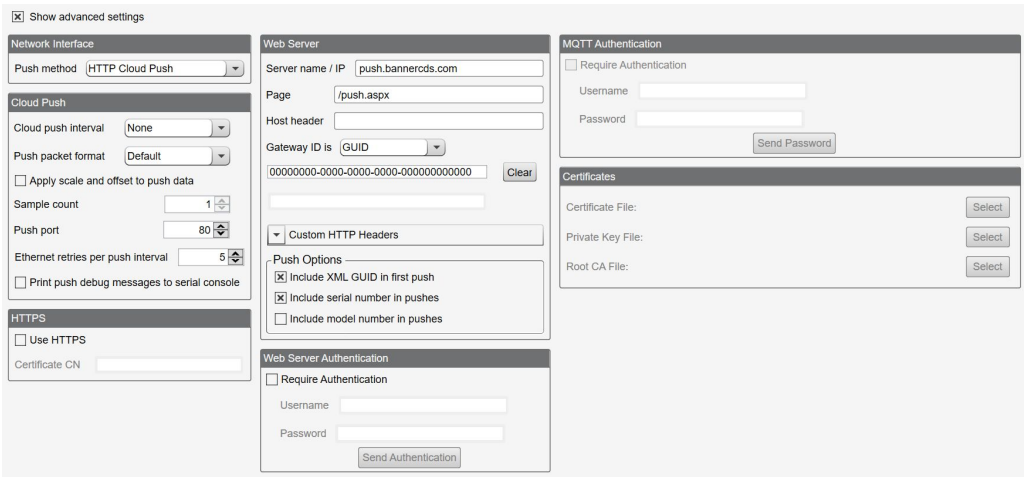

Configure your Ethernet Connection

When selecting Ethernet, go to the **Settings › Ethernet** screen.

1. To define the Ethernet IP address, give the DXM1200 a static IP address. In most cases, you may select the device to use DHCP and have the IP address automatically assigned.
2. DNS settings are not typically required. The DXM1200 uses a public service to resolve Domain names, but if the network connection does not have Internet access, the DNS settings may be required.

Settings > Ethernet screen

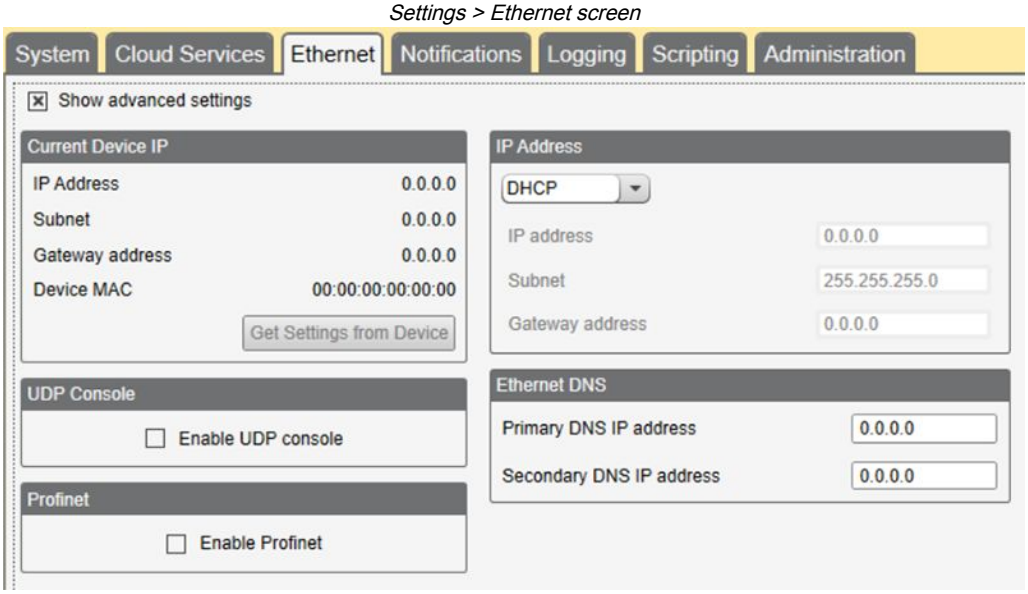

© Banner Engineering Corp. All rights reserved.
www.bannerengineering.com

Configure your Cellular Connection

To use a cellular connection, select Cell as the network connection on the **Settings › Cloud Services** screen (see "Configure the DXM Controller for a Cellular Modem" on page 44). The **Cellular** screen does not display unless the **Network interface** is set to Cell.

Using a 4G LTE cell module requires a cellular plan; follow the instructions on p/n 205026 to activate a cell modem.

1. On the **Settings › Cellular** screen, select your cellular modem from the drop-down list.
2. Set the APN.
    - If you are using a Banner 4G LTE-M Verizon Module (ME910C1), set the **APN** to `vzwinternet`.
    - If you are using a Banner 4G LTE AT&T Module (ME910C1), set the **APN** to `iot0119.com.attz`.
    - If you are using a Banner 4G LTE-M/NB-IoT Worldwide Module (ME910G1), set the **APN** to `m2m.tele2.com`.
    - If you are using a third-party SIM card, the APN, APN Username, and Password must be provided by the cellular service provider.

Ethernet and Cellular Push Retries

The DXM1200 can be configured to send register data packets to a webserver. When the Ethernet or cell communications path is not operating, the DXM1200 retries the send procedure. The communications retry process is outlined below for each configuration.

Regardless of the communications type (Ethernet or cellular), a failed attempt results in the register data packet being saved on the local storage device[(3)]. The number of retries will depend upon the network connection type.

When there is bad cellular signal strength or there is no Ethernet connection, the transmission attempts are not counted as failed attempts to send data. Only when there is a good network connection and there are 10 failed attempts will the controller archive the data on the local storage device. Data archived on the local storage device must be manually retrieved.

Ethernet Push Retries

With an Ethernet-based network connection, the DXM1200 retries a message five times. The five retry attempts immediately follow each other. After all attempts are exhausted, the register data packet is saved on the local storage device.

At the next scheduled time, the DXM1200 attempts to send the saved packet as well as the newly created register data packet. If it cannot send the new register data packet, the new register data packet is appended to the saved file on the local storage device to be sent later. After 10 rounds of retries, the data set is archived on the local storage device under folder **_sxi**. No additional attempts to resend the data are made; the data file must be manually retrieved.

Using SSL on Ethernet will have no retries but will save each failed attempt to the local storage device until 10 failed rounds. At this time, the register data packet is archived.

Cellular Push Retries

In a cellular-connected system there are no retries. Failed transmissions are saved on the local storage device.

After 10 successive failed attempts, the data is archived in the **_sxi** folder.

Send attempts with a low signal quality are not counted against the 10-count limit. For example, if the cellular antenna is disconnected for period that the DXM controller would have sent 20 messages under normal circumstances, all 20 messages would be saved and will be retried when the antenna is reconnected.

If the signal quality was good, but the cellular network was not responding, the DXM1200 archives the register data packets after 10 failed attempts.

Event-Action Rule or Log File Push Retries

Event-based pushes caused by Action rules follow the same process when failures occur, based on the network connection. The failed Event-based messages are resent with the next cyclical schedule or the next event message that triggers a push message.

---

(3) Enable HTTP logging to save data on the local storage device; this is the factory default. See **Settings › Logging** in the DXM Configuration Software.

© Banner Engineering Corp. All rights reserved.
www.bannerengineering.com

Chapter Contents

General Station Description Markup Language File 62
DXM PROFINET IO Data Model 62
Configure the DXM Controller for a PROFINET IO Connection 62
Slots and Modules for the DXMR90-X1, DXM700, DXM1000, and DXM1200 PROFINET 63
Configuration Instructions 22

Chapter 9 PROFINET®

PROFINET is a data communications protocol for industrial automation and processes. PROFINET IO defines how controllers (IO controllers) and peripheral devices (IO devices) exchange data in real-time. PROFINET® is a registered trademark of PROFIBUS Nutzerorganisation e.V. and the standard is maintained by PROFIBUS & PROFINET International (PI), an organization headquartered in Karlsruhe, Germany.

Only the DXMR90-4K, DXMR90-X1, DXMR110-8K, DXM700, DXM1000, and DXM1200 Controller models support PROFINET IO.

General Station Description Markup Language File

A PROFINET General Station Description (GSD) file is a description of an IO device provided by the device manufacturer in an XML format (GSDML.xml).

The GSD file is a standardized way of describing the device information to engineering tools and the IO controller and can work across a variety of tools as a standard set of device information.

DXM PROFINET IO Data Model

The PROFINET IO data model is based on the typical, expandable field device that has a backplane with slots. Modules have different functionalities.

Modules are plugged into slots. In the PROFINET IO data model, Slot 0, Subslot 1 is reserved for the Device Access Point (DAP) or network interface.

Configure the DXM Controller for a PROFINET IO Connection

To use PROFINET, follow these instructions.

1. Using the DXM Configuration Software, go to the **Settings › Ethernet** screen.
2. Select **Enable PROFINET**.
3. Save the configuration file and upload it to the DXM Controller (see "Save and Upload the Configuration File" on page 25).

   After PROFINET is enabled, the IP address for the DXM Controller is controlled by the PROFINET host.

The PROFINET data type and data size to/from the DXM Controller is configurable. The PROFINET data is processed from the Local Register of the DXM Controller.

Configure the IO-Link ports in the XML according to the modules selected for each port.

Save and Upload the Configuration File

After making any changes to the configuration, you must save the configuration files to your computer, then upload it to the device.

Changes to the XML file are not automatically saved. Save your configuration file before exiting the software and before sending the XML file to the device to avoid losing data. If you select **DXM › Send XML Configuration to DXM** before saving the configuration file, the software will prompt you to choose between saving the file or continuing without saving the file.

1. Save the XML configuration file to your hard drive by going to the **File › Save As** menu.
2. Go to the **DXM › Send XML Configuration to DXM** menu.

© Banner Engineering Corp. All rights reserved.
www.bannerengineering.com

Status indicator bar

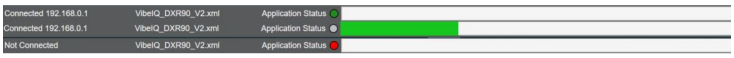

- If the Application Status indicator is red, close and restart the DXM Configuration Software, unplug and re-plug in the cable and reconnect the DXM to the software.
- If the Application Status indicator is green, the file upload is complete.
- If the Application Status indicator is gray and the green status bar is in motion, the file transfer is in progress.

After the file transfer is complete, the device reboots and begins running the new configuration.

Slots and Modules for the DXMR90-X1, DXM700, DXM1000, and DXM1200 PROFINET

There are nine slots to accommodate the DXM Controller data.

Slots for input and output values

Values	Slots	Maximum Data Size
Input values	1–6	1440 bytes
Output values	7–9	1440 bytes

Listing of slots for input and output values

Slot	PLC		DXM Local Register		Module Size
	Module Definition		Start	End	512
Slot 1	Inputs Integer	<-	1	256	
Slot 2	Inputs Integer	<-	257	512	
Slot 3	Inputs Integer	<-	513	768	
Slot 4	Inputs Float	<-	1001	1256	
Slot 5	Inputs Float	<-	1257	1512	
Slot 6	Inputs Float	<-	1513	1768	
Slot 7	Output Integer	->	5001	5256	
Slot 8	Output Integer	->	5257	5512	
Slot 9	Output Integer	->	5513	5768	

The DXM Local Register association shown uses a Module size of 512 bytes, which equals 256 Local Registers in the DXM. Module sizes supported are 64, 128, 256 and 512 bytes. Input Integers are data from the DXM to the PLC. Output integers are data from the PLC to the DXM.

Slots 1 through 3

Module	Notes
Input Integer 512	Allowed in slots 1-3, Module Identifier= 0x30
Input Integer 256	Allowed in slots 1-3, Module Identifier= 0x31
Input Integer 128	Allowed in slots 1-3, Module Identifier= 0x32
Input Integer 64	Allowed in slots 1-3, Module Identifier= 0x33

Slots 4 through 6

Module	Notes
Input Float 512	Allowed in slots 4-6, Module Identifier= 0x34

Continued on page 64

© Banner Engineering Corp. All rights reserved.
www.bannerengineering.com

Continued from page 63

Module	Notes
Input Float 256	Allowed in slots 4-6, Module Identifier= 0x35
Input Float 128	Allowed in slots 4-6, Module Identifier= 0x36
Input Float 64	Allowed in slots 4-6, Module Identifier= 0x37

Slots 7 through 9

Module	Notes
Output Integer 512	Allowed in slots 7-9, Module Identifier= 0x40
Output Integer 256	Allowed in slots 7-9, Module Identifier= 0x41
Output Integer 128	Allowed in slots 7-9, Module Identifier= 0x42
Output Integer 64	Allowed in slots 7-9, Module Identifier= 0x43

Example configuration for slots and modules

Slot	Module	Description
Slot 1	Input Integer 512	The two input integer modules have a total of 640 bytes (320 Modbus registers) The data will come from DXM Local Registers 1 through 320
Slot 2	Input Integer 128	
Slot 4	Input Float 128	The input Floating register module has a total of 128 byes (64 Modbus registers) Since it takes two Modbus registers to make a 32-bit floating value, there will be 32 floating point values coming from Local Registers 1001-1064
Slot 7	Output Integer 64	The output integer 64 module has a total of 64 bytes (32 Modbus registers). The data will come from the PLC and be put into DXM Local Registers 5001 through 5032

Configuration Instructions

Install the GSD File

Although these instructions are specific for the Siemens TIA Portal (v14) software, you may use these instructions as a basis for installing the GSD file into another controller.

1. Download the GSD file from www.bannerengineering.com.
2. Launch the Siemens TIA Portal (v14) software.
3. Click **Open existing project**.
4. Select a project and open it.
5. After the project is uploaded, click **Devices & networks**.

© Banner Engineering Corp. All rights reserved.
www.bannerengineering.com

Devices and networks screen

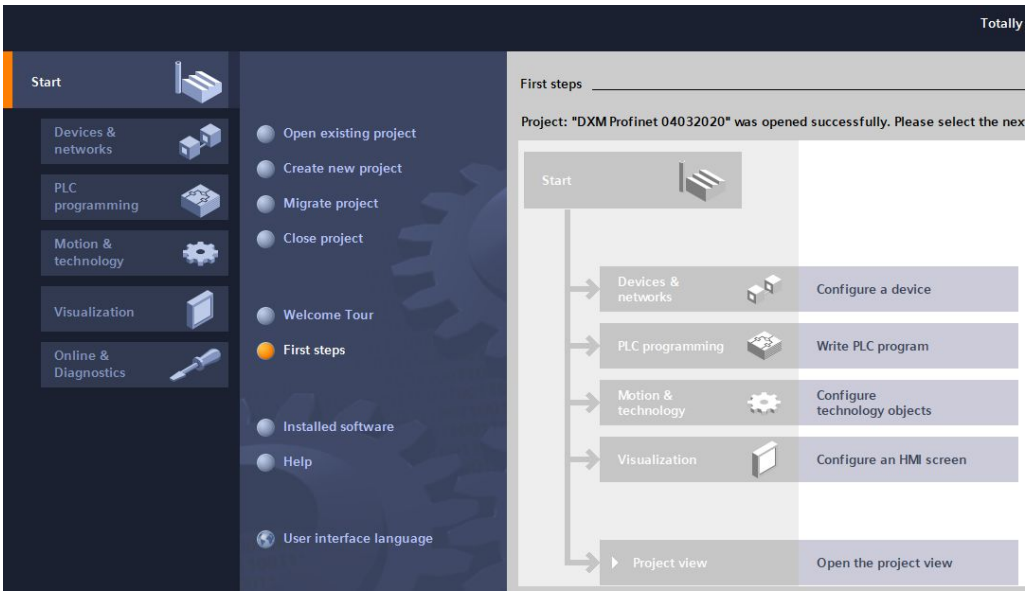

6. Click **Configure networks**.

Configure networks screen

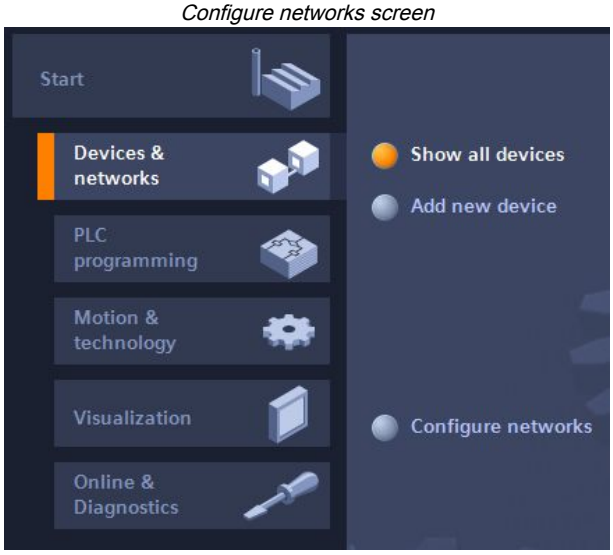

7. Click **Options** and select **Manage general station description file (GSD)**.
   The **Install general station decription file** window opens.
8. Click the **More options (...)** icon to the right of the **Source path** field and browse to the location the DXM GSD file was downloaded to.
9. Select the DXM GSD file.
10. Click **Install**.

© Banner Engineering Corp. All rights reserved.
www.bannerengineering.com

Hardware catalog

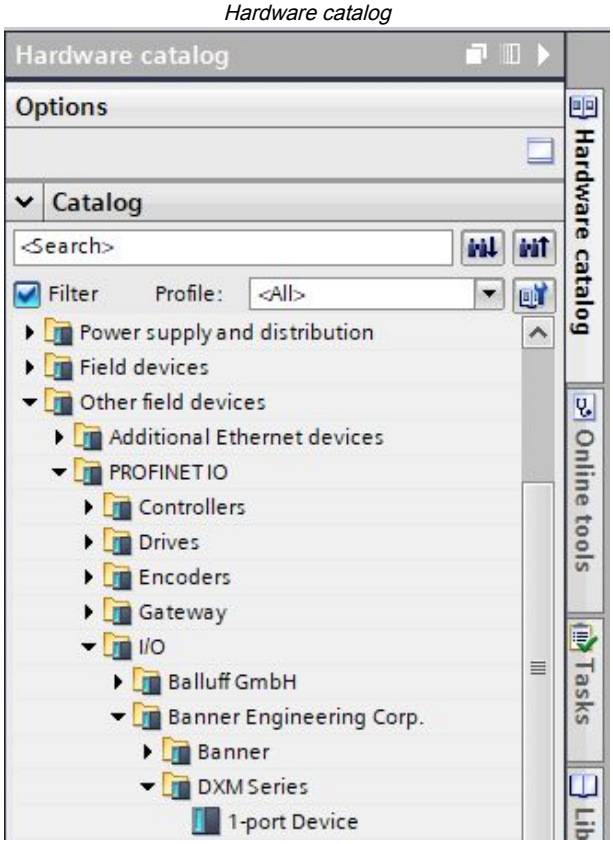

The system installs the DXM GSD file and places it in the **Hardware catalog**. In the example, the DXM GSD file is located under **Other field devices › PROFINET IO › Banner Engineering Corp. › Banner**.

If the DXM GSD file does not install properly, save the log and contact Banner Engineering Corp.

Change the Device IP Address

Follow these instructions to change the IP address of the DXM device using the Siemens TIA Portal (v14) software. Use these instructions as a basis if you are using another controller (PLC).

1. Launch the Siemens TIA Portal (v14) software.
2. Click **Open existing project**.
3. Select a project and open it.
4. Click **Devices & networks**.

Network view

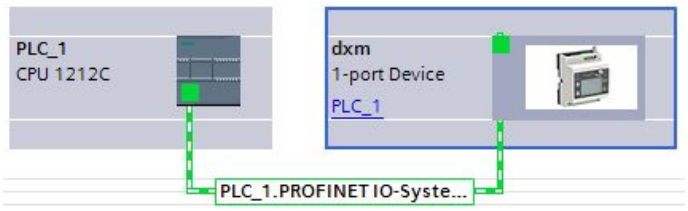

The **Network view** displays.

5. Double-click on the DXM icon to open the **Device view** screen.
6. Click on the DXM icon in the graphic area of the **Device view** screen.
   The **Module properties** window displays and the module can now be configured.
7. Click **Properties**.
8. Click **General**.
9. Select **PROFINET Interface › Ethernet addresses**.

© Banner Engineering Corp. All rights reserved.
www.bannerengineering.com

Ethernet addresses

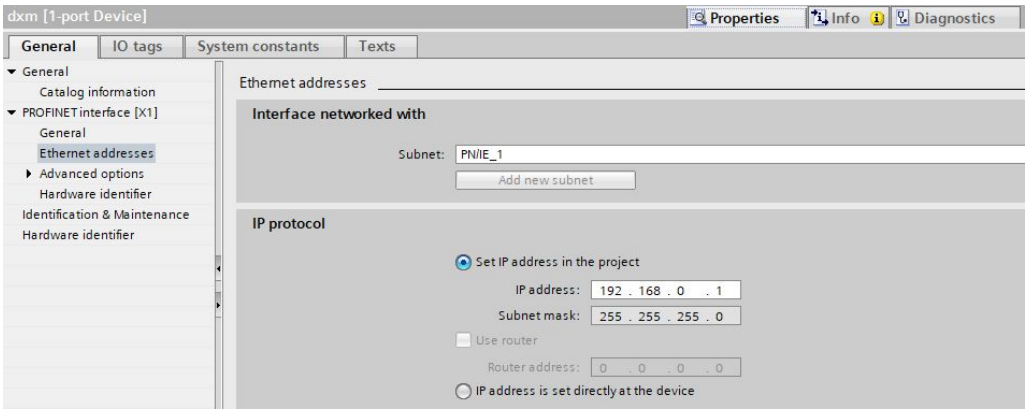

10. Select **Set IP address in the project**.
11. Enter the IP address.
12. Right-click on the device icon and select **Online & diagnostics**.

Online & diagnostics menu and screen

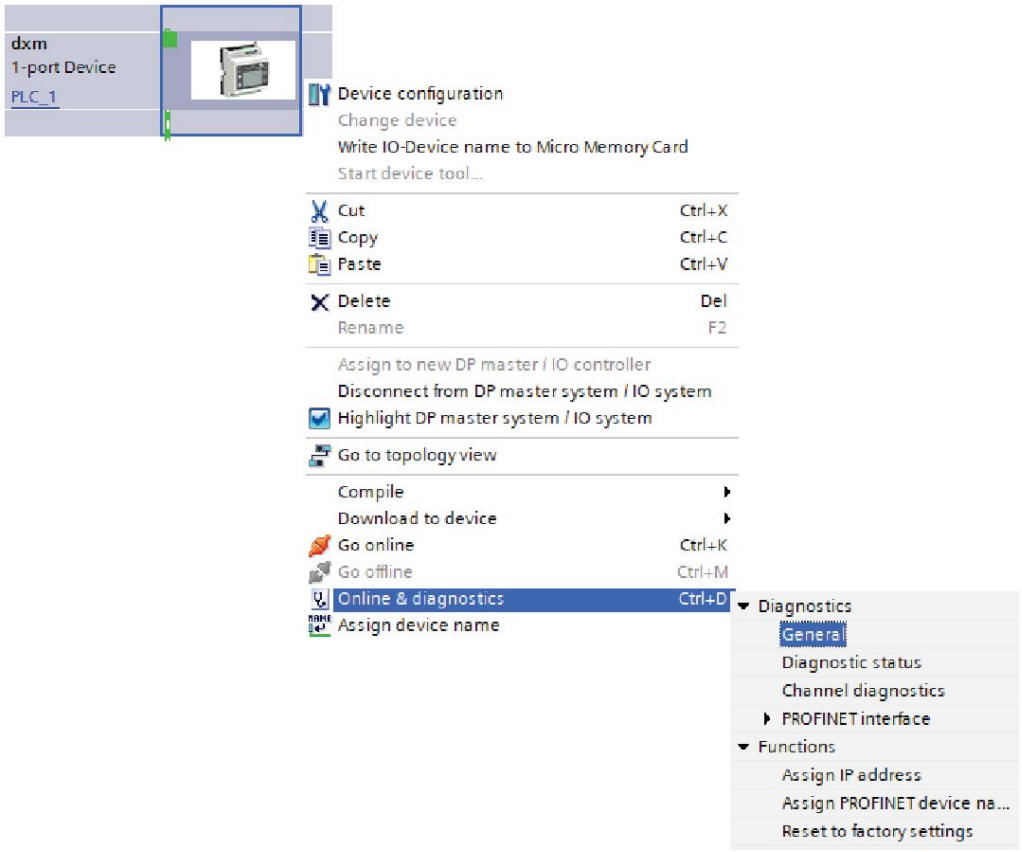

The **Online & diagnostics** windows displays.

13. Select **Assign IP address** under **Functions**.
14. Click **Accessible devices**.
    The Select device window searches the network for available devices.
15. Determine the device to be adjusted via the MAC address and select it.
16. Click **Apply**.
    The IP address for the device is updated.
17. Click **Assign IP address** to complete the step.

© Banner Engineering Corp. All rights reserved.
www.bannerengineering.com

This step is completed for every device.

By default, each DXM shipped from the factory is assigned the IP address 192.168.0.1.

Immediately after the PROFINET protocol is enabled, the DXM has an IP address of 0.0.0.0. We recommend using the TIA Portal to give the DXM an IP address so that the address is saved in the unit. When the PLC powers up, this IP address is accessible. The PLC can change the IP address if it is configured to do so.

If the PLC assigns the DXM IP address (for example, using the Set IP address in the project option in Siemens TIA Portal), the DXM receives the specified address, but only after the program has been loaded into the PLC and is running. If the DXM is restarted after it was discovered and configured by the PLC, the DXM retains the IP address that was assigned to it using the LCD or software until after the PLC discovers the DXM and assigns it the specified address again. However, if this address is different than what is specified in the PLC, the DXM reverts to the address specified in the PLC after the PLC becomes active again.

These configuration options conform to the PROFINET standard.

Change the Device Name

Follow these instructions to change the name of the DXM using the Siemens TIA Portal (v14) software. Use these instructions as a basis if you are using another controller (PLC).

1. Open a project and click on **Devices & networks**.
   The Network view displays.
2. Right-click on the DXM icon and select **Assign device name**.
   The **Assign PROFINET device name** window displays. The software searches for devices of the same type.
3. Enter the desired name in the **PROFINET device name** field. Note that each name can be used only once.
4. Click **Assign name**.
   The device now has a PROFINET name.

© Banner Engineering Corp. All rights reserved.

Chapter Contents

Chapter 10 Accessories

For a complete list of all the accessories for the Sure Cross wireless product line, please download the Banner Industrial Wireless Accessories list (p/n b_3147091).

Cordsets

BC-M12F5-22-2—5-pin M12, straight, single-ended, 2 m
BC-M12F5-22-10—5-pin M12, straight, single-ended, 10 m
BC-M12F5A-22-2—5-pin M12, right-angle, single-ended, 2 m
BC-M12F5A-22-10—5-pin M12, right-angle, single-ended, 10 m
BCD-M12DM-RJ45-5—RJ45 to 4-pin Male D-Code M12, Straight, 5 m
BCD-M12DM-RJ45-15—RJ45 to 4-pin Male D-Code M12, Straight, 15 m
BCD-M12DM-RJ45-26—RJ45 to 4-pin Male D-Code M12, Straight, 26 m

Cellular Communications—Controllers accept Banner LTE-M (CATM1) modems only. Cellular modems are ordered separately as accessories under the following part numbers:

- LTE CAT-M1 AT&T (North America only):**SXI-CATM1ATT-001**
- LTE CAT-M1 Verizon (United States only): **SXI-CATM1VZW-001**
- LTE CAT-M1/NB-IoT Multi-Carrier (Europe only): **SXI-CATM1WW-001**

Power Supplies

PSD-24-4—DC Power Supply, Desktop style, 3.9 A, 24 V DC, Class 2, 4-pin M12 quick disconnect (QD)
PSDINP-24-06—DC power supply, 0.63 Amps, 24 V DC, with DIN Rail Mount, Class I Division 2 (Groups A, B, C, D) Rated
PSDINP-24-13 —DC power supply, 1.3 Amps, 24 V DC, with DIN Rail Mount, Class I Division 2 (Groups A, B, C, D) Rated
PSDINP-24-25 — DC power supply, 2.5 Amps, 24 V DC, with DIN Rail Mount, Class I Division 2 (Groups A, B, C, D) Rated
PSW-24-1—DC power supply with multi-blade wall plug, 100–240 V AC 50/60 Hz input, 24 V DC 1 A output, UL Listed Class 2, 4-pin female M12 connector

© Banner Engineering Corp. All rights reserved.
www.bannerengineering.com

Chapter Contents

File System and Archive Process 70
Updating Your DXM Processor Firmware (Version 2 or Later) 71
Clear the Password on DXM700-Bx, DXM1000-Bx, or DXM1200-Bx Models 72
DXM1200 Documentation 73
DXM Support Policy 73
Contact Us 74
FCC and ISED Certification for 900 MHz 74
FCC and ISED Certification for 2.4 GHz 75
Mexican Importer 76
ANATEL 76
Warnings 76
Banner Engineering Corp Limited Warranty 77

Chapter 11 Product Support and Maintenance

File System and Archive Process

The DXM file system consists of two physical components: the serial EEPROM that stores non-volatile configuration information and a local storage device that stores file backup data and user-created files.

EEPROM Files—The serial EEPROM stores basic data that is required to be non-volatile, including network configuration data, IP address, MAC address, network masks, firewall settings, and authentication information. The controller XML configuration file created by the DXM Configuration Software is stored in EEPROM. The small section of non-volatile local registers is also stored in EEPROM.

Local Storage Device Files—The local storage device (micro SD card or embedded flash memory chip) contains most files at the root level. The archive directory contains files kept by the system for history backup. Archive files are stored in the directory **_sxi** and are only accessible by removing the local storage device.

- Data Log Files
- HTTP Push Files
- User-created ScriptBasic file
- ScriptBasic program file
- CmVMon file
- _sxi Archive directory

Data Log files

Users may create up to four data log files using the DXM Configuration Software. The log files are stored in the root directory on the local storage device. When the file size limit is reached, the filename is changed to include the date and time and the file is moved into the archive directory **_sxi**. Archived log files are deleted based on the Clear Logs parameter.

HTTP Push File

If the DXM1200 is configured to send data to a webserver or host system, the device creates an HTTP.LOG file on the local storage device. The HTTP log is created only if the Logging Interval is non-zero and the HTTP enable log is set. An entry is placed in the HTTP log file at the Logging Interval specified by the user. At the Push Interval time, the HTTP log file is sent to the webserver or host system. If the transmission is successful, the HTTP log file is time-stamped and placed into the archive directory (**_sxi**). If the transmission fails, the file remains in the root directory and subsequent Logging Intervals are appended to the file and are sent at the next Push Interval. See "Ethernet and Cellular Push Retries" on page 61.

User Created ScriptBasic Files

Users may use ScriptBasic to create files on the local storage device by using the FILEOUT function. The filenames are fixed and up to five files can be created in the root directory.

ScriptBasic Program File

The main ScriptBasic program that runs at boot time is stored on the local storage device in the root directory.

CmVMon File

The CmVMon.txt file (Cellular milli-Volt Monitor) is created by the system and is used to track power events. Every power-up cycle is date/time stamped with the voltage read from the I/O board. The value 24487 is equal to 24.487 volts. If the voltage drops below 11.2 V, another entry is put in the log file indicating the cellular modem will shut down.

CM	2015-09-22 18:52:43	VMon	Power entered normal range 24487
CM	2015-10-13 20:49:47	VMon	Power entered normal range 24004
CM	2015-10-16 15:00:20	VMon	Power entered normal range 24014
CM	2015-10-19 19:12:26	VMon	Power entered normal range 12845

© Banner Engineering Corp. All rights reserved.
www.bannerengineering.com

_sxi Archive Directory

Only two types of files are moved into the archive directory: data log files and HTTP log files. Data log files are date/time stamped and placed into the archive directory when the size limit is reached. HTTP log files are date/time stamped then placed into the archive directory when they are successfully sent to the webserver or host system. If the HTTP log files were not successfully sent after the retries have been exhausted, the files are placed into a root directory called **sav**.

Updating Your DXM Processor Firmware (Version 2 or Later)

DXMs with processor firmware version 2.0 or later have a built-in boot loader program to update the firmware. Use the configuration software version 3 or later, the BannerCDS webserver, or manually write the files on the SD card to update the firmware.

The new firmware file loads into the **BOOT** directory of the SD card on the DXM. The configuration software or BannerCDS website handles the reprogramming process automatically. During the programming process, the internal LEDs on the processor board indicate the status of the programming.

Update process overview

Reprogramming Step	Approximate time required	Description
Loading new firmware file (*.HEX)	Configuration software: 2 minutes over Ethernet or 15 minutes over USB BannerCDS: 2 minutes over Ethernet or 5 minutes over Cellular	Send the new firmware image to the DXM. After the new image is on the device, the controller resets. LED3 is red during the loading process.
Verify the contents of the new firmware file	1 minute	When the DXM finds a file that should be installed, LED4 (amber) flashes at about a 1 second rate while the contents of the file are validated.
New firmware file is valid		After validation successfully completes, LED4 is on (amber).
New firmware file is being loaded	2 minutes; do not remove power to the DXM during the programming process.	LED3 (red) blinks approximately once per second. LED3 continues to blink during the application programming process.
Finished		After programming has completed, the DXM resets and begins running the new firmware

The firmware file names follow an 8.3 filename convention. The first 5 characters are the firmware part number in hexadecimal; the last 3 characters of the part number are the major/minor version number. For example, if `30FA9052.hex` is the firmware programming file, 200617 decimal (30FA9 hex) is the firmware part number and 0.5.2 (0502) is the decoded version number.

Update the DXM Processor Firmware Using the DXM Configuration Software

To update your processor firmware using the DXM Configuration Software, follow these instructions.

1. Using the DXM Configuration Software, connect to the DXM via USB[4] or Ethernet.
   File loads to the DXM will take about 15 minutes using USB or approximately 2 minutes using Ethernet.
2. On the configuration software, go to the **Tools › Reprogram › Device Information** screen to verify the current firmware version and click **Get device information**.
   You must load a different version with the same firmware number for the boot loader to operate. Download firmware files from the Banner website.

[4] While the file download is in process over a USB connection, do not use other applications on the PC. After the DXM reboots for a firmware update, the USB port may be unresponsive. Clear the connection by disconnecting the USB cable and restarting the DXM Configuration Software.

© Banner Engineering Corp. All rights reserved.
www.bannerengineering.com

Reprogram screen

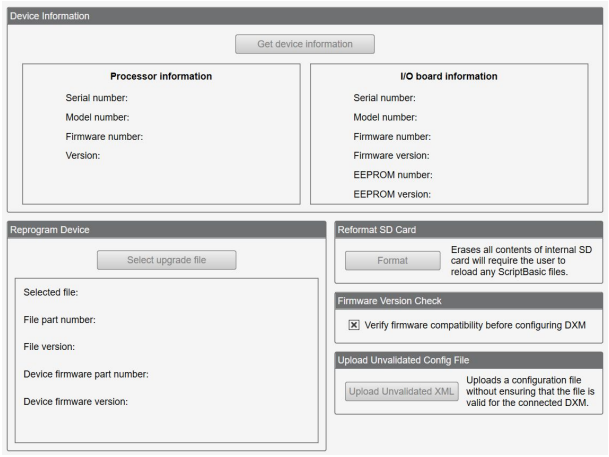

3. Select **Verify firmware compatibility before configuring DXM**.
4. Click **Select upgrade file**
5. Select the .HEX firmware file provided in the ZIP file you downloaded from www.bannerengineering.com.

   The upload process can be seen on the taskbar at the bottom of the software window. Do not do anything to the controller until the firmware update process has completed. This is a large file, so it can take up to 15 minutes to complete. After the green bar finishes, the DXM will reboot automatically. However, the DXM firmware update process is not yet complete. It may take another 5-10 minutes, during which there may not be visible activity. After the clock on the DXM's LCD resumes running and you are able to navigate the menu system using the arrows, the firmware update process is done.

Verify the firmware has been updated and the new file version information displays in the **Reprogram** screen.

Update Your Processor Firmware Using the BannerCDS Website

To update your processor firmware (version 2.0 or later) using the DXM website, follow these instructions.

To use the website to update the firmware file, first configure the DXM to push data to the website.

1. Go to **Dashboard › Sites** and click **+** to verify the current firmware part number and version on the DXM.



   Data collected from the DXM is displayed.
2. From the main **Dashboard › Sites** screen, click on **Update**.

   A popup box appears.
3. Set the **Communications Type** to **Push Reply**, and set the **Update Type** to **Firmware file**.
4. Choose the appropriate **Upload File** (*.HEX) and click **Queue**. Click **Close**.

   At the next scheduled push interval, the DXM retrieves the new firmware file. The new firmware file must be the same part number of firmware that is currently in the DXM.

Clear the Password on DXM700-Bx, DXM1000-Bx, or DXM1200-Bx Models

By default, the DXM Controllers do not require a password to load a configuration file. If a password is defined, the password must be entered before uploading a configuration file.

To change the password, you must already know the current password. If you do not know the current password, follow these steps to clear the password.

> **IMPORTANT:** Clearing the password erases the current configuration and any program files, log files, or history files.

© Banner Engineering Corp. All rights reserved.
www.bannerengineering.com

1. Turn on the power to the DXM Controller.
2. Set DIP switch 4 to the ON position.
3. Press and hold the processor button until the processor board LED flashes.
4. Set DIP switch 4 to the OFF position.
5. Cycle power to the DXM Controller.
6. Reload the configuration file before resuming normal operation.

DXM1200 Documentation

- DXM Wireless Controller Sell Sheet, p/n 194063
- DXM1200-B1 Wireless Controller Datasheet, p/n 196719
- DXM1200-B2 Wireless Controller Datasheet, p/n 238977
- DXM1200-Bx Wireless Controller Instruction Manual, p/n 216539
- DXM1200-X2 Wireless Controller Datasheet, p/n 238978
- DXM1200-X2 Controller Product Manual, p/n 239172
- DXM ScriptBasic Instruction Manual, p/n 191745
- DXM Controller Configuration Quick Start, p/n 191247
- DXM Configuration Software v4 (p/n b_4496867)
- DXM Configuration Software Instruction Manual, p/n 209933
- DXM EDS Configuration file for Allen-Bradley PLCs
- Activating a Cellular Modem (p/n b_4419353)
- Additional technical notes and videos

For more information about the DXM1200 family of products, including technical notes, configuration examples, and ScriptBasic program examples, please refer to the Banner website: www.bannerengineering.com

DXM Support Policy

The DXM Wireless Controllers are industrial wireless controllers that facilitate Industrial Internet of Things (IIoT) applications. As a communications gateway, it interfaces local serial ports, local I/O ports, and local ISM radio devices to the Internet using either a cellular connection or a wired Ethernet network connection. In a continuing effort to provide the best operation for the DXM, stay connected with Banner Engineering Corp to hear about the latest updates through the Banner website. Create a login today to stay informed of all Banner product releases.

Firmware Updates

The DXM has been designed to be a robust and secure IOT device. To provide the most reliable and secure device possible, periodic firmware updates are released to enhance and expand the capabilities of the DXM. Firmware updates and description details are found on the Banner website. Customers with critical update requirements will get access to pre-released firmware from the factory.

Website Information

The Banner website is the main method of disseminating DXM information to customers. The data found on the website include:

- DXM instruction manuals
- Configuration manuals
- Firmware downloads
- Firmware release notes
- Errata data, any known issues with a release of firmware
- Possible work-around solutions for known issues
- DXM Solutions Guides

Feature Requests

Our customer is our most valuable resource to improve our DXM. If you have suggestions for improvements to the DXM or configuration software, please contact Banner Engineering Corp.

© Banner Engineering Corp. All rights reserved.
www.bannerengineering.com

Potential DXM Issues

Potential issues with the DXM are collected from Banner's support engineers to provide solutions. Users can get help from the website documentation or by calling Banner Engineering for support help. Solutions are as simple as configuration adjustments, work-around configuration solutions, or potential new firmware updates.

DXM Security

The DXM was designed to collect local wireless sensor data, local sensor data, provide simple control, and send the data to the cloud.

The DXM does not run a Linux or Windows-based operating system but an embedded real-time operating system (RTOS) environment. As a proprietary operating system, the security aspects are easier to manage and minimize.

Security updates are released through the Banner Engineering Corp website (www.bannerengineering.com) and New Product Release Announcements (NPRA).

Contact Us

Banner Engineering Corp. | 9714 Tenth Avenue North | Plymouth, MN 55441, USA | Phone: + 1 888 373 6767

For worldwide locations and local representatives, visit www.bannerengineering.com.

FCC and ISED Certification for 900 MHz

This equipment contains transmitter module RM1809 or SX7023EXT.

Radio Module RM1809	Radio Module SX7023EXT
FCC ID: UE3RM1809	FCC ID: UE3SX7023EXT
IC: 7044A-RM1809	IC: 7044A-SX7023EXT
HVIN: RM1809	HVIN: 223150

FCC Notices

IMPORTANT: The transmitter modules RM1809 and SX7023EXT have been certified by the FCC / ISED for use with other products without any further certification (as per FCC section 2.1091). Changes or modifications not expressly approved by the manufacturer could void the user's authority to operate the equipment.

IMPORTANT: The transmitter modules RM1809 and SX7023EXT have been certified for fixed base station and mobile applications. If modules will be used for portable applications, the device must undergo SAR testing.

IMPORTANT: If integrated into another product, the FCC ID label must be visible through a window on the final device or it must be visible when an access panel, door, or cover is easily removed. If not, a second label must be placed on the outside of the final device that contains the following text:

Transmitter Module [RM1809 or SX7023EXT]
Contains FCC ID: [UE3RM1809 or UE3SX7023EXT]
Contains IC: [7044A-RM1809 or 7044A-SX7023EXT]
HVIN: [RM1809 or 223150]

This device complies with Part 15 of the FCC Rules. This equipment generates, uses, and can radiate radio frequency energy and, if not installed and used in accordance with the instruction manual, may cause harmful interference to radio communications. Operation is subject to the following two conditions: 1) This device may not cause harmful interference; and 2) This device must accept any interference received, including interference that may cause undesired operation.

Antenna WARNING: This device has been tested with Reverse Polarity SMA connectors with the antennas listed in "Certified Antennas for 900 MHz" on page 75. When integrated into OEM products, fixed antennas require installation preventing end-users from replacing them with non-approved antennas. Antennas not listed in the tables must be tested to comply with FCC Section 15.203 (unique antenna connectors), FCC Section 15.247 (emissions), and ISED RSS-Gen Section 6.8.

FCC and ISED Approved Antennas

WARNING: Antenna(s) used for this transmitter must be installed to provide a separation distance of at least 20 cm from all persons.

AVERTISSEMENT : Les antennes utilisées pour cet émetteur doivent être installées de manière à assurer une distance de séparation d'au moins 20 cm de toutes les personnes.

© Banner Engineering Corp. All rights reserved.

NOTICE: This equipment is approved only for mobile and base station transmitting devices. The antenna(s) used for this transmitter must not transmit simultaneously with any other antenna or transmitter, except in accordance with FCC multi-transmitter product procedures.

The radio transmitter modules RM1809 and SX7023EXT have been approved by FCC and ISED Canada to operate with the antenna types listed below, with the maximum permissible gain indicated. Antenna types not included in this list that have a gain greater than the maximum gain indicated for any type listed are strictly prohibited for use with this device.

Certified Antennas for 900 MHz

Model Number	Antenna Type	900 MHz Radio Module	Maximum Gain	Impedance	Minimum Required Cable/Connector Loss
-	Integral Antenna	RM1809	Unity gain		0
BWA-9O1-x	Omni, 1/4 wave dipole	RM1809	≤2 dBi	50 Ω	0
BWA-9O2-C	Omni, 1/2 wave dipole, Swivel	RM1809 or SX7023EXT	≤2 dBi	50 Ω	0
BWA-9O6-A	Omni Wideband, Fiberglass Radome	RM1809	≤8.2 dBi	50 Ω	2.2 dB
BWA-9O5-B	Omni Base Whip	RM1809	≤7.2 dBi	50 Ω	1.2 dB
BWA-9Y10-A	Yagi	RM1809	≤10 dBi	50 Ω	4 dB
BWA-9O5-C	Coaxial sleeve	SX7023EXT	≤5 dBi	50 Ω	0
BWA-9O6-AS	Omni	SX7023EXT	≤6 dBi	50 Ω	0

FCC and ISED Certification for 2.4 GHz

This equipment contains transmitter module DX80-2400 or SX243.

Radio Module DX80-2400	Radio Module SX243
FCC ID: UE300DX80-2400	FCC ID: UE3SX243
IC: 7044A-DX8024	IC: 7044A-SX243
HVIN: DX80G2 / DX80N2	HVIN: SX243

FCC Notices

IMPORTANT: The transmitter modules DX80-2400 and SX243 have been certified by the FCC / ISED for use with other products without any further certification (as per FCC section 2.1091). Changes or modifications not expressly approved by the manufacturer could void the user's authority to operate the equipment.

IMPORTANT: The transmitter modules DX80-2400 and SX243 have been certified for fixed base station and mobile applications. If modules will be used for portable applications, the device must undergo SAR testing.

IMPORTANT: If integrated into another product, the FCC ID/IC label must be visible through a window on the final device or it must be visible when an access panel, door, or cover is easily removed. If not, a second label must be placed on the outside of the final device that contains the following text:

Transmitter Module [DX80-2400 or SX243]
Contains FCC ID: [UE300DX80-2400 or UE3SX243]
Contains IC: [7044A-DX8024 or 7044A-SX243]
HVIN: [DX80G2, DX80N2 or SX243]

This device complies with Part 15 of the FCC Rules. This equipment generates, uses, and can radiate radio frequency energy and, if not installed and used in accordance with the instruction manual, may cause harmful interference to radio communications. Operation is subject to the following two conditions: 1) This device may not cause harmful interference; and 2) This device must accept any interference received, including interference that may cause undesired operation.

Antenna Warning: This device has been tested with Reverse Polarity SMA connectors with the antennas listed in "Certified Antennas for 2.4 GHz" on page 76. When integrated into OEM products, fixed antennas require installation preventing end-users from replacing them with non-approved antennas. Antennas not listed in the tables must be tested to comply with FCC Section 15.203 (unique antenna connectors), FCC Section 15.247 (emissions), and ISED RSS-Gen Section 6.8.

© Banner Engineering Corp. All rights reserved.
www.bannerengineering.com

FCC and ISED Approved Antennas

AVERTISSEMENT : Les antennes utilisées pour cet émetteur doivent être installées de manière à assurer une distance de séparation d'au moins 20 cm de toutes les personnes.

NOTICE: This equipment is approved only for mobile and base station transmitting devices. The antenna(s) used for this transmitter must not transmit simultaneously with any other antenna or transmitter, except in accordance with FCC multi-transmitter product procedures.

The radio transmitter modules DX80-2400 and SX243 have been approved by FCC and ISED Canada to operate with the antenna types listed below, with the maximum permissible gain indicated. Antenna types not included in this list that have a gain greater than the maximum gain indicated for any type listed are strictly prohibited for use with this device.

Certified Antennas for 2.4 GHz

Model	Antenna Type	2.4 GHz Radio Module	Maximum Gain	Impedance
	Integral antenna	DX80-2400 or SX243	Unity gain	
BWA-2O2-C	Omni, 1/2 wave dipole, Swivel	DX80-2400 or SX243	≤ 2 dBi	50 Ω
BWA-2O2-D	Omni, Dome, Box Mount	DX80-2400 or SX243	≤ 2 dBi	50 Ω
BWA-2O2-E	Omni, 1/4 wave dipole, Swivel	DX80-2400 or SX243	≤ 2 dBi	50 Ω
BWA-2O5-C	Omni, Collinear, Swivel	DX80-2400	≤ 5 dBi	50 Ω
BWA-2O5-MA	Omni, full-wave dipole, NMO	DX80-2400	≤ 4.5 dBi	50 Ω
BWA-2O6-A	Omni, Dome, Box Mount	DX80-2400	≤ 6 dBi	50 Ω
BWA-2O7-C	Omni, Coaxial Sleeve, Swivel	DX80-2400	≤ 7 dBi	50 Ω

Mexican Importer

Banner Engineering de Mèxico, S. de R.L. de C.V. | David Alfaro Siqueiros 103 Piso 2 Valle oriente | San Pedro Garza Garcia Nuevo Leòn, C. P. 66269

81 8363.2714

ANATEL

Este equipamento não tem direito à proteção contra interferência prejudicial e não pode causar interferência em sistemas devidamente autorizados. Para maiores informações, consulte o site da ANATEL www.gov.br/anatel/pt-br/

Warnings

WARNING:

- **Do not use this device for personnel protection**
- Using this device for personnel protection could result in serious injury or death.
- This device does not include the self-checking redundant circuitry necessary to allow its use in personnel safety applications. A device failure or malfunction can cause either an energized (on) or de-energized (off) output condition.

IMPORTANT: Please download the complete DXM1200-Bx Wireless Controller technical documentation, available in multiple languages, from www.bannerengineering.com for details on the proper use, applications, Warnings, and installation instructions of this device.

IMPORTANT: Por favor descargue desde www.bannerengineering.com toda la documentación técnica de los DXM1200-Bx Wireless Controller, disponibles en múltiples idiomas, para detalles del uso adecuado, aplicaciones, advertencias, y las instrucciones de instalación de estos dispositivos.

IMPORTANT: Veuillez télécharger la documentation technique complète des DXM1200-Bx Wireless Controller sur notre site www.bannerengineering.com pour les détails sur leur utilisation correcte, les applications, les notes de sécurité et les instructions de montage.

© Banner Engineering Corp. All rights reserved.

Install and properly ground a qualified surge suppressor when installing a remote antenna system. Remote antenna configurations installed without surge suppressors invalidate the manufacturer's warranty. Keep the ground wire as short as possible and make all ground connections to a single-point ground system to ensure no ground loops are created. No surge suppressor can absorb all lightning strikes; do not touch the Sure Cross® device or any equipment connected to the Sure Cross® device during a thunderstorm.

Exporting Sure Cross® Radios. It is our intent to fully comply with all national and regional regulations regarding radio frequency emissions. **Customers who want to re-export this product to a country other than that to which it was sold must ensure the device is approved in the destination country.** The Sure Cross wireless products were certified for use in these countries using the antenna that ships with the product. When using other antennas, verify you are not exceeding the transmit power levels allowed by local governing agencies. This device has been designed to operate with the antennas listed on Banner Engineering's website and having a maximum gain of 9 dBm. Antennas not included in this list or having a gain greater than 9 dBm are strictly prohibited for use with this device. The required antenna impedance is 50 ohms. To reduce potential radio interference to other users, the antenna type and its gain should be so chosen such that the equivalent isotropically radiated power (EIRP) is not more than that permitted for successful communication. Consult with Banner Engineering Corp. if the destination country is not on this list.

IMPORTANT:

- **Never operate a radio without connecting an antenna**
- Operating radios without an antenna connected will damage the radio circuitry.
- To avoid damaging the radio circuitry, never apply power to a Sure Cross® Performance or Sure Cross® MultiHop radio without an antenna connected.

IMPORTANT:

- **Electrostatic discharge (ESD) sensitive device**
- ESD can damage the device. Damage from inappropriate handling is not covered by warranty.
- Use proper handling procedures to prevent ESD damage. Proper handling procedures include leaving devices in their anti-static packaging until ready for use; wearing anti-static wrist straps; and assembling units on a grounded, static-dissipative surface.

Banner Engineering Corp Limited Warranty

Banner Engineering Corp. warrants its products to be free from defects in material and workmanship for one year following the date of shipment. Banner Engineering Corp. will repair or replace, free of charge, any product of its manufacture which, at the time it is returned to the factory, is found to have been defective during the warranty period. This warranty does not cover damage or liability for misuse, abuse, or the improper application or installation of the Banner product.

THIS LIMITED WARRANTY IS EXCLUSIVE AND IN LIEU OF ALL OTHER WARRANTIES WHETHER EXPRESS OR IMPLIED (INCLUDING, WITHOUT LIMITATION, ANY WARRANTY OF MERCHANTABILITY OR FITNESS FOR A PARTICULAR PURPOSE), AND WHETHER ARISING UNDER COURSE OF PERFORMANCE, COURSE OF DEALING OR TRADE USAGE.

This Warranty is exclusive and limited to repair or, at the discretion of Banner Engineering Corp., replacement. **IN NO EVENT SHALL BANNER ENGINEERING CORP. BE LIABLE TO BUYER OR ANY OTHER PERSON OR ENTITY FOR ANY EXTRA COSTS, EXPENSES, LOSSES, LOSS OF PROFITS, OR ANY INCIDENTAL, CONSEQUENTIAL OR SPECIAL DAMAGES RESULTING FROM ANY PRODUCT DEFECT OR FROM THE USE OR INABILITY TO USE THE PRODUCT, WHETHER ARISING IN CONTRACT OR WARRANTY, STATUTE, TORT, STRICT LIABILITY, NEGLIGENCE, OR OTHERWISE.**

Banner Engineering Corp. reserves the right to change, modify or improve the design of the product without assuming any obligations or liabilities relating to any product previously manufactured by Banner Engineering Corp. Any misuse, abuse, or improper application or installation of this product or use of the product for personal protection applications when the product is identified as not intended for such purposes will void the product warranty. Any modifications to this product without prior express approval by Banner Engineering Corp will void the product warranties. All specifications published in this document are subject to change; Banner reserves the right to modify product specifications or update documentation at any time. Specifications and product information in English supersede that which is provided in any other language. For the most recent version of any documentation, refer to: www.bannerengineering.com.

For patent information, see www.bannerengineering.com/patents.

© Banner Engineering Corp. All rights reserved.
www.bannerengineering.com

LinkedIn

X

Facebook

Instagram



© 2026. All rights reserved.