# D12 Series DIN Rail High Power Fiber **Optic** Sensor

more sensors, more solutions

## Datasheet

*Powerful Self-Contained Sensors for Use with Glass or Plastic Fiber Optic Assemblies*

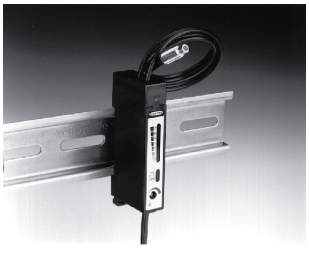

- Fiber optic sensors for DIN rail mounting; cabled or quick disconnect (QD)
- Fast response: 500 µs standard, 50 µs for Y & Y1 models
- Visible red light source; models for use with either glass or plastic fibers
- Choice of either NPN (sinking) or PNP (sourcing) complementary outputs; 150 mA maximum (continuous) load
- Normally closed output of most models may be wired as a diagnostic alarm output (depending upon hookup to power)
- Sensors operate from 10 V dc to 30 V dc
- LED indicators for Power On and N.O. Output Conducting
- 7-segment LED bargraph indicates received signal strength, output overload, and marginal excess gain

WARNING: Not To Be Used for Personnel **Protection**

Never use this device as a sensing device for personnel **protection.** Doing so could lead to serious injury or death. This device does not include the self-checking redundant circuitry necessary to allow its use in personnel safety applications. A sensor failure or malfunction can cause either an energized or de-energized sensor output condition.

CAUTION: **Electrostatic** Discharge (ESD)

ESD **Sensitive** Device. Use proper handling procedures to prevent ESD damage to these devices. The module does not contain any specific ESD protection beyond the structures contained in its integrated circuits. Proper handling procedures should include leaving devices in their anti-static packaging until ready for use; wearing anit-static wrist straps; and assembling units on a grounded, static-dissipative surface.

## Models

| Glass Fiber **Optic** Sensors | | | |
|---|---|---|---|
| Models[1] | Output Type | Response Speed | Range |
| D12SN6FV(Q) | NPN | Standard 500 µs response time | See the performance curves |
| D12SN6FVY(Q) | NPN | Selectable 50 µs high speed response mode | |
| D12SN6FVY1(Q) | NPN | Selectable 50 µs high speed response mode and 20 ms pulse stretcher | |
| D12SP6FV(Q) | PNP | Standard 500 µs response time | |
| D12SP6FVY(Q) | PNP | Selectable 50 µs high speed response mode | |
| D12SP6FVY1(Q) | PNP | Selectable 50 µs high speed response mode and 20 ms pulse stretcher | |

| **Plastic** Fiber **Optic** Sensors | | | |
|---|---|---|---|
| Models[1] | Output Type | Response Speed | Range |
| D12SN6FP(Q) | NPN | Standard 500 µs response time | See the performance curves |
| D12SN6FPY(Q) | NPN | Selectable 50 µs high speed response mode | |
| D12SN6FPY1(Q) | NPN | Selectable 50 µs high speed response mode and 20 ms pulse stretcher | |
| D12SP6FP(Q) | PNP | Standard 500 µs response time | |
| D12SP6FPY(Q) | PNP | Selectable 50 µs high speed response mode | |
| D12SP6FPY1(Q) | PNP | Selectable 50 µs high speed response mode and 20 ms pulse stretcher | |

## Overview

D12 sensors are compact, self-contained visible-red fiber optic sensors for DIN rail mounting. D12 sensors are designed for use with Banner glass and cut-to-length plastic fiber optics. Standard D12FP and D12FV plastic and glass fiber optic sensors offer fast 0.5 millisecond (500 µs) response. D12FVY Series and D12FPY Series sensors have switch-selectable 50 µs/500 µs response modes for applications that require a faster, high speed response time. D12FVY1 and D12FPY1 models have switch-selectable response times along with a built-in 20 ms pulse stretcher for use with loads (or input circuits) that are too slow to react to quick sensing events when using the 50 µs response mode.

[1] Include "Q" in model suffix to specify 6-inch cable with 4-pin pico-style QD. Omit "Q" to specify models with 6-foot attached cable. Models with 30-foot attached cable are available.



ПРОМЭЛЕКТРОНИКА/ sales@prom-elec.com

All models operate from 10 V dc to 30 V dc. D12 sensors are available with a choice of NPN or PNP complementary outputs (one output normally open, one output normally closed). The normally closed output of FP and FV models (only) may be used as a diagnostic alarm output, depending on the wiring of the sensor to the power supply. All models are available with either an attached cable or a 6-inch cable with a pico-style quick disconnect connector.

Plastic fiber models may be used with either the small diameter (0.254 mm and 0.508 mm/0.010 inch and 0.020 inch) or the large diameter (1.06 mm/ 0.040 inch) Banner cut-to-length plastic fibers.

LED Indicators

Two top-mounted LED indicators:

- Green = dc power on
- Amber = Normally Open Output Conducting

Seven-Segment Moving-Dot LED Bargraph

On all D12 sensors operating in the 500 µs (standard) response mode, a red seven-segment moving-dot LED bargraph illuminates to indicate the relative strength of the received light signal. This feature simplifies the sensitivity adjustment and fiber optic alignment, and provides a constant reference over time for overall sensing system performance.

In all models and in both response modes, segment #1 of the bargraph flashes to indicate an output overload.

On all sensors operating in the 500 µs response mode, segment #7 flashes to indicate marginal excess gain.

On standard (FP and FY) models, a flashing LED corresponds to the On state of the D12's alarm output.

Note: The seven segment bargraph and marginal excess gain indication (segment #7) are inoperative in the 50 µs response mode on Y and Y1 models.

Sensivity Control

D12s have a 15-turn sensitivity control, with a slotted brass screw clutched at both ends of travel.

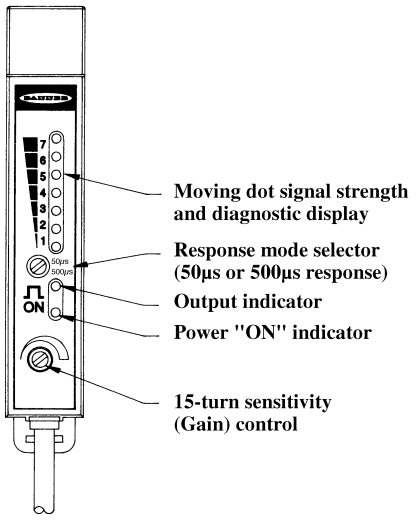


*Figure 1. Features*

## Installing Glass Fibers

1. Gently seat an o-ring onto each sensor end of the fiber.

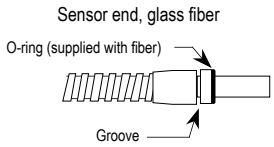


2. Slide the sensor ends into the fiber ports as far as they will go.
3. Push firmly on the fiber ends to compress the o-ring, and while holding the sensor ends snugly in place, slide the fiber retaining clip into the slot.
4. Press the retaining clip in until it snaps into the groove.

## Installing **Plastic** Fibers

1. Cut the fiber ends according to the instructions included with the fibers.
2. Slide the fiber gripper up (open).
3. If you are using 0.254 mm or 0.508 mm (0 .010 inch or 0.020 inch) diameter fibers: Insert the adaptor into the ports as far as it will go.

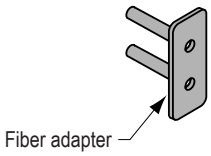


4. For all fiber diameters: Insert the prepared plastic fiber sensor ends gently into the ports as far as they will go.
5. Slide the fiber gripper back down to lock it.

## Wiring Diagrams

NPN (Sinking) Standard Wiring

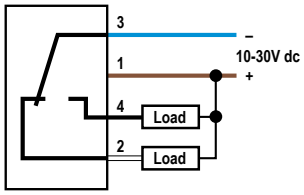


NPN (Sinking) Alarm Wiring

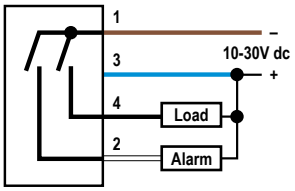


PNP (Sourcing) Standard Wiring

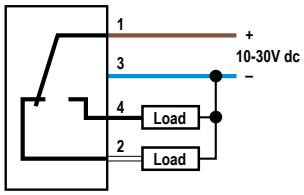


PNP (Sourcing) Alarm Wiring

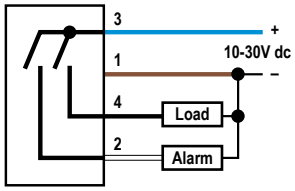


# Specifications

Sensing Range
See the excess gain curves; *Performance Curves—Glass Fiber Optic Sensors* on page 5 and *Performance Curves—Plastic Fiber Optic Sensors* on page 5

Sensing Beam
Visible red, 680 nm

Supply Voltage
10 V dc to 30 V dc at 45 mA maximum, exclusive of load
Protected against reverse polarity and inductive load transients

Output **Configurations**
Solid-state dc complementary outputs; see the models table for details.
The normally closed (N.C.) output of standard FP and FV models may be used as an alarm output, depending upon the hookup to the power supply.

Output **Rating**
Complementary outputs, one normally open (N.O.) and the other normally closed (N.C.). 150 mA maximum each output. No false pulse on power-up. (False pulse protection circuit causes a 0.1 second delay on power-up.) Short-circuit protected.
**Off-state** leakage current <10 µA at 30 V dc
On-state **saturation** voltage <1 V at 10 mA dc; <1.5 V at 150 mA dc
The total load may not exceed 150 mA

Response Time (FV, FP models)
500 µs on; 500 µs off
Repeatability is 130 µs

Response Time (FVY, FVY1, FPY, and FPY1 models)
FVY, FVY1, FPY, and FPY1 models have switch-selectable standard 500 µs response mode plus a high speed (50 µs on/off) mode. Repeatability in the high-speed (50 µs) mode is 15 µs. FPY1 and FVY1 models (when used in the 50 µs response mode) include a 20 ms pulse stretcher for use in applications in which the load (or input circuit) requires a longer input signal.
Response time and repeatability are independent of signal strength.

Adjustments
All models have a sensitivity control on top of the module (15-turn slotted brass screw, clutched at both ends of travel). FVY and FPY (high speed models) also have a top-mounted response mode selector switch.

**Construction**
Black ABS housing with transparent acrylic cover. The fiber clamping element is acetal. Stainless steel M3 × 0.5 hardware for use with mounting bracket (supplied).

**Connections**
2 m (6.5-ft) or 9 m (30-foot) attached PVC-covered cable, or 6-inch cable with pico-type 4-pin QD connector

**Mounting** Bracket
D12 Series sensors mount directly to a standard DIN rail, or may be through-hole mounted using the supplied mounting bracket and M3 x 0,5 hardware
Bracket material is black PBT polyester

Environmental **Rating**
NEMA 2; IEC IP11

**Operating Conditions**
**Operating** Temperature: –20 °C to +70 °C (–4 °F to +158 °F)
90% at +50 °C maximum relative humidity (non-condensing)

**Application** Notes
D12 Series sensors are designed to deliver very high optical energy (excess gain). They should not be used for applications which offer low optical contrast (that is, only a small difference in received light levels between the light and dark sensing conditions). Examples include diffuse mode sensing of objects in front of a reflective background and opposed mode sensing of non-opaque materials.

D12 sensors excel in applications requiring high excess gain (for example, for long-range sensing, sensing with long fiber lengths, diffuse sensing of materials with low reflectivity, etc.).

Required Overcurrent **Protection**

WARNING: Electrical connections must be made by qualified personnel in accordance with local and national electrical codes and regulations.

Overcurrent protection is required to be provided by end product application per the supplied table.
Overcurrent protection may be provided with external fusing or via Current Limiting, Class 2 Power Supply.
Supply wiring leads < 24 AWG shall not be spliced.
For additional product support, go to *http://www.bannerengineering.com*.

| Supply Wiring (AWG) | Required Overcurrent **Protection** (Amps) |
|---|---|
| 20 | 5.0 |
| 22 | 3.0 |
| 24 | 2.0 |
| 26 | 1.0 |
| 28 | 0.8 |
| 30 | 0.5 |

**Certifications**

## Dimensions and Features—Glass Fiber **Optic** Models

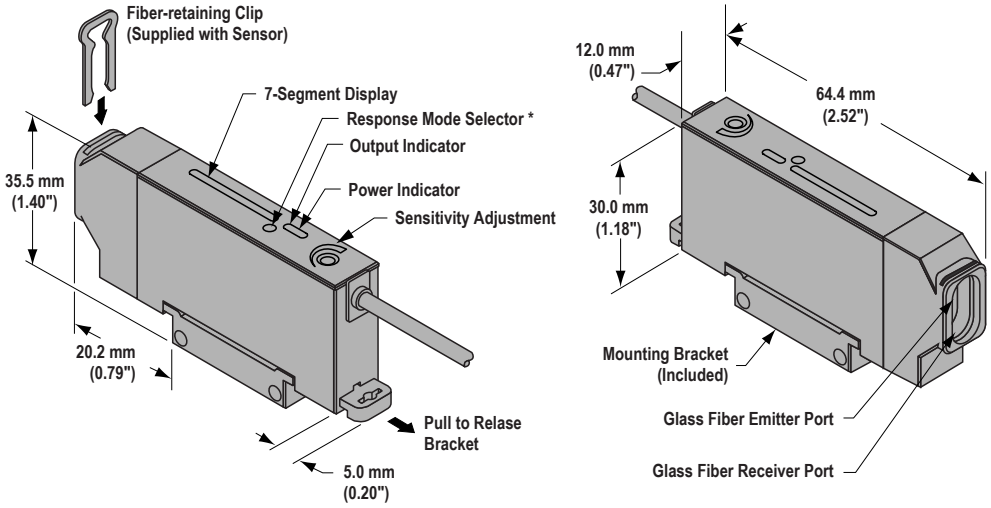


*** Response Mode Selection on FVY and FVY1 models only**

## Dimensions and **Features—Plastic** Fiber **Optic** Models

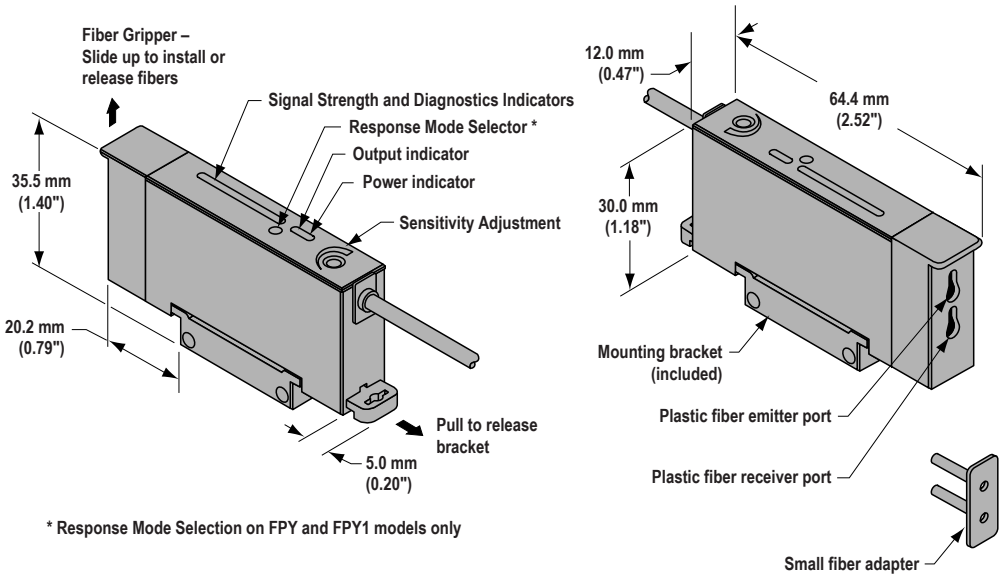


*** Response Mode Selection on FPY and FPY1 models only**

## Dimensions—D12 Bracket

D12 Sensors mount directly to a standard 35 mm DIN rail, or may be through-hole mounted using the supplied mounting bracket and stainless steel M3 × 0.5 hardware.

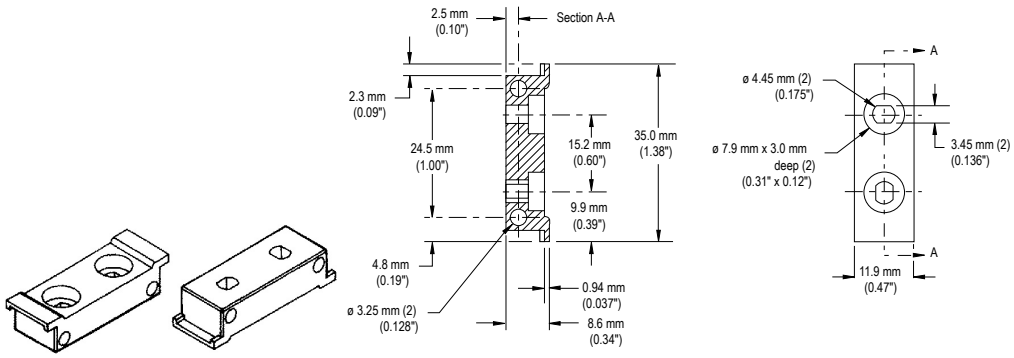

## Performance Curves—Glass Fiber **Optic** Sensors

**Diffuse** Mode

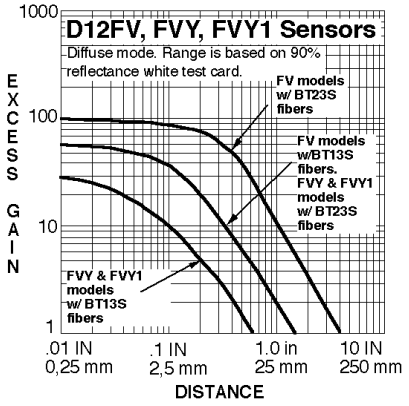


Opposed Mode

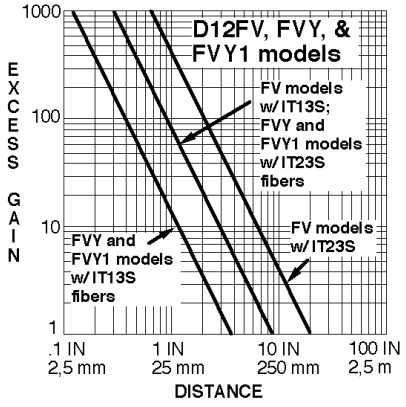


## Performance **Curves—Plastic** Fiber **Optic** Sensors

**Diffuse** Mode—0.020 Inch Fibers

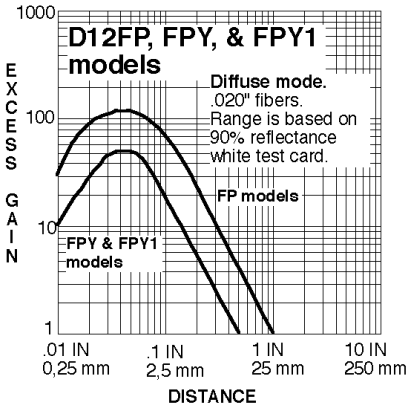


**Diffuse** Mode—0.040 Inch Fibers

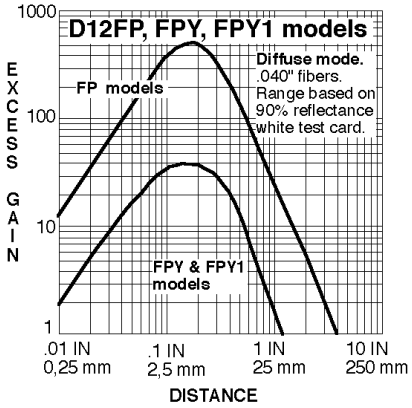


Opposed Mode—0.020 Inch Fibers

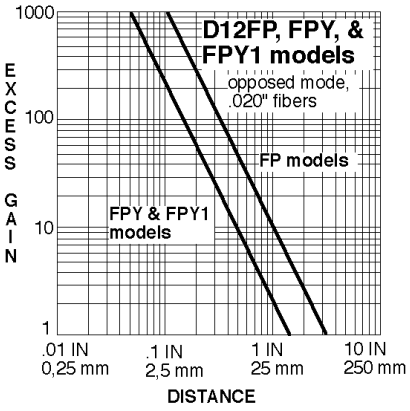


Opposed Mode—0.040 Inch Fibers

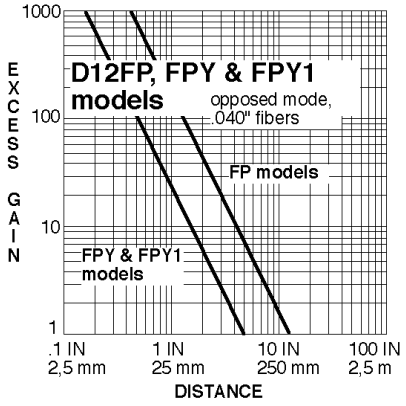


Opposed Mode—0.040 Inch Fibers and Model L2 Lenses for Extended Sensing Range

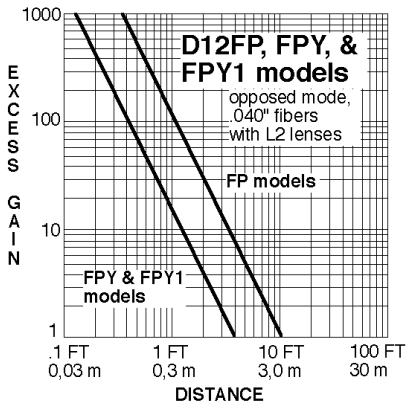

# Banner Engineering Corp. Limited Warranty

Banner Engineering Corp. warrants its products to be free from defects in material and workmanship for one year following the date of shipment. Banner Engineering Corp. will repair or replace, free of charge, any product of its manufacture which, at the time it is returned to the factory, is found to have been defective during the warranty period. This warranty does not cover damage or liability for misuse, abuse, or the improper application or installation of the Banner product.

THIS LIMITED WARRANTY IS EXCLUSIVE AND IN LIEU OF ALL OTHER WARRANTIES WHETHER EXPRESS OR IMPLIED (INCLUDING, WITHOUT LIMITATION, ANY WARRANTY OF MERCHANTABILITY OR FITNESS FOR A PARTICULAR PURPOSE), AND WHETHER ARISING UNDER COURSE OF PERFORMANCE, COURSE OF DEALING OR TRADE USAGE.

This Warranty is exclusive and limited to repair or, at the discretion of Banner Engineering Corp., replacement. IN NO EVENT SHALL BANNER ENGINEERING CORP. BE LIABLE TO BUYER OR ANY OTHER PERSON OR ENTITY FOR ANY EXTRA COSTS, EXPENSES, LOSSES, LOSS OF PROFITS, OR ANY INCIDENTAL, CONSEQUENTIAL OR SPECIAL DAMAGES RESULTING FROM ANY PRODUCT DEFECT OR FROM THE USE OR INABILITY TO USE THE PRODUCT, WHETHER ARISING IN CONTRACT OR WARRANTY, STATUTE, TORT, STRICT LIABILITY, NEGLIGENCE, OR OTHERWISE.

Banner Engineering Corp. reserves the right to change, modify or improve the design of the product without assuming any obligations or liabilities relating to any product previously manufactured by Banner Engineering Corp. Any misuse, abuse, or improper application or installation of this product or use of the product for personal protection applications when the product is identified as not intended for such purposes will void the product warranty. Any modifications to this product without prior express approval by Banner Engineering Corp will void the product warranties. All specifications published in this document are subject to change; Banner reserves the right to modify product specifications or update documentation at any time. Specifications and product information in English supersede that which is provided in any other language. For the most recent version of any documentation, refer to: *www.bannerengineering.com*.



© Banner Engineering Corp. All rights reserved