M12 Class 2 Laser Emitter

Features

- Uses a self-contained Class 2 modulated laser emitter with a visible red beam
- Beam is bore-sighted to within 2 milliradians and 0.25 mm of the housing centerline
- Useful for long-range sensing, or for sensing very small objects or profiles; excellent mechanical repeatability in position-sensing applications
- Features 12.7 mm diameter smooth aluminum barrel
- 10 V DC to 30 V DC supply voltage
- Compatible with a variety of photoelectric receivers
- Features collimated, apertured beam 2 mm in diameter, divergence of less than 1 milliradian
- Delivers excellent mechanical repeatability in position-sensing applications
- Available with unterminated, 2 m (6.5 ft) cable or 150 mm (6 in) quick-disconnect cable
- Modulated beam (33 kHz, 25% duty cycle)



WARNING:

- **Do not use this device for personnel protection**
- Using this device for personnel protection could result in serious injury or death.
- This device does not include the self-checking redundant circuitry necessary to allow its use in personnel safety applications. A device failure or malfunction can cause either an energized (on) or de-energized (off) output condition.

CAUTION:

- **Never stare directly into the sensor lens.**
- Laser light can damage your eyes.
- Avoid placing any mirror-like object in the beam. Never use a mirror as a retroreflective target.

CAUTION:

- **Return defective units to the manufacturer.**
- Use of controls or adjustments or performance of procedures other than those specified herein may result in hazardous radiation exposure.
- Do not attempt to disassemble this sensor for repair. A defective unit must be returned to the manufacturer.

Models

Model	Range	Connector	Supply Voltage
M126E2LD	Range varies, depending on which receiver is used (see "M12 Excess Gain" on page 4)	2 m (6.5 ft) unterminated	10 V DC to 30 V DC
M126E2LDQ		150 mm (6 in) PVC-jacketed cable with a 3-pin M8 male quick-disconnect connector	

The 9 m (30 ft) PVC cable model (M126E2LD W/30) is no longer available for order, but is covered by the contents of this document. Models with a quick disconnect require a mating cordset.

Installation

Mount the M12 Laser Sensor

Mounting suggestions:

- To take advantage of the bore-sight beam placement offered by the M12 laser emitter, use a two-part clamp mount or a mounting block with a precision-drilled hole. Allow minimum clearance for the 12.7 mm (0.50 in) diameter housing, maximum diameter 12.83 mm (0.505 in).
- Clamp on both sides of the label. Do not clamp only on the labeled area. Use only plastic-tipped screws or set screws – not metal – to avoid compression of the housing.

Mounting bracket assembly model SMB46X3 is recommended for use with the M12. The assembly includes:

- A black-anodized aluminum block with holes drilled for mounting in any of 3 directions with plastic set screws
- An adjustable stainless-steel bracket with 3 spring-loaded screws (two of the screws are used for precise alignment)

The mounting block, model SMB127, can be ordered separately.

Original Instructions
08-Apr-26

© Banner Engineering Corp. All rights reserved.
www.bannerengineering.com

52989
p/n: 52989 Rev. G

ПРОМЭЛЕКТРОНИКА/ sales@prom-elec.com

Three Possible M12 Orientations

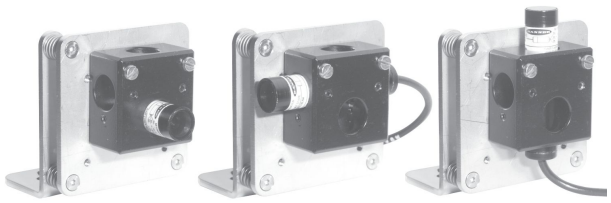

1. Insert the laser emitter into the SMB127 mounting block, through any of the three holes.
2. Make sure that the label area of the emitter is not aligned with a set screw.
3. Tighten the set screws, using the supplied 3/64-in Allen wrench, so that the emitter is held snugly in place.
4. Mount the block to the adjustable baseplate (or to your own bracket).
5. Mount the bracket base using your own M5 or #10 screws or bolts.
6. Check for alignment (see "M12 Laser Emitter Alignment" on page 2).
7. Tighten or loosen one or two of the precision alignment screws, using the supplied 2 mm Allen wrench, until the laser is accurately aligned.

M12 Laser Sensor Wiring

Quick disconnect wiring diagrams are functionally identical.

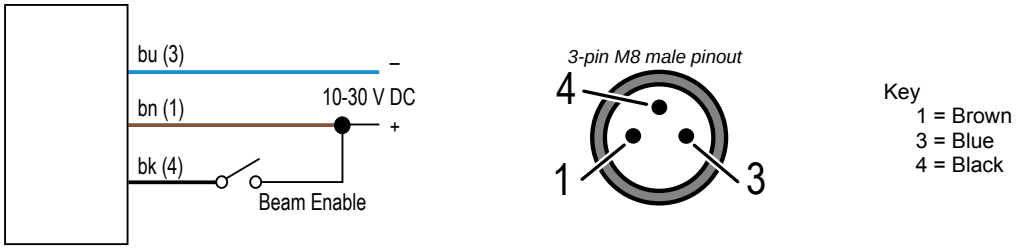

M12 Laser Emitter Alignment

M12 laser emitters have a beam divergence of only 0.03° (0.5 milliradians) at 25 °C (77 °F) ambient temperature. This translates, for example, to a beam diameter of only 9.5 mm (0.37 in) at a distance of 6.1 m (20 ft). Consequently, there is very little forgiveness for angular misalignment.

M12 laser emitter beam divergence at 25 °C (beam size vs. distance)

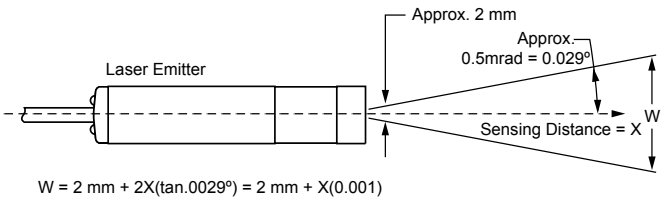

M12 laser emitter beam divergence at 25 °C (beam size vs. distance)

Opposed Distance (X)	Beam Width (W)
1.5 m (5 ft)	5.0 mm (0.20 in)
3 m (10 ft)	6.5 mm (0.26 in)
6 m (20 ft)	9.5 mm (0.37 in)
15 m (50 ft)	19 mm (0.75 in)
30 m (100 ft)	34 mm (1.34 in)

The beam size listed is also the effective beam size at the receiver. The effective beam is equal to the minimum opaque object profile required to block the light beam. The beam size at the emitter is 3.5 mm (0.14 in) diameter.

The effect of angular misalignment is dramatic. Laser emitters require their beam center to directly strike the receiver lens. "Figure: Beam displacement per degree of misalignment" on page 3 shows how far the laser beam will miss the center of the receiver lens for each degree

© Banner Engineering Corp. All rights reserved.
www.bannerengineering.com

of angular misalignment (in any plane). Note that even at only a 5 ft range, one degree of misalignment causes the laser beam to miss the lens of most receivers.

Beam displacement per degree of misalignment

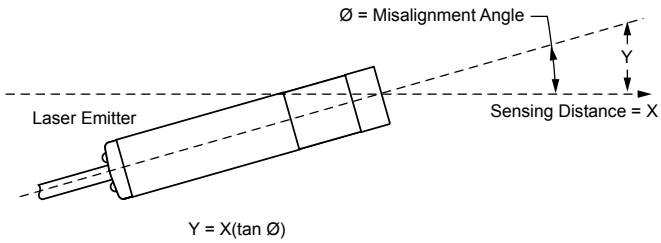

Beam displacement per degree of misalignment

Opposed Distance (X)	Beam Displacement (Y) for 1° of Misalignment
1.5 m (5 ft)	25 mm (1 in)
3 m (10 ft)	50 mm (2 in)
6 m (20 ft)	100 mm (4 in)
15 m (50 ft)	250 mm (10 in)
30 m (100 ft)	500 mm (20 in)

Alignment Tip: The visible red beam of the laser emitter is easily seen in subdued lighting.

Alignment:

1. At opposed distances of up to 3 m (10 ft), attach a sheet of white paper directly in front of the receiver lens.
2. Mark the location of the lens center on the paper. Use this mark as an aiming target.
3. Sight along the beam from directly behind the laser emitter.
4. Adjust the emitter mounting until the red image (the dot of red light) is centered exactly on the mark.
5. Remove the paper and check the response of the receiver.

For longer distances (up to 7.6 m or 25 ft), replace the white paper with a 102 mm × 102 mm (4 in × 4 in) square of high-grade retroreflective tape (Banner model BRT-THG-4X4-5 or equivalent). For greater distances, use a larger sheet of retroreflective material. Never use a mirror as an alignment target.

At long distances, use retroreflective tape to locate the beam at the receiver location.

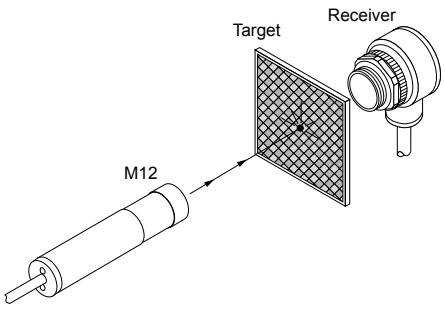

Specifications

Supply Voltage and Current

10 V DC to 30 V DC (10% max. ripple) at less than 30 mA

Supply Protection Circuitry

Protected against reverse polarity, transient voltages, and electrostatic discharge

Delay at Power-Up

Less than 30 milliseconds

Sensing Beam

Visible red Class 2 laser (temperature coefficient 0.2 nm/°C)

Rep Rate: 30 µs

See "Class 2 Laser Description and Safety Information" on page 4

Beam Diameter at Aperture

Approximately 3.5 mm (0.14 in) diameter

Beam Placement

Within 0.25 mm (0.01 in) and ±2 milliradians of the mechanical centerline axis of the housing

Beam Divergence

± 0.5 milliradians typical at 25° C; ±1.0 milliradians at operating temperature extremes

Laser Control

Beam enable: Apply + 10 V DC to 30 V DC to black wire

Beam inhibit: Apply 0 V or by opening the circuit

Enable delay: Less than 30 milliseconds

Inhibit delay: Less than 1 milliseconds

Indicators

Indicators are visible through the rear cover

Green indicates the power is applied

Amber indicates the laser is enabled

Connections

2 m (6.5 ft) unterminated 3-wire PVC-jacketed high-flex cable, 9 m (30 ft) unterminated 3-wire PVC-jacketed high-flex cable, or 150 mm (6 in) PVC-jacketed cable with a 3-pin M8 male quick-disconnect connector

Construction

12.7 mm (0.50 in) diameter smooth aluminum barrel; black hard-coat anodized finish

MIL-A-8625 Type 2, Class 2

© Banner Engineering Corp. All rights reserved.
www.bannerengineering.com

Operating Temperature

0 °C to +40 °C (+32 °F to +104 °F)
90% at +50 °C maximum relative humidity (non-condensing)

Environmental Rating

IP67

Effective Beam at Receiver at 25° C

Opposed Distance	Beam Width
1.5 m (5 ft)	5 mm (0.20 in)
3 m (10 ft)	6.5 mm (0.26 ft)
6 m (20 ft)	9.5 mm (0.37 ft)
15 m (50 ft)	19 mm (0.75 ft)
30 m (100 ft)	34 mm (1.34 in)

Certifications

Banner Engineering BV
Park Lane, Culliganlaan 2F bus 3
1831 Diegem, BELGIUM

Turck Banner LTD Blenheim House
Blenheim Court
Wickford, Essex SS11 8YT
GREAT BRITAIN

Dimensions

All measurements are listed in millimeters [inches], unless noted otherwise. The measurements provided are subject to change.

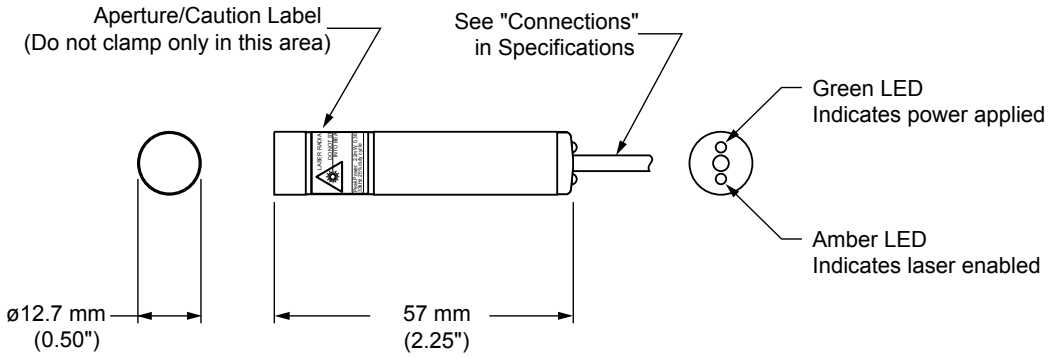

Excess Gain

The excess gain of the M12 emitter depends on the particular receiver used. The following compares the excess gain for various recommended receivers at 15 m (50 ft).

For information on the compatibility of the M12 emitter with other Banner photoelectric receivers, contact Banner Engineering.

MULTI-BEAM Models

SBRX1: 19,000
SBR1: 19,000
SBRXD1: 19,000
SBRD1: 19,000

MAXI-BEAM Models

RSBR: 14,000
RSBRSR: 1,500

VALU-BEAM Models

SMW95R: 34,000
SMI91RQD: 18,000

EZ-BEAM Models

T18SN6R: 7,500
T30SN6R: 7,500
S12SN6R: 7,500

MINI-BEAM Models

SM31R: 2,500
SM31RL: 17,000
SM31RMHS: 1,800
SM31RLMHS: 11,000

ECONO-BEAM Models

SE61R: 600
SE61RMHS: 500

Other Models

SM51RB: 1,200
Q23SN6R: 400
Q10AN6R: 250
Q45BB6R: 9,000

Class 2 Laser Description and Safety Information



Laser light. Do not stare into the beam.

Complies with 21 CFR 1040.10 and 1040.11 except for deviations pursuant to Laser Notice No. 56, dated May 8, 2019.

CLASS 2
LASER PRODUCT

CAUTION:

- **Never stare directly into the sensor lens.**
- Laser light can damage your eyes.
- Avoid placing any mirror-like object in the beam. Never use a mirror as a retroreflective target.

© Banner Engineering Corp. All rights reserved.
www.bannerengineering.com

CAUTION:
- **Return defective units to the manufacturer.**
- Use of controls or adjustments or performance of procedures other than those specified herein may result in hazardous radiation exposure.
- Do not attempt to disassemble this sensor for repair. A defective unit must be returned to the manufacturer.

CAUTION:
- **Ne regardez jamais directement la lentille du capteur.**
- La lumière laser peut endommager la vision.
- Évitez de placer un objet réfléchissant (de type miroir) dans la trajectoire du faisceau. N'utilisez jamais de miroir comme cible rétro-réfléchissante.

CAUTION:
- **Tout dispositif défectueux doit être renvoyé au fabricant.**
- L'utilisation de commandes, de réglages ou de procédures autres que celles décrites dans le présent document peut entraîner une exposition dangereuse aux radiations.
- N'essayez pas de démonter ce capteur pour le réparer. Tout dispositif défectueux doit être renvoyé au fabricant.

Class 2 lasers are lasers that emit visible radiation in the wavelength range from 400 nm to 700 nm, where eye protection is normally afforded by aversion responses, including the blink reflex. This reaction may be expected to provide adequate protection under reasonably foreseeable conditions of operation, including the use of optical instruments for intrabeam viewing.

Complies with IEC 60825-1:2014 and EN 60825-1:2014+A11:2021.

Class 2 Laser Safety Notes. Low-power lasers are, by definition, incapable of causing eye injury within the duration of a blink (aversion response) of 0.25 seconds. They also must emit only visible wavelengths (400 nm to 700 nm). Therefore, an ocular hazard may exist only if individuals overcome their natural aversion to bright light and stare directly into the laser beam.

For safe laser use:
- Do not stare at the laser.
- Do not point the laser at a person's eye.
- Mount open laser beam paths either above or below eye level, where practical.
- Terminate the beam emitted by the laser product at the end of its useful path.

IMPORTANT: This laser device is not bore-sighted.

Class 2 Laser Characteristics
Output power: <2.8 mW
Laser wavelength: 650 nm
Pulse duration: 7 µs

Accessories

Mounting Brackets

SMB46X3
- Assembly with mounting block and adjustable bracket
- Includes:
  - 2 mm Shortarm hex key
  - 3/64-in Shortarm hex key
  - 4 Set screws
- CAD Files: DXF, PDF, IGS, STP

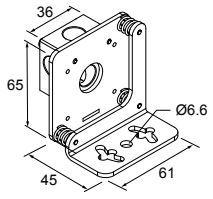

SMB127
- Mounting block only
- Includes:
  - 3/64-in Shortarm hex key
  - 4 Set screws
- CAD Files: DXF, PDF, IGS, STP

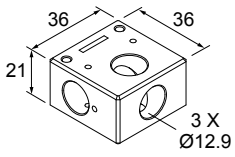

© Banner Engineering Corp. All rights reserved.
www.bannerengineering.com

Quick-Disconnect Cables

3-pin Single-Ended M8 Female Cordsets			
Model	**Length**	**Dimensions**	**Pinout (Female)**
PKG3M-2	2 m (6.56 ft)	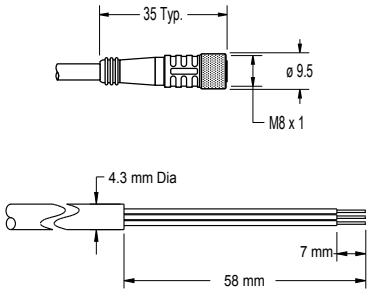	 1 = Brown 3 = Blue 4 = Black
PKG3M-4	4 m (13.12 ft)		
PKG3M-5	5 m (16.4 ft)		
PKG3M-7	7 m (22.96 ft)		
PKG3M-9	9 m (29.52 ft)		
PKG3M-10	10 m (32.81 ft)		

Retroreflective Tape

Model	Reflectivity Factor	Maximum Temperature	Size
BRT-THG-4X4-5	0.7	+60 °C (+140 °F)	100 × 100 mm (package of 5)

Model	Reflectivity Factor	Maximum Temperature	Size
BRT-THG-8.5X11-2	0.7	+60 °C (+140 °F)	216 × 280 mm (package of 2)

Model	Reflectivity Factor	Maximum Temperature	Size
BRT-THG-18X36	0.7	+60 °C (+140 °F)	457 × 914 mm (single sheet)

Banner Engineering Corp Limited Warranty

Banner Engineering Corp. warrants its products to be free from defects in material and workmanship for one year following the date of shipment. Banner Engineering Corp. will repair or replace, free of charge, any product of its manufacture which, at the time it is returned to the factory, is found to have been defective during the warranty period. This warranty does not cover damage or liability for misuse, abuse, or the improper application or installation of the Banner product.

THIS LIMITED WARRANTY IS EXCLUSIVE AND IN LIEU OF ALL OTHER WARRANTIES WHETHER EXPRESS OR IMPLIED (INCLUDING, WITHOUT LIMITATION, ANY WARRANTY OF MERCHANTABILITY OR FITNESS FOR A PARTICULAR PURPOSE), AND WHETHER ARISING UNDER COURSE OF PERFORMANCE, COURSE OF DEALING OR TRADE USAGE.

This Warranty is exclusive and limited to repair or, at the discretion of Banner Engineering Corp., replacement. **IN NO EVENT SHALL BANNER ENGINEERING CORP. BE LIABLE TO BUYER OR ANY OTHER PERSON OR ENTITY FOR ANY EXTRA COSTS, EXPENSES, LOSSES, LOSS OF PROFITS, OR ANY INCIDENTAL, CONSEQUENTIAL OR SPECIAL DAMAGES RESULTING FROM ANY PRODUCT DEFECT OR FROM THE USE OR INABILITY TO USE THE PRODUCT, WHETHER ARISING IN CONTRACT OR WARRANTY, STATUTE, TORT, STRICT LIABILITY, NEGLIGENCE, OR OTHERWISE.**

Banner Engineering Corp. reserves the right to change, modify or improve the design of the product without assuming any obligations or liabilities relating to any product previously manufactured by Banner Engineering Corp. Any misuse, abuse, or improper application or installation of this product or use of the product for personal protection applications when the product is identified as not intended for such purposes will void the product warranty. Any modifications to this product without prior express approval by Banner Engineering Corp will void the product warranties. All specifications published in this document are subject to change; Banner reserves the right to modify product specifications or update documentation at any time. Specifications and product information in English supersede that which is provided in any other language. For the most recent version of any documentation, refer to: www.bannerengineering.com.

For patent information, see www.bannerengineering.com/patents.

© Banner Engineering Corp. All rights reserved.
www.bannerengineering.com