# STB Self-Checking Optical Touch Buttons Product Manual

Original Instructions
p/n: 64136 Rev. I
03-Mar-26
© Banner Engineering Corp. All rights reserved. www.bannerengineering.com

ПРОМЭЛЕКТРОНИКА/ sales@prom-elec.com

# Contents

**Chapter 1 Features ..... 3**
Models ..... 3
Important - Read This Before Proceeding ..... 3
Applicable U.S. Standards ..... 4
Applicable International Standards ..... 4
EU/UK Declaration of Conformity (DoC) ..... 4
Overview ..... 4
Application Information ..... 5

**Chapter 2 Normal Operation ..... 6**
System Power-Up ..... 6
Run Mode ..... 6
Fault ..... 6
LED Indicators ..... 6

**Chapter 3 Installation ..... 7**
Two-Hand Control Safety Distance (Minimum Distance) ..... 8
U.S. Applications ..... 8
European Applications ..... 8
Example Separation Distance Calculation ..... 9
Wiring Diagrams ..... 9

**Chapter 4 Specifications ..... 11**
Safety Specifications ..... 11
Dimensions ..... 13

**Chapter 5 Accessories ..... 15**
Safety Controllers ..... 15
AT-FM-10K ..... 15
Cordsets ..... 15
Mounting Brackets ..... 16
Replacement Field Covers ..... 18

**Chapter 6 Product Support ..... 19**
Repairs and Translations ..... 19
Contact Us ..... 19
Banner Engineering Corp Limited Warranty ..... 19

© Banner Engineering Corp. All rights reserved. www.bannerengineering.com

Chapter Contents

Models ..... 3
Important - Read This Before Proceeding ..... 3
Overview ..... 4
Application Information ..... 5

# Chapter 1 Features



- Continuous internal self-checking operation
- Redundant microcontroller-based photoelectric touch buttons
- Ergonomically designed to eliminate hand, wrist, and arm stresses associated with repeated switch operation; requires no physical pressure to operate
- High excess gain cuts through heavy contamination
- Immune to ambient light, EMI, and RFI interference
- LED power, output, and fault indicators
- Pre-installed field covers protect the device and prevent inadvertent activation

**WARNING:**
**Not a Stand-Alone Safety Device.**

STB Series Touch Buttons are self-checking ergonomic actuating devices, but are not, by themselves, safety devices. To be used in a safety application, two STBs must be interfaced with a type IIIC two-hand-control module, such as the Banner AT-FM-10K or a Banner Safety Controller, to meet all relevant safety requirements of the appropriate standards (for example, ISO13851).

# Models

| Model | Cable | Supply Voltage | Output Type | DUO-TOUCH® SG Compatibility |
|---|---|---|---|---|
| **STBVP6** | 4-wire 2 m (6.5 ft) integral cable | 10 V DC to 30 V DC | Complementary PNP | AT-FM-10K Two-Hand Control Module, XS/SC26 Safety Controllers, and SC10 Safety Controller |
| **STBVP6Q** | 4-pin Mini Quick Disconnect | | | |
| **STBVP6Q5** | 4-pin M12 Quick Disconnect | | | |
| **STBVR81** | 5-wire 2 m (6.5 ft) integral cable | 20 V AC/DC to 30 V AC/DC | Two Individual Complementary Relays | |
| **STBVR81Q** | 5-pin Mini Quick Disconnect | | | |
| **STBVR81Q6** | 5-Pin M12 Quick Disconnect | | | |

Models with a quick disconnect connector require a mating cable.

# Important - Read This Before Proceeding

**The user is responsible for satisfying all local, state, and national laws,** rules, codes, and regulations relating to the use of this product and its application. Banner Engineering Corp. has made every effort to provide complete application, installation, operation, and maintenance instructions. Please contact a Banner Applications Engineer with any questions regarding this product.

**The user is responsible** for making sure that all machine operators, maintenance personnel, electricians, and supervisors are thoroughly familiar with and understand all instructions regarding the installation, maintenance, and use of this product, and with the machinery it controls. The user and any personnel involved with the installation and use of this product must be thoroughly familiar with all applicable standards, some of which are listed within the specifications. Banner Engineering Corp. makes no claim regarding a specific recommendation of any organization, the accuracy or effectiveness of any information provided, or the appropriateness of the provided information for a specific application.


© Banner Engineering Corp. All rights reserved.
www.bannerengineering.com

### Applicable U.S. Standards
*Not inclusive*

ANSI B11 Standards for Machine Tools Safety

NFPA 79 Electrical Standard for Industrial Machinery

ANSI/RIA R15.06 Safety Requirements for Industrial Robots and Robot Systems

### Applicable International Standards
*Not inclusive*

ISO 13849-1 Safety of Machinery – Safety-Related Parts of Control Systems – Part 1: General Principles for Design

IEC 60947-5-2 Low Voltage Switchgear and controlgear, Control circuit devices and switching elements - Proximity switches

EN 60947-5-3 Control circuit devices and switching elements – Requirements for proximity devices with defined behavior under fault conditions (PDDB)

EN 61508: 1-7 Functional safety of electrical/electronic/programmable electronic safety-related systems

ISO 13851 Two-Hand Control Devices – Principles for Design and Selection

IEC 62061 Safety of Machinery – Functional Safety of Safety-Related Control Systems

## EU/UK Declaration of Conformity (DoC)
Banner Engineering Corp. herewith declares that these products are in conformity with the provisions of the listed directives and all essential health and safety requirements have been met. For the complete DoC, please go to www.bannerengineering.com.

| Product | Directive |
|---|---|
| STB Self-Checking Optical Touch Buttons | EU: Machinery Directive 2006/42/EC |
| | UKCA: UKCA_REGULATION |

Representative in EU: Spiros Lachandidis, Managing Director, **Banner Engineering BV** Park Lane | Culliganlaan 2F bus 3 | 1831 Diegem, BELGIUM

Representative in UK: Tony Coghlan, Managing Director, **Turck Banner LTD** Blenheim House | Blenheim Court | Wickford, Essex SS11 8YT | Great Britain

# Overview
STB Self-Checking Optical Touch Buttons are touch-activated photoelectric devices designed to replace capacitive touch switches and mechanical push buttons. Their outputs activate while a finger is in the “touch area” (yoke) of the switch, interrupting the button’s infrared sensing beam.

Banner STB Series buttons are ergonomically designed to eliminate the hand, wrist, and arm stresses associated with mechanical push buttons. They require absolutely no physical pressure to operate. LED indicators light when power is on and outputs are activated.

All models are immune to EMI, RFI, and ambient light interference. STBs have a black polyetherimide upper housing and yellow PBT base. The 30 mm threaded base on all models provides easy mounting and easy retrofitting into existing applications. Rugged yellow polypropylene (TP) field covers are installed on all models to prevent inadvertent switch actuation due to objects (such as loose clothing or debris) which might accidentally block the sensing beam. The polypropylene material is capable of absorbing high impact (even at low temperatures) and is highly resistant to abrasion and to damage by most chemicals.


© Banner Engineering Corp. All rights reserved.
www.bannerengineering.com

*STB Touch Button features*

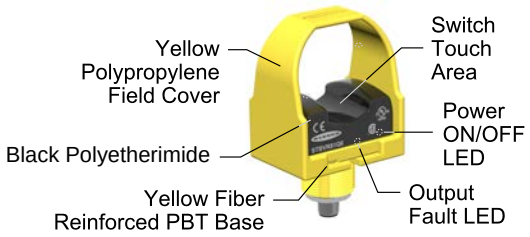


**WARNING:**

- **Use adequate point-of-operation guarding**
- Failure to properly guard hazardous machinery can result in a dangerous condition that could lead to serious injury or death.
- When properly installed, a two-hand control safety device provides protection only for the hands of the machine operator. It might be necessary to install additional safeguarding, such as safety light curtains, additional two-hand controls, and/or hard guards, to protect all individuals from hazardous machinery.

STB Self-Checking Optical Touch Buttons are very similar to the proven and popular OTB Series buttons. The dual-microcontroller internal design of the STB buttons, however, allows the hookup to a Banner DUO-TOUCH SG Two-Hand-Control Safety Module, Banner Safety Controller, or other two-hand-control designed to meet Type IIIC requirements per ISO 13851 (requiring 1 normally open and 1 normally closed contact per input channel). These microcontrollers perform a continuous self-check. The emitter is continuously pulsed, and receiver response is checked accordingly by the microcontrollers. STB Series Touch Buttons are designed to immediately detect any internal component failure, go into a lockout mode, and indicate the failure with a flashing green Fault LED.

The STB outputs are not monitored by the STB circuitry, and have no external device monitoring feedback. Output monitoring must be accomplished by using an external device, such as a Type IIIC Two-Hand-Control module.

STB Series Self-Checking Touch Buttons were designed primarily to provide the self-checking function required in control-reliable machine cycle initiation applications. STBs also are suitable for use anywhere mechanical push buttons or the original OTB Touch Buttons are used.

Both the solid-state and relay-output versions have complementary outputs and can be connected to switch power to equipment as long as the STB’s switching voltage and current limits are not exceeded.

STBs must be connected to a type IIIC Two-Hand-Control circuit module, in most cases, when used to initiate potentially dangerous machine cycles.

# Application Information

The polyetherimide upper housing will become brittle with prolonged exposure to outdoor sunlight. Window glass effectively filters longer wavelength ultraviolet light and provides excellent protection from sunlight.

Avoid contact with strong alkalis, hydrocarbons and fuels.

Clean periodically using mild soap solution and a soft cloth.


© Banner Engineering Corp. All rights reserved.
www.bannerengineering.com

Chapter Contents

System Power-Up ..... 6
Run Mode ..... 6
Fault ..... 6
LED Indicators ..... 6

# Chapter 2 Normal Operation

## System Power-Up

When power is applied, the STB conducts a self-test to detect critical internal faults and prepares for Run Mode operation.

If the STB detects a critical fault, the outputs remain Off and the Output Fault LED flashes.

If no faults are detected, the STB enters Run mode and looks for a finger in the switch touch area.

## Run Mode

If the infrared sensing beam is interrupted (a finger is detected), the Output Fault LED is on solid and the outputs turn On. When the beam is clear (the finger is removed), the Output Fault LED turns off and the outputs turn Off.

The STB continually runs internal checks for fault conditions. If a fault is detected, the outputs turn Off and the Output Fault LED flashes.

## Fault

When a fault is detected, the outputs turn Off and the Output Fault LED flashes.

A power cycle may be necessary to clear the fault condition.

## LED Indicators

| STB Series Touch Button LED Indicators | |
|---|---|
| Power On (green) | Solid when power is applied |
| Output, Fault (green) | Solid when button is activated |
| | Off when button is not activated |
| | Flashing when a fault condition is detected |


© Banner Engineering Corp. All rights reserved.
www.bannerengineering.com

Chapter Contents

Two-Hand Control Safety Distance (Minimum Distance) ..... 8
U.S. Applications ..... 8
European Applications ..... 8
Example Separation Distance Calculation ..... 9
Wiring Diagrams ..... 9

# Chapter 3 Installation

OSHA and ANSI require that the hand controls be mounted to protect them from accidental or unintentional operation. Protective field covers are installed to prevent accidental switch actuation and to discourage the use of forearms or elbows. European standard ISO 13851 includes a detailed discussion of approaches to protection of hand controls. The hand controls must be arranged far enough apart so that the operator cannot operate both hand controls by the use of one arm. Typically, this distance is not less than 550 mm (21.7 in) in a straight line, but using guards or alternate mounting arrangements can allow shorter distances, per ISO 13851. This standard also recommends that hand controls be arranged on a horizontal (or nearly horizontal) surface that is 1,100 mm (43.3 in) above the floor.

Consider ergonomic principles to avoid unnecessary fatigue in the installation of the hand controls. Install the touch buttons at a height and in a location that will be comfortable for the user. See ISO 13851 Two-Hand Control, ANSI B11.TR1—Ergonomic Guidelines, and EN894— Safety of Machinery—Ergonomic Requirements—Control Actuators for further information.

Banner Engineering also manufactures runbars with STB buttons installed. For more information, see p/n 131634.

*STB touch buttons mounted*



CAUTION:

- **Install hand controls to prevent accidental actuation**
- It is not possible to completely protect the two-hand control system from defeat.
- OSHA regulations require the user to arrange and protect hand controls to minimize possibility of defeat or accidental actuation.

CAUTION:

- **Avoid installing hand controls in contaminated environments**—Severe contamination or other environmental influences could cause a slow response or false on condition of mechanical or ergonomic buttons.
- A slow response or false on condition could result in exposure to a hazard.
- The environment in which hand controls are installed must not adversely affect the means of actuation.


© Banner Engineering Corp. All rights reserved.
www.bannerengineering.com

# Two-Hand Control Safety Distance (Minimum Distance)

Install all hand controls far enough away from the nearest hazard point that the operator cannot reach the hazard with a hand or other body part before the hazardous motion ceases. This is the separation distance (safety distance) and may be calculated as follows.

**WARNING:**

- **Mount hand controls at a safe distance from moving machine parts**
- Failure to establish and maintain the safety distance (minimum distance) could result in serious injury or death.
- Mount hand controls as determined by the applicable standard. The operator or other non-qualified persons must not be able to relocate the hand controls.

## U.S. Applications

The Safety Distance formula, as provided in ANSI B11.19-2019:

$$D = (K \times T) + d_{ds} + Z$$

**D**

The Safety Distance of a device in inches or mm.

**K**

The maximum speed that an individual can approach the hazard.

63 in/sec or 1600 mm/sec as recommended by OSHA 29CFR1910.217 and ANSI B11.19. Various studies indicate speeds of 1600 mm/sec (63 in/sec) to more than 2500 mm/sec (100 in/sec), however, the studies are not conclusive determinations. Consider all factors, including the physical ability of operators, when determining the value of K to be used.

**T**

The total time to achieve a safe condition (seconds).

The total time is the total of the following five components:

$T_d$ = the reaction time of each device
$T_i$ = the reaction time of the device interface(s)
$T_c$ = the reaction time of control system
$T_s$ = the reaction time of the machine
$T_{scm}$ = the time associated with stopping-performance monitoring (safe-condition monitoring system)

**$d_{ds}$**

The reaching distance associated with devices (inches or mm).

For two-hand control applications where encroachment towards the hazard is not restricted, $D_{ds}$ = 550 mm (21.65 in). When encroachment is obstructed (for example, shrouding the two-hand actuating controls, orientation of the workstation, etc.), the reaching distance may be reduced to zero.

**Z**

Supplemental distance factors (inches or mm). For example, measurement errors, reflection-based measurement errors, lack of ground clearance of moving equipment, or decreasing braking torque of moving equipment.

## European Applications

The Minimum Distance formula, as provided in EN ISO 13855:2024:

$$S = (K \times T) + D_{DS} + Z$$

**S**

The separation distance in mm (not less than 100 mm)


© Banner Engineering Corp. All rights reserved.
www.bannerengineering.com

**K**

The approach speed in mm/s (approach speeds of body or part of the body as stated in ISO 13855)

- 2000 mm/s for the speed of upper limbs
- 1600 mm/s for walking

**T**

The overall system response time in seconds

**$D_{DS}$**

Supplements the reaching distance associated with a protective device (mm)

Where encroachment toward the hazard is not prevented, $D_{DS}$ should be 550 mm. $D_{DS}$ may be reduced to 0 if the risk of encroachment is eliminated, but the safety distance must always be 100 m or greater.

**Z**

The application-dependent supplemental distance factor (mm), such as for measurement uncertainty, brake wear, reflection, etc.

# Example Separation Distance Calculation

The following example illustrates the use of the formula to calculate the separation distance for a part-revolution clutch machine using shrouded STBVP6 buttons. This example uses 0.50 seconds as a typical value for $T_s$ and 0.035 seconds for $T_c$ and 0.010 seconds for $T_d$.

$D = (K \times T) + d_{ds} + Z$

$T = T_d + T_i + T_c + T_s + T_{scm}$

$T_d$ = 0.010 seconds
$T_i$ = 0
$T_c$ = 0.035 seconds
$T_s$ = 0.50 seconds (measured by a stop-time measuring device)

T = 0.010 + 0 + 0.035 + 0.50 = 0.545 seconds

D = (63 x 0.545) + 0 + 0

D = 34.4 in

In this example, both hand controls must be located no closer than 34.4 inches from the nearest hazard point.

# Wiring Diagrams

Cabled models only are shown. Quick-disconnect wiring is functionally identical. Connection of DC power is without regard to polarity.

**Electromechanical Relay Output Models**

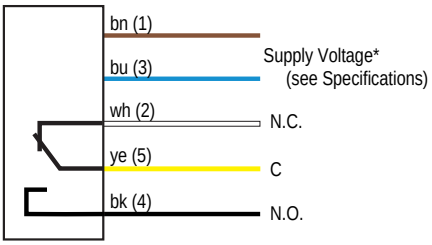


**PNP (Sourcing) Solid-State Output Models**

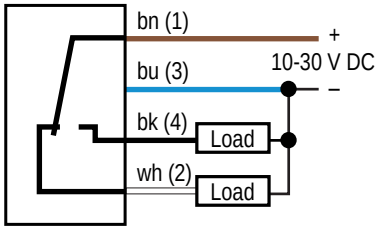


**Wiring Key**

1 = Brown
2 = White
3 = Blue
4 = Black
5 = Gray or Yellow

* NOTE: Connection of DC power is without regard to polarity.


© Banner Engineering Corp. All rights reserved.
www.bannerengineering.com

*Generic interface of a relay-output STB Touch Button to a type IIIC two-hand-control module*

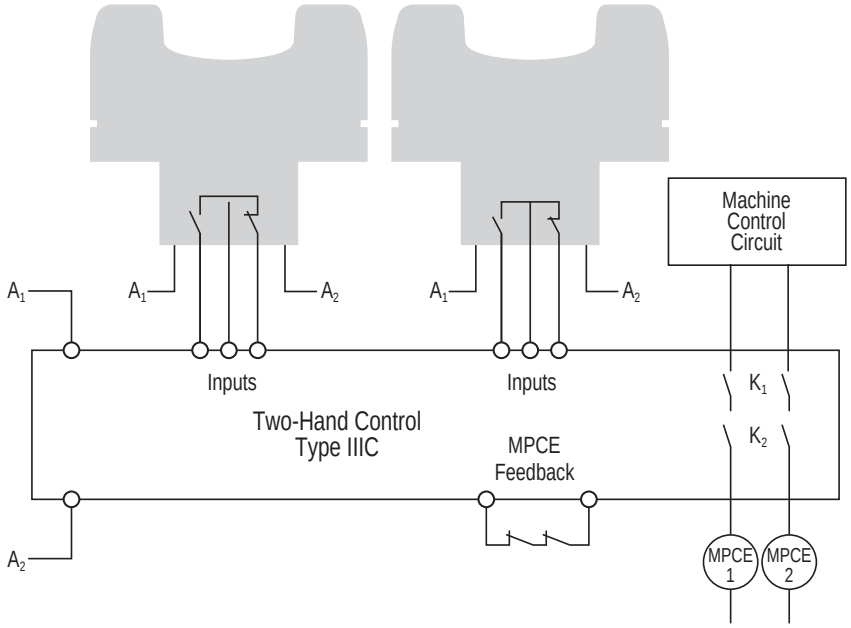


**Wiring Key**

1 = Two-Hand Control Type IIIC Module
2 = Inputs
3 = MPCE feedback
4 = Machine control circuit

**WARNING:**
Safety Systems Used for Two-Hand-Control. In a two-hand-control/trip system that incorporates STB Touch Buttons as the actuation devices and functions as a safeguard, the anti-tiedown and simultaneity monitoring functions should not be performed by a non-safety-related device (for example, a PLC or PC). Per OSHA 29CFR1910.211(d)(62), the “safety system must...operate together as a unit, such that a single failure or single operating error will not cause injury to personnel due to point-of-operation hazards.”

Refer to the appropriate standard to determine the requirements of a two hand-control/trip system when used for safeguarding.

*STB Touch Button block diagrams*

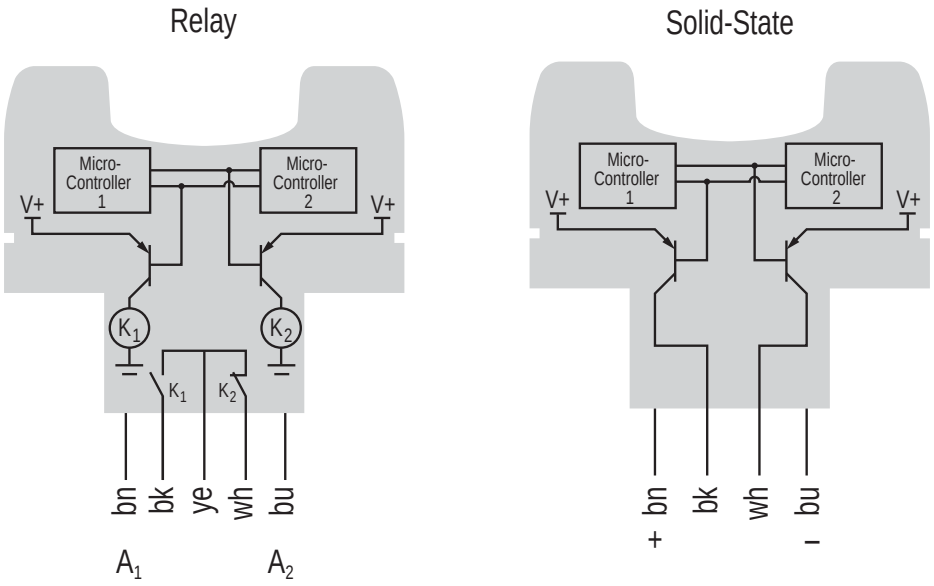



© Banner Engineering Corp. All rights reserved.
www.bannerengineering.com

Chapter Contents

Safety Specifications ..... 11
Dimensions ..... 13

# Chapter 4 Specifications

**Supply Voltage and Current**

**STBVP6 models:** 10 V DC to 30 V DC at 75 mA, typical

**STBVR81 models:** 20 V DC to 30 V DC, or 20 V AC to 30 V AC pk-to-pk (14 V AC to 21 V AC RMS)

Installations using a DC power supply must use a SELV-rated supply according to EN IEC 60950.

Installations using an AC supply must use an NEC Class 2-rated transformer.

**Supply Protection Circuitry**

Protected against reverse polarity and transient voltages

**Output Configuration**

**STBVP6 models:** Complementary PNP (sourcing) open-collector transistors

**STBVR81 models:** Complementary electromechanical relays

**Output Rating**

**STBVP6 models (solid-state outputs):**

Max. load: 150 mA
On-state max. output voltage (no load): +V(supply) − 1.5 V
Off-state leakage current: < 1 µA

**STBVR81 models (electromechanical relays):**

Max. switching voltage: 125 V DC/150 V AC
Max. switching current: 1 A at 24 V DC; 0.4 A at 125 V AC (resistive loads)
Max. resistive power: 24 W DC/50 VA AC

Mechanical life of relays: minimum $1\times10^8$ operations

Electrical life of relays: $1.5 \times 10^5$ cycles at 1 amp, 24 V resistive

**Output Protection Circuitry**

All models protected against false pulse on power-up. Models with solid-state outputs have overload protection.

**Output Switching Times**

| | Actuate (Clear to Blocked) | De-Actuate[1] (Blocked to Clear) |
|---|---|---|
| **STBVP6** | 21 ms | 10 ms |
| **STBVR81** | 35 ms | 25 ms |

[1] The De-Actuate (Blocked to Clear) values should be used for variable $T_h$ in the Safety Distance calculations.

**Connections**

PVC-jacketed 2 m (6.5 ft) cables or quick disconnect fitting, depending on model; integral 9 m (30 ft) cables are also available. Accessory cables required for quick disconnect models.

STBVP6 models: 4-wire (4-pin Mini or M12 quick disconnect)

STBVR81 models: 5-wire (5-pin Mini or M12 quick disconnect)

**Environmental Rating**

Meets NEMA 1, 3, 4, 4X, 12 and 13; IP66

**Construction**

Totally encapsulated, non-metallic enclosure. Black polyetherimide upper housing; fiber-reinforced PBT polyester base. Electronics fully epoxy encapsulated. Pre-installed polypropylene (TP) protective field cover.

**Ambient Light Immunity**

Up to 100,000 lux

**Operating Conditions**

0 °C to +50 °C (+32 °F to +122 °F)

90% at +50 °C maximum relative humidity (non-condensing)

**Two-Hand Control System Note**

When STBVP6 buttons are used with Two-Hand Control Modules or Safety Controllers (for example, XS/SC26-2, SC10-2) in a IIIC two-hand control system, the power supply to the STBVP6 buttons must be of the same voltage that is used to power the Two-Hand Control Module/Safety Controller and they must have a common supply return (that is, 0 V or ground).

**Certifications**

Banner Engineering BV
Park Lane, Culliganlaan 2F bus 3
1831 Diegem, BELGIUM

Turck Banner LTD Blenheim House
Blenheim Court
Wickford, Essex SS11 8YT
GREAT BRITAIN

## Safety Specifications

The STB Self-Checking Optical Touch Button is an IEC 61508 Type B device with a Systematic Capability of 3.

The STB meet the requirements of Cat. 4/PL e acc. to EN ISO 13849-1 and SIL 3 acc. to IEC 62061/IEC 61508 when interfaced with a IIIC Two-Hand Control Module (for example, AT-FM-10K) or an appropriate Safety Controller (for example, XS/SC26, SC10-2) configured as a IIIC Two-Hand Control system in order to be used in safety applications.

The STB Self-Checking Optical Touch Button is HFT = 1. When two devices are used in a Two-Hand Control system, then HFT = 2 is fulfilled.


© Banner Engineering Corp. All rights reserved.
www.bannerengineering.com

*Failure Rate Data (failures per hour)*

| Model Number | $\lambda_S$ | $\lambda_{DD}$ | $\lambda_{DU}$ |
|---|---|---|---|
| STBVP6 | 2.02E-07 | 1.85E-07 | 1.74E-08 |
| STBVR81 | 1.981E-07 | 1.805E-07 | 1.764E-08 |

*Calculated Probability of Failure on Demand*

| Model Number | Proof Test Interval | | PFH | PFD |
|---|---|---|---|---|
| | Years | Hours | | |
| STBVP6 | 0.25 | 2,190 | 1.06E-09 | 1.16E-06 |
| | 0.5 | 4,380 | 1.06E-09 | 2.31E-06 |
| | 1 | 8,760 | 1.06E-09 | 4.63E-06 |
| | 2 | 17,520 | 1.06E-09 | 9.27E-06 |
| | 5 | 43,800 | 1.07E-09 | 2.33E-05 |
| | 10 | 87,600 | 1.08E-09 | 4.69E-05 |
| | 20 | 175,200 | 1.10E-09 | 9.53E-05 |
| STBVR81 | 0.25 | 2,190 | 1.07E-09 | 1.17E-06 |
| | 0.5 | 4,380 | 1.07E-09 | 2.34E-06 |
| | 1 | 8,760 | 1.07E-09 | 4.68E-06 |
| | 2 | 17,520 | 1.07E-09 | 9.38E-06 |
| | 5 | 43,800 | 1.08E-09 | 2.36E-05 |
| | 10 | 87,600 | 1.09E-09 | 4.75E-05 |
| | 20 | 175,200 | 1.12E-09 | 9.65E-05 |

Mission time is 20 years.


© Banner Engineering Corp. All rights reserved.
www.bannerengineering.com

# Dimensions

All measurements are listed in millimeters [inches], unless noted otherwise. The measurements provided are subject to change.

*M12 Models*

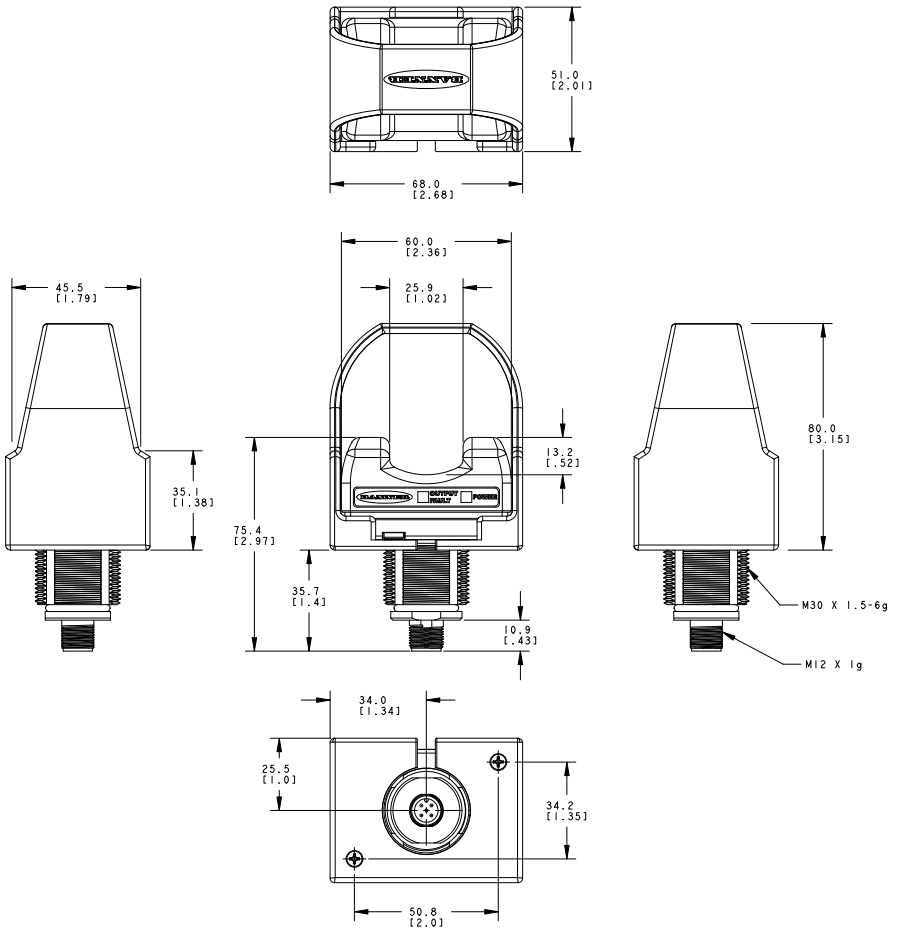



© Banner Engineering Corp. All rights reserved.
www.bannerengineering.com

*Mini Models*

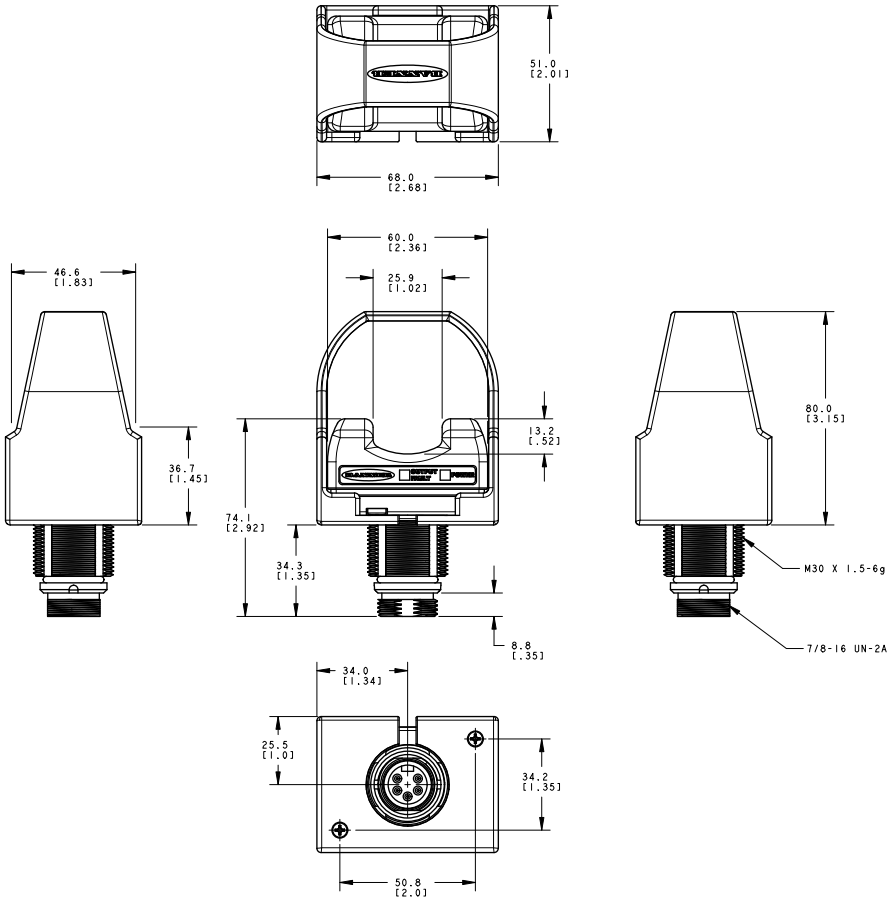



© Banner Engineering Corp. All rights reserved.
www.bannerengineering.com

Chapter Contents

Safety Controllers ..... 15
AT-FM-10K ..... 15
Cordsets ..... 15
Mounting Brackets ..... 16
Replacement Field Covers ..... 18

# Chapter 5 Accessories

The STB Series Touch Buttons are actuation devices. To perform their safety function, these devices need to be connected to an appropriate safety monitoring device like an AT-FM-10K module or Banner Safety Controller.

## Safety Controllers

*Safety controller models*

| Non-Expandable Models | Expandable Models | Description |
|---|---|---|
| **SC26-2** | **XS26-2** | 26 convertible I/O and 2 redundant solid-state safety outputs |
| **SC26-2d** | **XS26-2d** | 26 convertible I/O and 2 redundant solid-state safety outputs with display |
| **SC26-2e** | **XS26-2e** | 26 convertible I/O and 2 redundant solid-state safety outputs with Ethernet |
| **SC26-2de** | **XS26-2de** | 26 convertible I/O and 2 redundant solid-state safety outputs with display and Ethernet |
| **SC10-2roe** | | 10 inputs, 2 redundant relay safety outputs (3 contacts each) (ISD and Ethernet compatible) |
| | **XS26-ISDd** | 26 inputs, 2 redundant solid-state safety outputs with display, Ethernet, and 8 ISD channels |

## AT-FM-10K

| Model | Description |
|---|---|
| **AT-FM-10K** | Monitors two actuation devices, 2 normally open (N.O.) redundant-output 6 amp contacts |

## Cordsets

| 4-Pin Single-Ended Mini Female Cordsets | | | | |
|---|---|---|---|---|
| **Model** | **Length** | **Style** | **Dimensions** | **Pinout (Female)** |
| **MBCC-406** | 1.83 m (6 ft) | Straight | 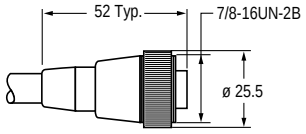 |  1 = Brown<br>2 = White<br>3 = Blue<br>4 = Black |
| **MBCC-412** | 3.66 m (12 ft) | | | |
| **MBCC-430** | 9.14 m (30 ft) | | | |


© Banner Engineering Corp. All rights reserved.
www.bannerengineering.com

| 5-Pin Single-Ended Mini Female Cordsets | | | | |
|---|---|---|---|---|
| **Model** | **Length** | **Style** | **Dimensions** | **Pinout (Female)** |
| **MBCC-506** | 1.83 m (6 ft) | Straight | 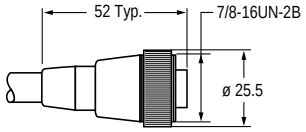 | 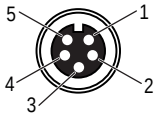<br>1 = Black<br>2 = Blue<br>3 = Yellow<br>4 = Brown<br>5 = White |
| **MBCC-512** | 3.66 m (12 ft) | | | |
| **MBCC-530** | 9.14 m (30 ft) | | | |

| 4-pin Single-Ended M12 Female Cordsets (datasheet p/n 235937) | | | | |
|---|---|---|---|---|
| **Model** | **Length** | **Dimensions (mm)** | **Pinout (Female)** | |
| **BC-M12F4-22-1** | 1 m (3.28 ft) | 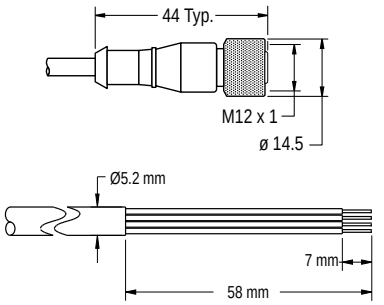 | 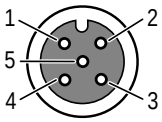 | 1 = Brown<br>2 = White<br>3 = Blue<br>4 = Black<br>5 = Unused<br>c UL us LISTED |
| **BC-M12F4-22-2** | 2 m (6.56 ft) | | | |
| **BC-M12F4-22-5** | 5 m (16.4 ft) | | | |
| **BC-M12F4-22-8** | 8 m (26.25 ft) | | | |
| **BC-M12F4-22-10** | 10 m (30.81 ft) | | | |
| **BC-M12F4-22-15** | 15 m (49.2 ft) | | | |
| **BC-M12F4-22-20** | 20 m (65.61 ft) | | | |
| **BC-M12F4-22-25** | 25 m (82.02 ft) | | | |
| **BC-M12F4-22-30** | 30 m (98.42 ft) | | | |

| 5-pin A-Code Single-Ended M12 Female Cordsets (datasheet p/n 235936) | | | | |
|---|---|---|---|---|
| **Model** | **Length** | **Dimensions (mm)** | **Pinout (Female)** | |
| **BC-M12F5-22-1** | 1 m (3.28 ft) | 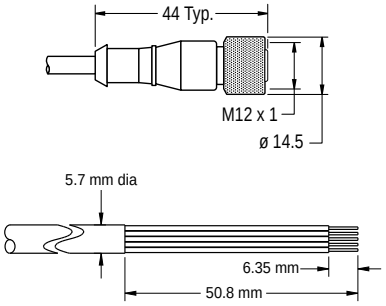 | 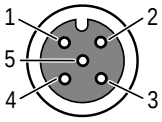 | 1 = Brown<br>2 = White<br>3 = Blue<br>4 = Black<br>5 = Gray<br>c UL us LISTED |
| **BC-M12F5-22-2** | 2 m (6.56 ft) | | | |
| **BC-M12F5-22-5** | 5 m (16.4 ft) | | | |
| **BC-M12F5-22-8** | 8 m (26.25 ft) | | | |
| **BC-M12F5-22-10** | 10 m (30.81 ft) | | | |
| **BC-M12F5-22-15** | 15 m (49.2 ft) | | | |

## Mounting Brackets

**SMB30MM**

- 12-gauge stainless steel bracket with curved mounting slots for versatile orientation
- Clearance for M6 (¼ in) hardware
- Mounting hole for 30 mm sensor
- CAD Files: DXF, PDF, IGS, STP

**Hole center spacing:** A=51, A to B=25.4
**Hole size:** A=42.6 × 7, B=ø 6.4, C=ø 30.1

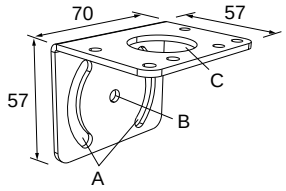



© Banner Engineering Corp. All rights reserved.
www.bannerengineering.com

**SMBAMS30P**

- Flat SMBAMS series bracket
- 30 mm hole for mounting sensors
- Articulation slots for 90°+ rotation
- 12-gauge 300 series stainless steel
- CAD Files: DXF, PDF, IGS, STP

**Hole center spacing:** A=26.0, A to B=13.0
**Hole size:** A=26.8 × 7.0, B=ø 6.5, C=ø 31.0

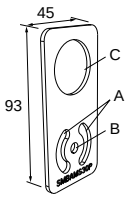


**SMB30A**

- Right-angle bracket with curved slot for versatile orientation
- Clearance for M6 (¼ in) hardware
- Mounting hole for 30 mm sensor
- 12-gauge stainless steel
- CAD Files: DXF, PDF, IGS, STP

**Hole center spacing:** A to B=40
**Hole size:** A=ø 6.3, B= 27.1 × 6.3, C=ø 30.5

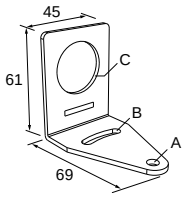


**SMB30SC**

- Swivel bracket with 30 mm mounting hole for sensor
- Black reinforced thermoplastic polyester
- Stainless steel mounting and swivel locking hardware included
- CAD Files: DXF, PDF, IGS, STP

**Hole center spacing:** A=ø 50.8
**Hole size:** A=ø 7.0, B=ø 30.0

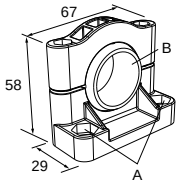


**SMBAMS30RA**

- Right-angle SMBAMS series bracket
- 30 mm hole for mounting sensors
- Articulation slots for 90°+ rotation
- 12-gauge (2.6 mm) cold-rolled steel
- CAD Files: DXF, PDF, IGS, STP

**Hole center spacing:** A=26.0, A to B=13.0
**Hole size:** A=26.8 × 7.0, B=ø 6.5, C=ø 31.0

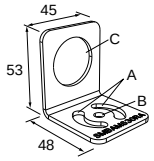


**SSA-MBK-EEC1**

- Single 30 mm hole
- 8 gauge steel, black finish (powder coat)
- Front surface for customer-applied labels
- CAD Files: DXF, PDF, IGS, STP

**Hole size:** A = ø 7 , B = ø 30

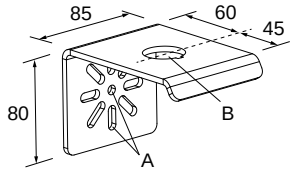


**SSA-MBK-EEC2**

- Two 30 mm holes
- 8 gauge steel, black finish (powder coat)
- Front surface for customer-applied labels
- CAD Files: DXF, PDF, IGS, STP

**Hole size:** A = ø 7 , B = ø 30

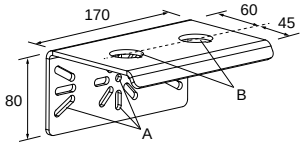



© Banner Engineering Corp. All rights reserved.
www.bannerengineering.com

| | |
|---|---|
| **SSA-MBK-EEC3**<br>• Three 30 mm holes<br>• 8 gauge steel, black finish (powder coat)<br>• Front surface for customer-applied labels<br>• CAD Files: DXF, PDF, IGS, STP<br>**Hole size:** A = ø 7 , B = ø 30 | 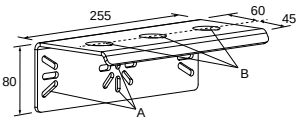 |
| **SSA-MBK-EEC1-SS**<br>• Single 30 mm hole<br>• 8 gauge 316 stainless steel<br>• Front surface for customer-applied labels<br>• CAD Files: DXF, PDF, IGS, STP<br>**Hole size:** A = ø 7 , B = ø 30 | 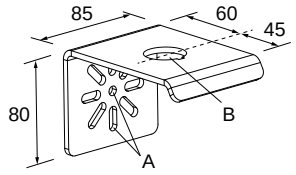 |

The SSA-MBK-EECx brackets offer:

- Horizontal and vertical (post) mounting
- Interchangeable positions of mounted devices (e.g. OTB/STB/VTB, E-Stop, K50s)

# Replacement Field Covers

Field covers are designed to prevent inadvertent activation of optical touch buttons by objects that accidentally block the sensing beam. Field covers are constructed of rugged polypropylene and are highly resistant to abrasion and to damage by most chemicals.

Additional colors are available. Contact Banner Engineering for options.

| Model | Description | |
|---|---|---|
| OTC-1-YW | Standard Yellow Field Cover | 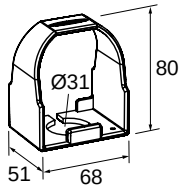 |
| OTCL-1-YW | Large Yellow Field Cover | 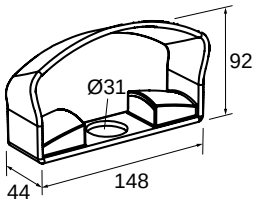 |


© Banner Engineering Corp. All rights reserved.
www.bannerengineering.com

Chapter Contents

Repairs and Translations ..... 19
Contact Us ..... 19
Banner Engineering Corp Limited Warranty ..... 19

# Chapter 6 Product Support

## Repairs and Translations

Contact Banner Engineering for troubleshooting of this device. **Do not attempt any repairs to this Banner device; it contains no field-replaceable parts or components.** If the device, device part, or device component is determined to be defective by a Banner Applications Engineer, they will advise you of Banner's RMA (Return Merchandise Authorization) procedure.

> **IMPORTANT:** If instructed to return the device, pack it with care. Damage that occurs in return shipping is not covered by warranty.

Obtain assistance with product repairs by contacting your local Banner Engineering Corp distributor or by calling Banner directly at (763) 544-3164. Access literature translated into your native language on the Banner website at www.bannerengineering.com or contact Banner directly at (763) 544-3164.

Para reparaciones de productos, por favor contacte a su distribuidor local de Banner Engineering o llame a Banner directamente al 00 1 (763) 544-3164. Vea la literatura traducida en su idioma en el sitio web Banner en www.bannerengineering.com o comuníquese con Banner directamente al 00 1 (763) 544-3164.

Pour vous aider lors de la réparation de produits, contactez votre distributeur Banner local our appelez directement Banner au (763) 544-3164. La documentation traduite dans votre langue est disponible sur le site internet de Banner www.bannerengineering.com ou contactez directement Banner au (763) 544-3164.

请联系当地的 Banner Engineering Corp 经销商或直接致电 Banner +1 (763) 544-3164，以获得产品维修帮助。请访问邦纳网站 www.bannerengineering.com 或直接拨打 +1 (763) 544-3164 联系邦纳，获取翻译成您母语的资料。

제품 수리에 대한 지원은 지역 Banner Engineering Corp 대리점에 문의하거나 Banner에 직접 (763) 544-3164로 문의하실 수 있습니다. 사용자의 모국어로 번역된 자료는 Banner 웹사이트 www.bannerengineering.com에서 액세스하거나 Banner에 직접 (763) 544-3164로 문의하실 수 있습니다.

## Contact Us

Banner Engineering Corp. | 9714 Tenth Avenue North | Plymouth, MN 55441, USA | Phone: + 1 888 373 6767

For worldwide locations and local representatives, visit www.bannerengineering.com.

## Banner Engineering Corp Limited Warranty

Banner Engineering Corp. warrants its products to be free from defects in material and workmanship for one year following the date of shipment. Banner Engineering Corp. will repair or replace, free of charge, any product of its manufacture which, at the time it is returned to the factory, is found to have been defective during the warranty period. This warranty does not cover damage or liability for misuse, abuse, or the improper application or installation of the Banner product.

**THIS LIMITED WARRANTY IS EXCLUSIVE AND IN LIEU OF ALL OTHER WARRANTIES WHETHER EXPRESS OR IMPLIED (INCLUDING, WITHOUT LIMITATION, ANY WARRANTY OF MERCHANTABILITY OR FITNESS FOR A PARTICULAR PURPOSE), AND WHETHER ARISING UNDER COURSE OF PERFORMANCE, COURSE OF DEALING OR TRADE USAGE.**

This Warranty is exclusive and limited to repair or, at the discretion of Banner Engineering Corp., replacement. **IN NO EVENT SHALL BANNER ENGINEERING CORP. BE LIABLE TO BUYER OR ANY OTHER PERSON OR ENTITY FOR ANY EXTRA COSTS, EXPENSES, LOSSES, LOSS OF PROFITS, OR ANY INCIDENTAL, CONSEQUENTIAL OR SPECIAL DAMAGES RESULTING FROM ANY PRODUCT DEFECT OR FROM THE USE OR INABILITY TO USE THE PRODUCT, WHETHER ARISING IN CONTRACT OR WARRANTY, STATUTE, TORT, STRICT LIABILITY, NEGLIGENCE, OR OTHERWISE.**

Banner Engineering Corp. reserves the right to change, modify or improve the design of the product without assuming any obligations or liabilities relating to any product previously manufactured by Banner Engineering Corp. Any misuse, abuse, or improper application or installation of this product or use of the product for personal protection applications when the product is identified as not intended for such purposes will void the product warranty. Any modifications to this product without prior express approval by Banner Engineering Corp will void the product warranties. All specifications published in this document are subject to change; Banner reserves the right to modify product specifications or update documentation at any time. Specifications and product information in English supersede that which is provided in any other language. For the most recent version of any documentation, refer to: www.bannerengineering.com.


© Banner Engineering Corp. All rights reserved.
www.bannerengineering.com

For patent information, see www.bannerengineering.com/patents.


© Banner Engineering Corp. All rights reserved.

LinkedIn

X

Facebook

Instagram



© 2026. All rights reserved.
www.bannerengineering.com