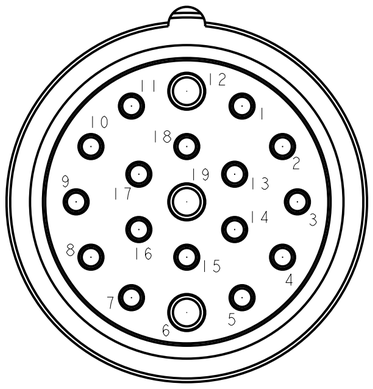

VIEW FROM FRONT (MALE)
SCALE 4:1

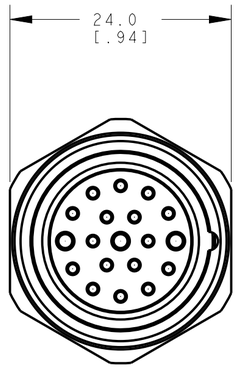

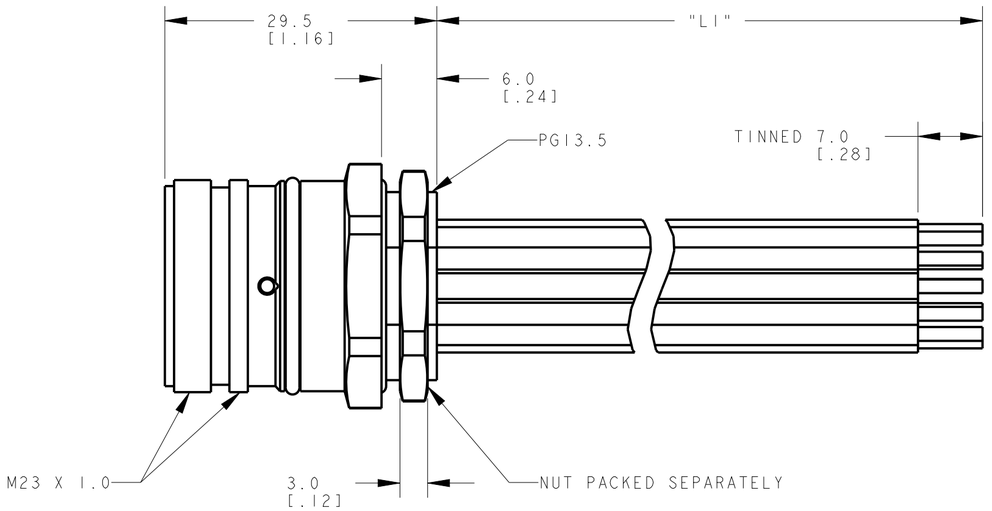

CONNECTOR PIN-OUT			
PIN	WIRE COLOR	PIN	WIRE COLOR
1	PURPLE	11	BLACK
2	RED	12	GREEN/YELLOW(18AWG)
3	GREY	13	YELLOW/BROWN
4	RED/BLUE	14	BROWN/GREEN
5	GREEN	15	WHITE
6	BLUE(18AWG)	16	YELLOW
7	GREY/PINK	17	PINK
8	WHITE/GREEN	18	GREY/BROWN
9	WHITE/YELLOW	19	BROWN(18AWG)
10	WHITE/GREY		

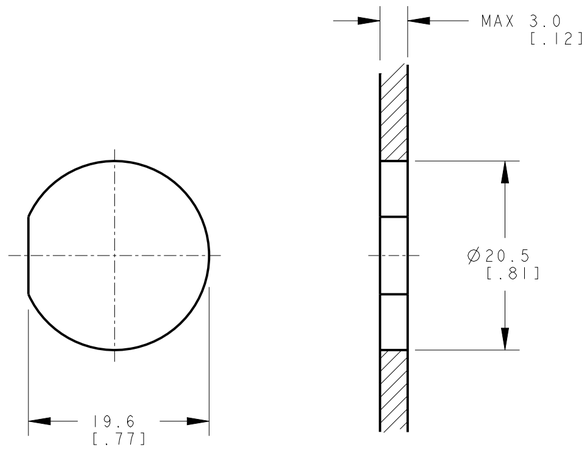

RECOMMENDED PANEL CUT-OUT

NOTES:
1. ALL DIMENSIONS ARE MILLIMETERS [INCHES] UNLESS OTHERWISE NOTED.
2. REFER TO "www.bannerengineering.com" FOR ADDITIONAL DATA AND SPECIFICATIONS.

This drawing is the property of BANNER ENGINEERING CORP. Any use or reproduction, in any form, without prior written permission of Banner is prohibited.
© 2015 Banner Engineering Corp.

THIRD ANGLE PROJECTION

BANNER ENGINEERING CORP.
www.bannerengineering.com

TITLE
BR-M23M19F13-X

SIZE	DRAWING NO.	REV.
C	244420	A
SCALE 2:1	SHEET 1 OF 1	

CREO

ПРОМЭЛЕКТРОНИКА/ sales@prom-elec.com