SLC4 Safety Light Curtain

Instruction Manual

Original Instructions
204371 Rev. E
1 August 2022
© Banner Engineering Corp. All rights reserved

204371

ПРОМЭЛЕКТРОНИКА/ sales@prom-elec.com

Contents

1 About This Document 4
1.1 Important... Read This Before Proceeding! 4
1.2 Use of Warnings and Cautions 4
1.3 EU Declaration of Conformity (DoC) 4
2 Standards and Regulations 5
2.1 Applicable U.S. Standards 5
2.2 OSHA Regulations 5
2.3 International/European Standards 5
3 Introduction 7
3.1 Features 7
3.2 System Description 7
3.2.1 Components 7
3.2.2 How to Order 8
3.2.3 Standard Emitter and Receiver Models—14 mm Resolution 8
3.2.4 Standard Emitter and Receiver Models—24 mm Resolution 9
3.3 Appropriate Applications and Limitations 9
3.3.1 Appropriate Applications 9
3.3.2 Examples: Inappropriate Applications 10
3.4 Control Reliability: Redundancy and Self-Checking 10
3.5 Operating Features 10
4 Mechanical Installation 12
4.1 Mechanical Installation Considerations 12
4.2 Calculating the Safety Distance (Minimum Distance) 12
4.2.1 Formula and Examples 13
4.2.2 Examples 14
4.3 Reducing or Eliminating Pass-Through Hazards 14
4.4 Supplemental Safeguarding 15
4.5 Other Considerations 16
4.5.1 Adjacent Reflective Surfaces 16
4.5.2 Use of Corner Mirrors 17
4.5.3 Emitter and Receiver Orientation 18
4.5.4 Installing Multiple Systems 19
4.6 Mounting System Components 20
4.6.1 Mounting Hardware 20
4.6.2 Mounting the End Brackets 20
4.6.3 Mounting the Optional SLC4A-MBK-10 Brackets 21
4.6.4 Mounting the Side Brackets 22
4.6.5 Sensor Mounting and Mechanical Alignment Verification 22
4.6.6 Mounting Dimensions and Defined Area 24
5 Electrical Installation and Testing 25
5.1 Routing Cordsets 25
5.2 Initial Electrical Connections 26
5.3 Initial Checkout Procedure 26
5.3.1 Configuring the System for Initial Checkout 26
5.3.2 Apply Initial Power to the Machine 26
5.3.3 Optically Align the System Components 27
5.3.4 Optical Alignment Procedure with Mirrors 28
5.3.5 Conduct a Trip Test 28
5.4 Electrical Connections to the Guarded Machine 30
5.4.1 Protective Stop (Safety Stop) Circuits 30
5.4.2 Preparing for System Operation 31
5.4.3 Sensor Interchangeability 32
5.4.4 Commissioning Checkout 32
5.5 Wiring Diagrams 33
5.5.1 Generic Emitter Wiring Diagram 33
5.5.2 Generic Receiver Wiring Diagram—Self-checking Safety Module, Safety Controller, Safety PLC 35
6 System Operation 36
6.1 Security Protocol 36
6.2 Normal Operation 36
6.2.1 System Power-Up 36
6.2.2 Run Mode 36
6.2.3 Emitter Indicators 36
6.2.4 Receiver Indicators 36

6.3 Periodic Checkout Requirements 37
7 Troubleshooting 38
7.1 Lockout Conditions 38
7.2 Receiver Error Codes 38
7.3 Electrical and Optical Noise 38
7.3.1 Checking for Sources of Electrical Noise 38
7.3.2 Check for Sources of Optical Noise 39
8 Product Support and Maintenance 40
8.1 Cleaning 40
8.2 Replacement Parts 40
8.3 Warranty Service 40
8.4 Manufacturing Date 40
8.5 Disposal 40
8.6 Banner Engineering Corp Limited Warranty 40
8.7 Contact Us 41
9 Checkout Procedures 42
9.1 Schedule of Checkouts 42
10 Specifications 43
10.1 General Specifications 43
10.2 Emitter Specifications 43
10.3 Receiver Specifications 43
11 Accessories 44
11.1 Cordsets 44
11.2 Safety Controllers 45
11.3 Universal (Input) Safety Modules 45
11.4 Muting Module 45
11.5 Two-Color Indicators for the SLC4 46
11.6 In-Line Sensor Status Indicator 47
11.7 MSM Series Corner Mirrors 47
11.8 SSM Series Corner Mirrors 47
11.9 Mounting Brackets 48
11.10 Literature 48
12 Glossary 50

1 About This Document

1.1 Important... Read This Before Proceeding!

It is the responsibility of the machine designer, controls engineer, machine builder, machine operator, and/or maintenance personnel or electrician to apply and maintain this device in full compliance with all applicable regulations and standards. The device can provide the required safeguarding function only if it is properly installed, properly operated, and properly maintained. This manual attempts to provide complete installation, operation, and maintenance instruction. *Reading the manual in its entirety is highly recommended to ensure proper understanding of the operation, installation, and maintenance.* Please direct any questions regarding the application or use of the device to Banner Engineering.

For more information regarding U.S. and international institutions that provide safeguarding application and safeguarding device performance standards, see Standards and Regulations on page 5.

WARNING:

- The user is responsible for following these instructions.
- **Failure to follow any of these responsibilities may potentially create a dangerous condition that could result in serious injury or death.**
- Carefully read, understand, and comply with all instructions for this device.
- Perform a risk assessment that includes the specific machine guarding application. Guidance on a compliant methodology can be found in ISO 12100 or ANSI B11.0.
- Determine what safeguarding devices and methods are appropriate per the results of the risk assessment and implement per all applicable local, state, and national codes and regulations. See ISO 13849-1, ANSI B11.19, and/or other appropriate standards.
- Verify that the entire safeguarding system (including input devices, control systems, and output devices) is properly configured and installed, operational, and working as intended for the application.
- Periodically re-verify, as needed, that the entire safeguarding system is working as intended for the application.

1.2 Use of Warnings and Cautions

The precautions and statements used throughout this document are indicated by alert symbols and must be followed for the safe use of the SLC4 Safety Light Curtain. Failure to follow all precautions and alerts may result in unsafe use or operation. The following signal words and alert symbols are defined as follows:

Signal Word	Definition	Symbol
WARNING:	**Warnings** refer to potentially hazardous situations which, if not avoided, could result in serious injury or death.	
CAUTION:	**Cautions** refer to potentially hazardous situations which, if not avoided, could result in minor or moderate injury.	

These statements are intended to inform the machine designer and manufacturer, the end user, and maintenance personnel, how to avoid misapplication and effectively apply the SLC4 Safety Light Curtain to meet the various safeguarding application requirements. These individuals are responsible to read and abide by these statements.

1.3 EU Declaration of Conformity (DoC)

Banner Engineering Corp. herewith declares that these products are in conformity with the provisions of the listed directives and all essential health and safety requirements have been met. For the complete DoC, please go to www.bannerengineering.com.

Product	Directive
SLC4 Safety Light Curtain	2006/42/EC

Representative in EU: Peter Mertens, Managing Director, Banner Engineering BV. Address: Park Lane, Culliganlaan 2F, bus 3,1831 Diegem, Belgium.

2 Standards and Regulations

The list of standards below is included as a convenience for users of this Banner device. Inclusion of the standards below does not imply that the device complies specifically with any standard, other than those specified in the Specifications section of this manual.

2.1 Applicable U.S. Standards

ANSI B11.0 Safety of Machinery, General Requirements, and Risk Assessment
ANSI B11.1 Mechanical Power Presses
ANSI B11.2 Hydraulic Power Presses
ANSI B11.3 Power Press Brakes
ANSI B11.4 Shears
ANSI B11.5 Iron Workers
ANSI B11.6 Lathes
ANSI B11.7 Cold Headers and Cold Formers
ANSI B11.8 Drilling, Milling, and Boring
ANSI B11.9 Grinding Machines
ANSI B11.10 Metal Sawing Machines
ANSI B11.11 Gear Cutting Machines
ANSI B11.12 Roll Forming and Roll Bending Machines
ANSI B11.13 Single- and Multiple-Spindle Automatic Bar and Chucking Machines
ANSI B11.14 Coil Slitting Machines
ANSI B11.15 Pipe, Tube, and Shape Bending Machines
ANSI B11.16 Metal Powder Compacting Presses
ANSI B11.17 Horizontal Extrusion Presses
ANSI B11.18 Machinery and Machine Systems for the Processing of Coiled Strip, Sheet, and Plate
ANSI B11.19 Performance Criteria for Safeguarding
ANSI B11.20 Manufacturing Systems
ANSI B11.21 Machine Tools Using Lasers
ANSI B11.22 Numerically Controlled Turning Machines
ANSI B11.23 Machining Centers
ANSI B11.24 Transfer Machines
ANSI/RIA R15.06 Safety Requirements for Industrial Robots and Robot Systems
NFPA 79 Electrical Standard for Industrial Machinery
ANSI/PMMI B155.1 Package Machinery and Packaging-Related Converting Machinery — Safety Requirements

2.2 OSHA Regulations

OSHA Documents listed are part of: Code of Federal Regulations Title 29, Parts 1900 to 1910
OSHA 29 CFR 1910.212 General Requirements for (Guarding of) All Machines
OSHA 29 CFR 1910.147 The Control of Hazardous Energy (lockout/tagout)
OSHA 29 CFR 1910.217 (Guarding of) Mechanical Power Presses

2.3 International/European Standards

EN ISO 12100 Safety of Machinery – General Principles for Design — Risk Assessment and Risk Reduction
ISO 13857 Safety of Machinery – Safety Distances to Prevent Hazard Zones Being Reached
ISO 13850 (EN 418) Emergency Stop Devices, Functional Aspects – Principles for Design
ISO 13851 Two-Hand Control Devices – Principles for Design and Selection
IEC 62061 Functional Safety of Safety-Related Electrical, Electronic and Programmable Control Systems
EN ISO 13849-1 Safety-Related Parts of Control Systems

EN 13855 (EN 999) The Positioning of Protective Equipment in Respect to Approach Speeds of Parts of the Human Body
ISO 14119 (EN 1088) Interlocking Devices Associated with Guards – Principles for Design and Selection
EN 60204-1 Electrical Equipment of Machines Part 1: General Requirements
IEC 61496 Electro-sensitive Protection Equipment
IEC 60529 Degrees of Protection Provided by Enclosures
IEC 60947-1 Low Voltage Switchgear – General Rules
IEC 60947-5-1 Low Voltage Switchgear – Electromechanical Control Circuit Devices
IEC 60947-5-5 Low Voltage Switchgear – Electrical Emergency Stop Device with Mechanical Latching Function
IEC 61508 Functional Safety of Electrical/Electronic/Programmable Electronic Safety-Related Systems
IEC 62046 Safety of Machinery – Applications of Protective Equipment to Detect the Presence of Persons
ISO 3691-4 Industrial Trucks—Safety Requirements and Verification, Part 4 Driverless Industrial trucks and their Systems

3 Introduction

3.1 Features



- A two-piece optoelectronic safeguarding device
- Creates a screen of synchronized, modulated infrared sensing beams that extend from end-to-end of the sensors (no "dead zone")
- Low-profile compact package for smaller production machines
- 14 mm or 24 mm resolutions
- Defined areas of 160 mm (6.3 in), 240 mm (9.4 in), and 320 mm (12.6 in)
- 0.1 m to 2 m (4 in to 6.5 ft) sensing range
- Zone and Status indicators for diagnostics
- FMEA tested to ensure control reliability
- Highly immune to EMI, RFI, ambient light, weld flash, and strobe light
- Safety PLC input compatible (per OSSD specifications)

3.2 System Description

Note: This manual refers to an emitter and its receiver, and their cabling, as a system.

Banner SLC4 emitters and receivers provide a redundant, microprocessor-controlled, opposed-mode optoelectronic "curtain of light", or "safety light screen". SLC4 typically is used for point-of-operation safeguarding, and is suited to safeguard a variety of machinery.

The SLC4 emitters have a row of synchronized modulated infrared (invisible) light-emitting diodes (LEDs) in a compact housing. Receivers have a corresponding row of synchronized photodetectors. The light screen created by the emitter and receiver is called the defined area; its width and height are determined by the length of the sensor pair and the distance between them. The low-profile design provides maximum sensing in minimum space; its defined area (sensing area) is equivalent to the height of the sensors. The maximum sensing range is 2 m (6.5 ft), which decreases if corner mirrors are used. The sensing area extends from end to end of the housing; there is no “dead zone.”

In typical operation, if any part of an operator’s body (or any opaque object) of more than a pre-determined cross section is detected, the solid-state Output Signal Switching Device (OSSD) safety outputs turn OFF. These safety outputs are typically connected to an external monitoring device such as a Banner XS26-2 safety controller.

Electrical connections (power, ground, inputs, and outputs) are made via M12 (Euro-style) quick-disconnects.

All models require a supply voltage of +24 V dc ±15%.

Both the emitter and the receiver feature LEDs to provide continuous indication of operating status and error conditions.

SLC4 is extensively FMEA (Failure Mode and Effects Analysis) tested to establish an extremely high degree of confidence that, when appropriately installed, no system component will (even if it should fail) cause a failure to danger.

3.2.1 Components

An SLC4 “System” refers to a compatible emitter and receiver (equal length and resolution; available separately or in pairs), and cordset(s) for each. Mounting brackets are sold separately.

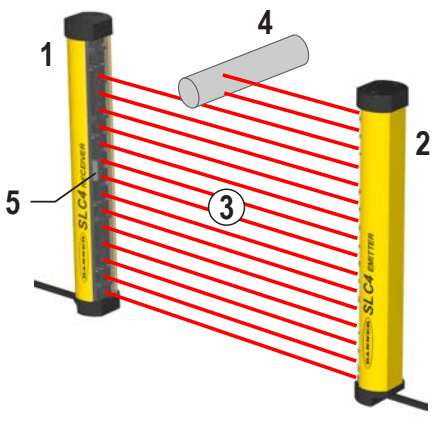

1. Receiver
2. Emitter
3. Defined area
4. Specified test piece
5. Status indicators are clearly visible on the sensor face

Models are listed with a factory installed 300 mm (1 ft) cable with 4-pin M12/Euro-style quick disconnect (QD) termination. The 4 mm (0.16 in) minimum bend radius for all cordset models accommodates low-clearance installations; cords can exit to left, right, or back of sensor, when mounting.

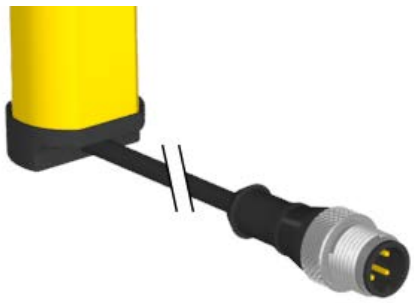

Euro QD termination (pigtail); requires mating QD cordset for machine connection



Cable pivots 180° as it exits the housing; bends to fit against perpendicular surfaces

3.2.2 How to Order

1. Choose a model and resolution (14 or 24 mm).
2. Choose an Emitter (E), a Receiver (R), or a Pair (P).
3. Choose one cordset for each sensor or two cordsets for a pair. See Accessories on page 44. The M12/Euro Pigtail QD models require a 4- or 5-pin M12/Euro QD cordsets, such as:
   - QDE cordset with flying leads
   - CSB series splitter cordset
4. Choose the mounting brackets. See Mounting Brackets on page 48.

3.2.3 Standard Emitter and Receiver Models—14 mm Resolution

14 mm Resolution Models				
Emitter	**Receiver**	**Pair**	**Defined Area**	**Response Time Tr (ms)**
SLC4E14-160P4	**SLC4R14-160P4**	**SLC4P14-160P44**	160 mm	8.0
SLC4E14-240P4	**SLC4R14-240P4**	**SLC4P14-240P44**	240 mm	10.0
SLC4E14-320P4	**SLC4R14-320P4**	**SLC4P14-320P44**	320 mm	11.5

3.2.4 Standard Emitter and Receiver Models—24 mm Resolution

24 mm Resolution Models				
Emitter	**Receiver**	**Pair**	**Defined Area**	**Response Time Tr (ms)**
SLC4E24-160P4	**SLC4R24-160P4**	**SLC4P24-160P44**	160 mm	6.5
SLC4E24-240P4	**SLC4R24-240P4**	**SLC4P24-240P44**	240 mm	7.5
SLC4E24-320P4	**SLC4R24-320P4**	**SLC4P24-320P44**	320 mm	8.0

3.3 Appropriate Applications and Limitations

WARNING:
- **Read this Section Carefully Before Installing the System**
- **Failure to follow these instructions could result in serious injury or death.**
- If all mounting, installation, interfacing, and checkout procedures are not followed properly, this Banner Engineering device cannot provide the protection for which it was designed.
- The user is responsible for ensuring that all local, state, and national laws, rules, codes, or regulations relating to the installation and use of this control system in any particular application are satisfied. Ensure that all legal requirements have been met and that all technical installation and maintenance instructions contained in this manual are followed.
- The user has the sole responsibility to ensure that this Banner Engineering device is installed and interfaced to the guarded machine by Qualified Persons, in accordance with this manual and applicable safety regulations. A Qualified person is a person who, by possession of a recognized degree or certificate of professional training, or who, by extensive knowledge, training and experience, has successfully demonstrated the ability to solve problems relating to the subject matter and work.

The Banner SLC4 is intended for point-of-operation machine guarding and other safeguarding applications. It is the user's responsibility to verify whether the safeguarding is appropriate for the application and is installed, as instructed by this manual, by a Qualified Person.

The SLC4 ability to perform its safeguarding function depends upon the appropriateness of the application and upon its proper mechanical and electrical installation and interfacing to the guarded machine. **If all mounting, installation, interfacing, and checkout procedures are not followed properly, the SLC4 cannot provide the protection for which it was designed**.

WARNING:
- **Install System Only on Appropriate Applications**
- Failure to follow these instructions could result in serious injury or death.
- Use Banner's SLC4 only on machinery that can be stopped immediately after a stop signal is issued at any point in the machine's stroke or cycle, such as part-revolution clutched machines. Under no circumstances may the SLC4 be used on full-revolution clutched machinery or in unsuitable applications.
- If there is any doubt about whether or not your machinery is compatible with the SLC4, contact Banner Engineering.

3.3.1 Appropriate Applications

SLC4 is typically used for, but is not limited to, the following applications:
- Small assembly equipment
- Automated production equipment
- Robotic work cells
- Molding presses
- Assembly and packaging machines
- Lean manufacturing systems

Figure 1. Typical Application

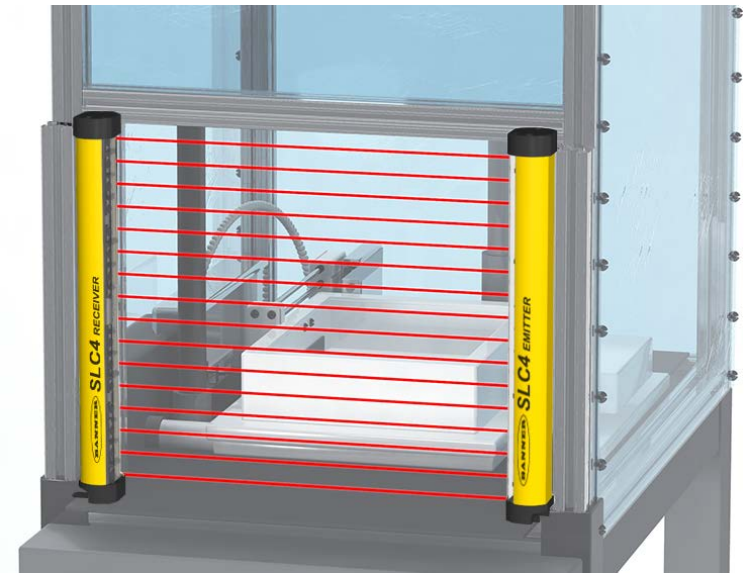

3.3.2 Examples: Inappropriate Applications

Do not use the SLC4 in the following applications:

- With any machine that cannot be stopped immediately after a stop signal is issued, such as single-stroke (or full-revolution) clutched machinery
- With any machine with inadequate or inconsistent machine response time and stopping performance
- With any machine that ejects materials or component parts through the defined area
- In any environment that is likely to adversely affect photoelectric sensing efficiency. For example, corrosive chemicals or fluids or unusually severe levels of smoke or dust, if not controlled, may degrade sensing efficiency
- As a tripping device to initiate or reinitiate machine motion (PSDI applications), unless the machine and its control system fully comply with the relevant standard or regulation (see OSHA 29CFR1910.217, NFPA 79, ANSI B11.19, ISO 12100, IEC 60204-1, IEC 61496-1, or other appropriate standard)

If the SLC4 is installed for use as a perimeter guard (where a pass-through hazard may exist, see Reducing or Eliminating Pass-Through Hazards on page 14), the dangerous machine motion can be initiated by normal means only after the safeguarded area is clear of individuals and the external safety monitoring device has been manually reset.

3.4 Control Reliability: Redundancy and Self-Checking

Redundancy requires that SLC4 circuit components be backed up to the extent that, if the failure of a single component will prevent effective machine stopping action when needed, that component must have a redundant counterpart which will perform the same function. The SLC4 is designed with redundant microprocessors.

Redundancy must be maintained whenever the SLC4 is in operation. Because a redundant system is no longer redundant after a component has failed, SLC4 is designed to monitor itself continuously. A component failure detected by or within the self-checking system causes a stop signal to be sent to the guarded machine and puts the SLC4 into a Lockout condition.

A recovery from this type of Lockout condition requires:

- Replacing the failed component (to restore redundancy), and
- Performing the appropriate reset procedure.

3.5 Operating Features

The sensing resolution is determined by the emitter and receiver model.

WARNING:
- **Use of automatic (trip) or manual (latch) start/restart**
- Failure to follow these instructions could result in a serious injury or death.
- Applying power to the Banner Engineering device, clearing the defined area, or resetting a latch condition must not initiate dangerous machine motion. Design the machine control circuitry so that one or more initiation devices must be engaged to start the machine (a conscious act), in addition to the Banner Engineering device going into Run mode.

Emitter Wiring Options— An SLC4 emitter can be connected either to its own power supply or to the receiver cable, color-for-color. The color-for-color wiring allows the emitter and receiver positions to be interchanged without rewiring.

Status Indicators—Status indicators on both the emitter and receiver are clearly visible on each sensor's front panel.

For more information, see System Operation on page 36.

Emitter:

Key	Description
1	Status Indicator (Red/Green)—Shows whether power is applied or the device is in a lockout condition.

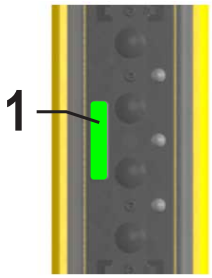

Receiver:

Key	Description
1	Status indicator (Red/Green)—shows System status: • Outputs are ON or OFF (green ON or red ON) • The System is in Lockout condition (flashing red)
2	Zone indicators (red/green)—each shows the status of approximately 1/3 of the total beams: • Aligned and clear (green ON) • Blocked and/or misaligned (red ON)
3	Zone 1 Indicator—indicates beam synchronization status

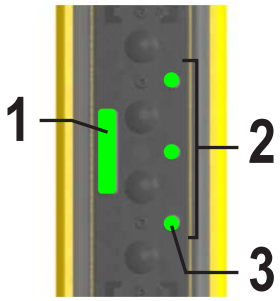

4 Mechanical Installation

The SLC4 system performance as a safety guarding device depends on:

- The suitability of the application
- The proper mechanical and electrical installation and interfacing to the guarded machine

WARNING:

- **Read this Section Carefully Before Installing the System**
- **Failure to follow these instructions could result in serious injury or death.**
- If all mounting, installation, interfacing, and checkout procedures are not followed properly, this Banner Engineering device cannot provide the protection for which it was designed.
- The user is responsible for ensuring that all local, state, and national laws, rules, codes, or regulations relating to the installation and use of this control system in any particular application are satisfied. Ensure that all legal requirements have been met and that all technical installation and maintenance instructions contained in this manual are followed.
- The user has the sole responsibility to ensure that this Banner Engineering device is installed and interfaced to the guarded machine by Qualified Persons, in accordance with this manual and applicable safety regulations. A Qualified person is a person who, by possession of a recognized degree or certificate of professional training, or who, by extensive knowledge, training and experience, has successfully demonstrated the ability to solve problems relating to the subject matter and work.

4.1 Mechanical Installation Considerations

The two primary factors that influence the layout of the SLC4 system mechanical installation are:

- Safety Distance (Minimum Distance) (see Calculating the Safety Distance (Minimum Distance) on page 12)
- Supplemental safeguarding/eliminating pass-through hazards (see Reducing or Eliminating Pass-Through Hazards on page 14)

Other considerations include:

- Emitter and Receiver Orientation (see Emitter and Receiver Orientation on page 18)
- Adjacent Reflective Surfaces (see Adjacent Reflective Surfaces on page 16)
- Use of Corner Mirrors (see Use of Corner Mirrors on page 17)
- Installation of Multiple Systems (see Installing Multiple Systems on page 19)

WARNING:

- **Position the System Components Carefully**
- Failure to observe this warning could result in serious injury or death.
- Position the system components such that the hazard cannot be accessed by reaching over, under, around, or through the sensing field. Additional and supplemental guarding may be required.

4.2 Calculating the Safety Distance (Minimum Distance)

Safety Distance (Ds), also called Minimum Distance (S), is the minimum distance required between the defined area and the closest reachable hazard point. The distance is calculated so that when an object or a person is detected (by blocking a sensing beam), the SLC4 sends a stop signal to the machine, causing it to stop by the time the object or person can reach any machine hazard point.

The distance is calculated differently for U.S. and European installations. Both methods take into account several factors, including a calculated human speed, the total system stopping time (which itself has several components), and the depth penetration factor. After the distance has been determined, record the calculated distance on the Daily Checkout Card.

WARNING:

- **Calculate the Safety Distance (Minimum Distance)**
- Failure to establish and maintain the safety distance (minimum distance) could result in serious injury or death.
- Mount the components at a distance from the nearest hazard such that an individual cannot reach the hazard before cessation of the hazardous motion or situation. Calculate this distance using the supplied formulas, as described by ANSI B11.19 and ISO 13855. Mount the components more than 100 mm (4 in) away from the hazard, regardless of the calculated value.

Figure 2. Safety distance (minimum distance) and hard (fixed) guarding

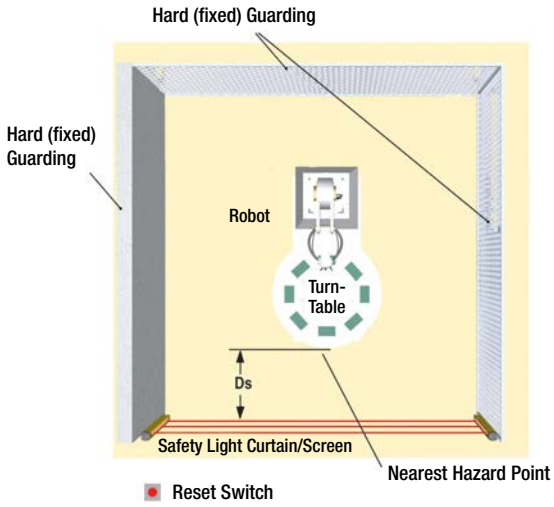

4.2.1 Formula and Examples

U.S. Applications	European Applications
The Safety (Separation) Distance formula for U.S. applications:	The Minimum Distance formula for European applications:
`Ds = K × (Ts + Tr) + Dpf`	`S = (K × T) + C`

Ds

the Safety Distance, in inches

K

1600 mm per second (or 63 in per second), the OSHA 29CFR1910.217, and ANSI B11.19 recommended hand-speed constant (see Note 1 below)

Ts

the overall stop time of the machine (in seconds) from the initial stop signal to the final ceasing of all motion, including stop times of all relevant control elements (for example, XS26-2 Safety Controllers) and measured at maximum machine velocity (see Note 3 below)

Tr

the maximum response time, in seconds, of the SLC4 emitter/receiver pair (depending on model)

Dpf

the added distance due to the depth penetration factor as prescribed in OSHA 29CFR1910.217, and ANSI B11.19 for U.S. applications. See Depth Penetration Factor (Dpf) table below or calculate using the formula (in mm): Dpf = 3.4 × (S – 7) where S is the resolution of the light curtain (for S ≤ 63 mm).

S

the Minimum Distance, in mm, from danger zone to light screen center line; minimum allowable distance is 100 mm (175 mm for non-industrial applications), regardless of calculated value

K

hand-speed constant (see Note 2 below); **2000 mm/s** (for Minimum Distances ≤ 500 mm) **1600 mm/s** (for Minimum Distances > 500 mm)

T

the overall machine stopping response time (in seconds), from the physical initiation of the safety device and the machine coming to a stop (or the hazard removed). This can be broken down into two parts: **Ts** and **Tr** where **T** = **Ts** + **Tr**

C

the additional distance, in mm, based on intrusion of a hand or object towards the danger zone prior to actuation of a safety device. Calculate using the formula (in mm):

```
C = 8 × (d – 14)
```

where `d` is the resolution of the light curtain (for `d` ≤ 40 mm), or use 850 mm for C.

U.S. Applications	European Applications

Table 1: Depth Penetration Factor (Dpf)

Depth Penetration Factor (Dpf)	
14 mm Systems	**24 mm Systems**
24 mm (0.94 in)	58 mm (2.3 in)

Notes:

1. The OSHA-recommended hand speed constant **K** has been determined by various studies and, although these studies indicate speeds of 1600 mm/sec. (63 in/sec.) to more than 2500 mm/sec. (100 in/sec.), they are not conclusive determinations. Consider all factors, including the physical ability of the operator, when determining the value of **K** to be used.
2. The recommended hand speed constant **K**, derived from data on approach speeds of the body or parts of the body as stated in ISO 13855.
3. **Ts** is usually measured by a stop-time measuring device. If the machine manufacturer's specified stop time is used, at least 20% should be added to allow for possible clutch/ brake system deterioration. This measurement must take into account the slower of the two MPCE channels, and the response time of all devices or controls that react to stop the machine.

WARNING:

- **Stop time (Ts) must include the response time of all devices or controls that react to stop the machine**
- If all devices are not included, the calculated safety distance (Ds or S) will be too short, which can lead to serious injury or death.
- Include the stop time of all relevant devices and controls in your calculations.
- If required, each of the two machine primary control elements (MPCE1 and MPCE2) must be capable of immediately stopping the dangerous machine motion, regardless of the state of the other. These two channels of machine control need not be identical, but the stop time performance of the machine (Ts, used to calculate the safety distance) must take into account the slower of the two channels.

4.2.2 Examples

Example: U.S. Applications, Model

K = 63 in. per second (the hand speed constant set by OSHA)

Ts = 0.31 (0.250 second is specified by the machine manufacturer; plus 20% safety factor; plus 13 ms for XS26-2 Safety Controller response time)

Tr = 0.008 seconds (the specified response time of an SLC4P14-160 System)

Dpf = 0.94 in (14 mm resolution)

Substitute the numbers into the formula as follows:

```
Ds = K × ( Ts + Tr ) + Dpf
```

Mount the SLC4 emitter and receiver so that no part of the defined area will be closer than 21 inches to the closest reachable hazard point on the guarded machine.

Example: European Applications, Model

K = 1600 mm per second

T = 0.32 (0.250 second specified by machine manufacturer; plus 20% safety factor; plus 13 ms XS26-2 Safety Controller response time), plus 0.008 seconds (the specified **SLC4P14-160** response time)

C = 8 × (14 – 14) = 0 mm (14 mm resolution)

Substitute the numbers into the formula as follows:

```
S = (K × T ) + C
```

Mount the SLC4 emitter and receiver so that no part of the defined area will be closer than 512 mm to the closest reachable hazard point on the guarded machine.

4.3 Reducing or Eliminating Pass-Through Hazards

A *pass-through* hazard is associated with applications where personnel may pass through a safeguard, such as the SLC4 Safety Light Curtain (which issues a stop command to remove the hazard), and then continues into the guarded area. This is common in access and perimeter guarding applications. Subsequently, their presence is no longer detected, and the related danger becomes the unexpected start or restart of the machine while personnel are within the guarded area.

In the use of light screens, a pass-through hazard typically results from large safety distances calculated from long stopping times, large minimum object sensitivities, reach-over, reach-through, or other installation considerations. A pass-through hazard can be generated with as little as 75 mm (3 in) between the sensing field and the machine frame or hard (fixed) guarding.

Eliminate or reduce pass-through hazards whenever possible. While it is recommended to eliminate the pass-through hazard altogether, this may not be possible due to machine layout, machine capabilities, or other application considerations.

One solution is to ensure that personnel are continually sensed while within the hazardous area. This can be accomplished by using supplemental safeguarding, such as described by the safety requirements in ANSI B11.19 or other appropriate standards.

An alternative method is to ensure that after the safeguarding device is tripped, the corresponding safety monitoring device latches and requires a deliberate manual action to reset. This method of safeguarding relies upon the location of the reset switch as well as safe work practices and procedures to prevent an unexpected start or restart of the guarded machine. The SLC4 Safety Light Curtain does not provide a configurable Manual Start/Restart (Latch Output) function. For these applications, this function must be implemented in the external safety monitoring device.

WARNING:

- **Use of the Banner device for Access or Perimeter Guarding**
- Failure to observe this warning could result in serious injury or death.
- If a Banner device is installed in an application that results in a pass-through hazard (for example, perimeter guarding), either the Banner device System or the Machine Primary Control Elements (MPCEs) of the guarded machine must cause a Latched response following an interruption of the defined area. The reset of this Latched condition may only be achieved by actuating a reset switch that is separate from the normal means of machine cycle initiation. Lockout/Tagout procedures per ANSI Z244.1 may be required, or additional safeguarding, as described by ANSI B11.19 safety requirements or other appropriate standards, must be used if a passthrough hazard can not be eliminated or reduced to an acceptable level of risk.

4.4 Supplemental Safeguarding

As described in Calculating the Safety Distance (Minimum Distance) on page 12, position the SLC4 such that an individual cannot reach through the defined area and access the hazard point before the machine has stopped.

Additionally, the hazard cannot be accessible by reaching around, under, or over the defined area. To accomplish this, supplemental guarding (mechanical barriers, such as screens or bars), as described by ANSI B11.19 safety requirements or other appropriate standards, must be installed. Access will then be possible only through the defined area of the SLC4 System or through other safeguarding that prevents access to the hazard.

The mechanical barriers used for this purpose are typically called "hard (fixed) guarding"; there must be no gaps between the hard (fixed) guarding and the defined area. Any openings in the hard (fixed) guarding must comply with the safe opening requirements of ANSI B11.19 or other appropriate standard.

Figure 3. An example of supplemental safeguarding

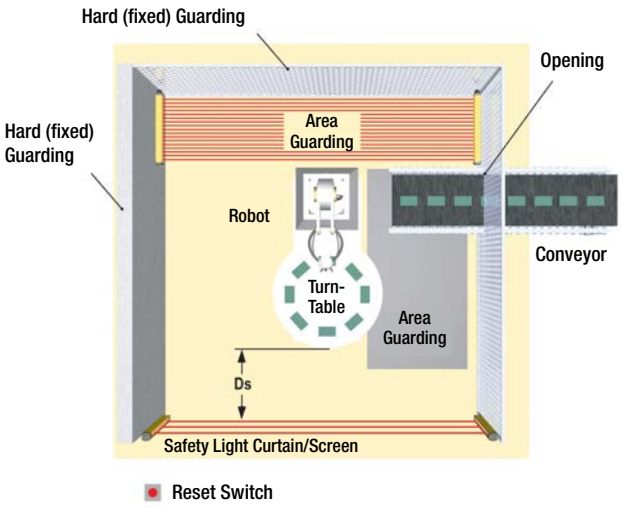

This is an example of supplemental safeguarding inside a robotic work cell. The SLC4, in conjunction with the hard (fixed) guarding, is the primary safeguard. Supplemental safeguarding (such as a horizontal-mounted safety light screen as an area guard) is required in areas that cannot be viewed from the reset switch (for example, behind the robot and the conveyor). Additional supplemental safeguarding may be required to prevent clearance or trapping hazards (for example, a safety mat as an area guard between the robot, the turntable, and the conveyor).

WARNING:
- **The hazard must be accessible only through the sensing field**
- Incorrect system installation could result in serious injury or death.
- The installation of the SLC4 must prevent any individual from reaching around, under, over or through the defined area and into the hazard without being detected.
- See OSHA CFR 1910.217, ANSI B11.19, and/or ISO 14119, ISO 14120 and ISO 13857 for information on determining safety distances and safe opening sizes for your guarding device. Mechanical barriers (for example, hard (fixed) guarding) or supplemental safeguarding might be required to comply with these requirements.

4.5 Other Considerations

4.5.1 Adjacent Reflective Surfaces

WARNING:
- **Do not install the system near reflective surfaces**
- Reflective surfaces could reflect the sensing beam(s) around an object or person within the defined area, preventing detection by the system. Failure to prevent reflection problems results in incomplete guarding and an optical short circuit that could result in serious injury or death.
- Do not locate the defined area near a reflective surface. Perform the trip test, as described in the product documentation, to detect such reflection(s).

A reflective surface located adjacent to the defined area may deflect one or more beams around an object in the defined area. In the worst case, an optical short circuit may occur, allowing an object to pass undetected through the defined area.

This reflective surface may result from shiny surfaces or glossy paint on the machine, the workpiece, the work surface, the floor, or the walls. Beams deflected by reflective surfaces are discovered by performing the trip test and the periodic checkout procedures. To eliminate problem reflections:

- If possible, relocate the sensors to move the beams away from the reflective surface(s), being careful to maintain adequate separation distance
- Otherwise, if possible, paint, mask, or roughen the shiny surface to reduce its reflectivity
- Where these are not possible (as with a shiny workpiece or machine frame), determine the worst-case resolution resulting from the optical short circuit and use the corresponding depth penetration factor (Dpf or C) in the Safety Distance (Minimum Distance) formula; or mount the sensors in such a way that the receiver's field of view and/or the emitter's spread of light are restricted from the reflective surface
- Repeat the trip test (see *Trip Test* under Initial Checkout Procedure on page 26) to verify these changes have eliminated the problem reflection(s). If the workpiece is especially reflective and comes close to the defined area, perform the trip test with the workpiece in place

Figure 4. Adjacent Reflective Surfaces

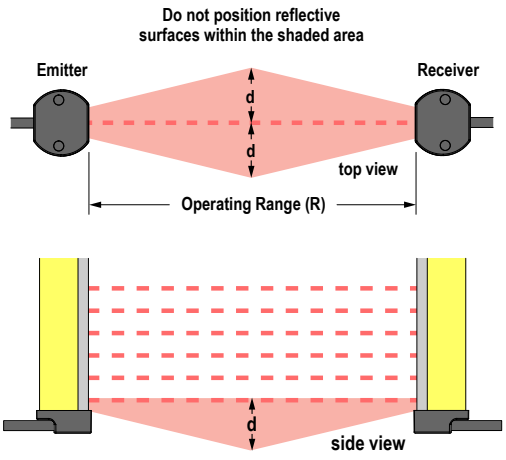

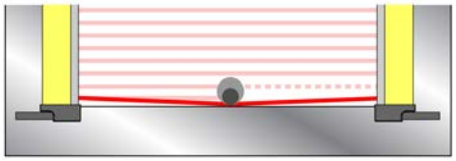

For 0.1 to 2 m (4 in to 6.5 ft) Operating range: d = 0.13 m (5 in)

At the midpoint of the defined area, a test piece (represented by the darker circle) with the specified system resolution does not cause a blocked condition due to an optical short circuit. Green Zone indicator lights are on and the OSSDs are on. Increasing the size of the test piece to block additional beams causes a blocked condition. The size of the test piece required to do this determines the actual resolution. Use the table below to calculate Dpf or Factor "C" when a shiny surface causes an optical short circuit.

Test Piece Model	Resolution	Depth Penetration Factor for U.S. Applications	Factor "C" for European Applications
STP-13	14 mm	24 mm (1 in)	0 mm
STP-21	24 mm	58 mm (2.3 in)	80 mm (3.1 in)

4.5.2 Use of Corner Mirrors

SLC4 may be used with one or more corner mirrors. Mirrors are not allowed for applications that would allow undetected personnel access into the safeguarded area. The use of glass-surface corner mirrors reduces the maximum specified emitter/receiver separation by approximately 8 percent per mirror, as follows:

Table 2: SSM and MSM Series Glass-Surface Mirrors [1] —Maximum Emitter and Receiver Separation

Number of Corner Mirrors	Maximum Emitter/Receiver Separation	Sensor Models
1	1.8 m (5.9 ft)	14 mm or 24 mm Resolution Models
2	1.6 m (5.2 ft)	
3	1.5 m (4.9 ft)	
4	1.4 m (4.6 ft)	

If mirrors are used, the difference between the angle of incidence from the emitter to the mirror and from the mirror to the receiver must be between 45° and 120°. If placed at a sharper angle, an object in the light screen may deflect beam(s) to the receiver, preventing the object from being detected, also know as false proxing. Angles greater than 120° result in difficult alignment and possible optical short circuits.

WARNING:
- **Retroreflective Mode Installation**
- Failure to follow these instructions may create unreliable sensing and may result in serious injury or death.
- Do not install emitters and receivers in retroreflective mode with less than a 45° angle of incidence. Install emitters and receivers at an appropriate angle.

Figure 5. Using SLC4 sensors in a retroreflective mode

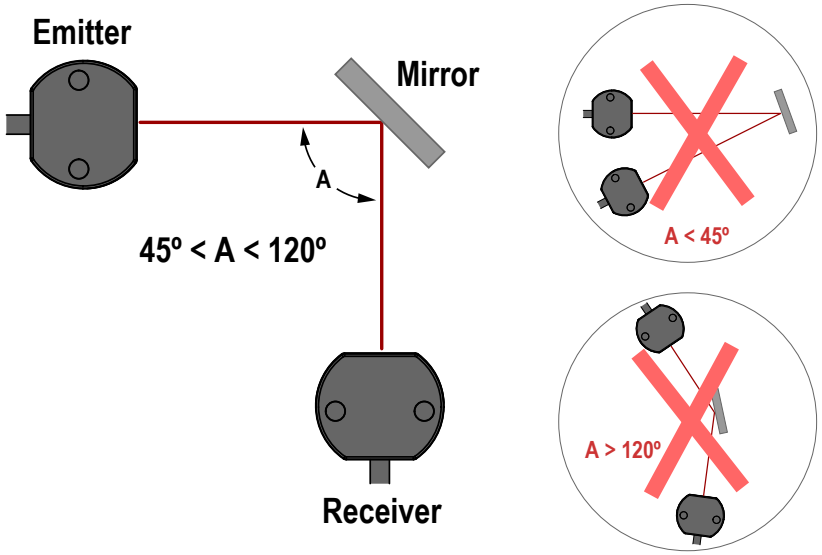

[1] *See the specific mirror data sheet or www.bannerengineering.com for more information.*

4.5.3 Emitter and Receiver Orientation

The emitter and receiver must be mounted parallel to each other and aligned in a common plane, with both machine interface cable ends pointing in the same direction. Never mount the emitter with its machine interface cable end oriented in the opposite direction of the cable end of the receiver. If this occurs, voids in the light screen may allow objects or personnel to pass through the defined area undetected.

The emitter and receiver may be oriented in a vertical or horizontal plane, or at any angle between horizontal and vertical, as long as they are parallel to each other and their cable ends point in the same direction. Verify that the light screen completely covers all access to the hazard point that is not already protected by hard (fixed) guarding or other supplemental guarding.

WARNING:

- **Properly install system components**
- Incorrectly orienting the system components impairs the performance of the system and results in incomplete guarding, which can result in serious injury or death.
- Install the system components with their corresponding cable ends pointing in the same direction.

Figure 6. Examples of Correct Emitter/Receiver Orientation

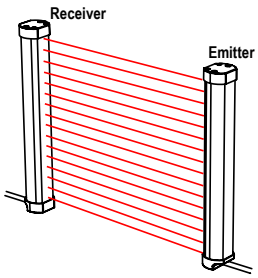

Both cable ends down

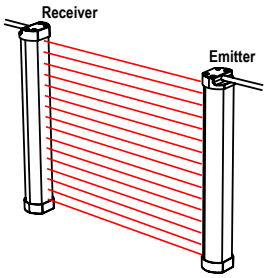

Both cable ends up

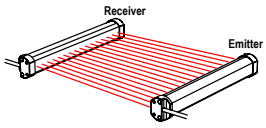

Orientation parallel to floor with both cable ends pointing in the same direction

Figure 7. Examples of Incorrect Emitter/Receiver Orientation

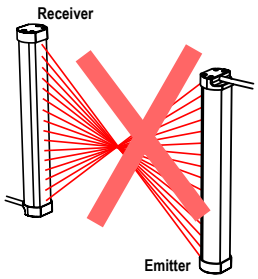

Cable ends point in opposite directions

Problem: Voids in defined area

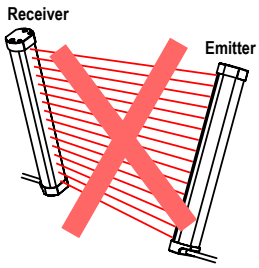

Emitter and receiver not parallel to each other

Problem: Reduced excess gain

4.5.4 Installing Multiple Systems

Whenever two or more SLC4 emitter and receiver pairs are adjacent to one another, optical crosstalk may take place between the systems. To minimize optical crosstalk, alternate the positions of the emitters and receivers as shown in Figure 8 on page 19.

When three or more systems are installed in the same plane, optical crosstalk may occur between sensor pairs whose emitter and receiver lenses are oriented in the same direction. In this situation, eliminate optical crosstalk by mounting these sensor pairs exactly in line with each other within one plane, or by adding a mechanical barrier between the pairs as shown in Figure 8 on page 19.

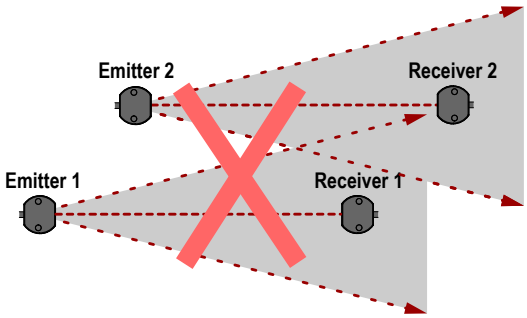

WARNING: Installing Multiple Systems. Two or more SLC4 systems that operate in close proximity may interfere with each other. Optical crosstalk between adjacent SLC4 systems could inadvertently cause one system to synchronize with another. This could result in serious injury or death.

Figure 8. Installing Multiple Systems

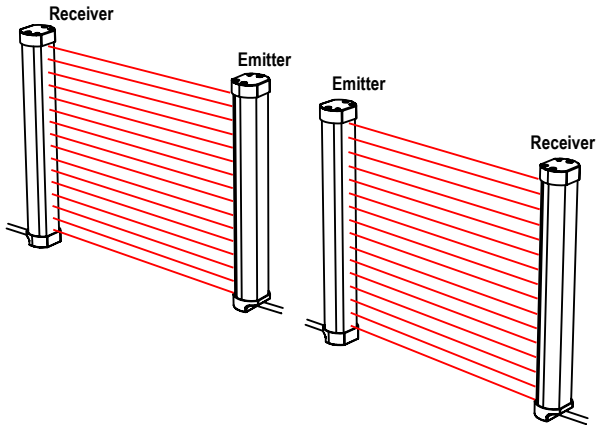

a. Two systems in a horizontal plane

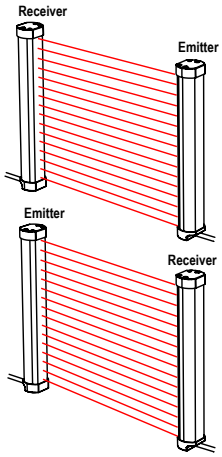

b. Two or three systems stacked (or alternate receiver/ emitter positions)

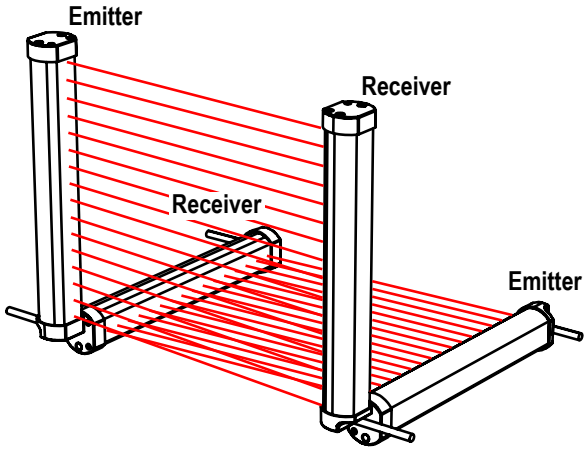

c. Two systems at right angles

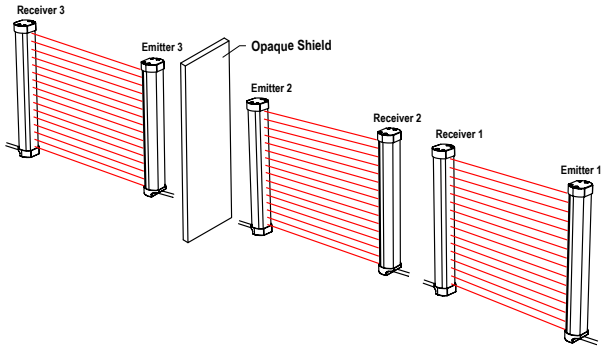

d. Multiple systems

WARNING:
- **Properly connect multiple pairs of sensors**
- Connecting multiple output signal switching devices (OSSD) safety outputs to one interface module or otherwise parallel OSSD outputs can result in serious bodily injury or death, and is prohibited.
- Do not connect multiple pairs of sensors to a single device.

4.6 Mounting System Components

4.6.1 Mounting Hardware

Emitter/receiver pairs can be spaced from 0.1 m (4 in) to 2 m (6.5 ft) apart. This distance is reduced if corner mirrors are used (see Use of Corner Mirrors on page 17).

All mounting brackets are sold separately. Optional fixed end-cap brackets, SLC4A-MBK-11, do not allow any rotation. Optional side brackets, SLC4A-MBK-12, allow ±15° rotation. Optional end brackets, SLC4A-MBK-10, allow ±20° rotation.

4.6.2 Mounting the End Brackets

Figure 9. End-Mount Brackets



- Four brackets are supplied with the accessory kit.
- See Mounting Brackets on page 48 for mounting bracket dimensions.

Important: The connector ends of both sensors must point in the same direction (see Emitter and Receiver Orientation on page 18). Loosely mount the brackets to the desired surface using the user-supplied M4 or #8 hardware (shown). Tighten to 19 in-lbs.

The M4 hardware shown can be mounted from either side. Tighten to 2.15 N·m (19 in·lbs).

1. From a common point of reference (ensuring the calculated minimum safety distance), measure to position the emitter and receiver in the same plane, with their midpoints directly opposite each other.
2. Attach an end bracket to each end of the sensor using the supplied #2-56 screws and 5/64-inch hex key. Tighten the screws to 0.34 N·m (3 in·lbs) using the 5/64-inch hex key.
3. Position the emitter and receiver, with their brackets installed, as shown in Emitter and Receiver Orientation on page 18.
4. Verify that the sensor windows directly face each other. Measure from a reference plane, for example, a level building floor, to the same point(s) on the emitter and receiver to verify their mechanical alignment. Use a carpenter's level, a plumb bob, or check the diagonal distances between the sensors, to achieve mechanical alignment. Final alignment procedures are explained in Initial Checkout Procedure on page 26.
5. Mount the emitter and receiver to the desired surface with user-supplied M4 or #8 bolts and nuts.
6. Tighten all fasteners to 2.15 N·m (19 in·lbs).

4.6.3 Mounting the Optional SLC4A-MBK-10 Brackets

Figure 10. Optional SLC4A-MBK-10 End-Mount Brackets

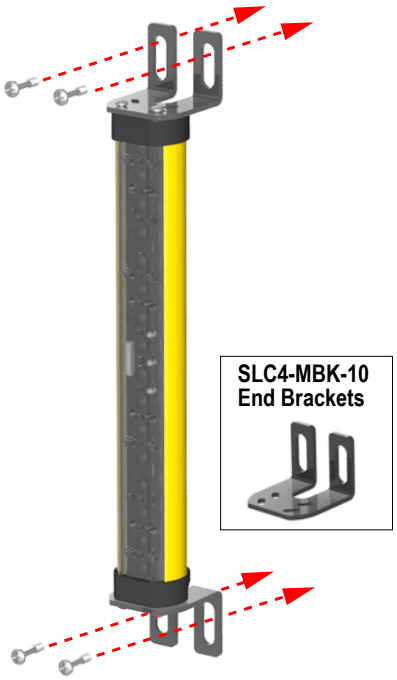

- Four brackets are supplied with the accessory kit.
- See Mounting Brackets on page 48 for mounting bracket dimensions.

Important: The connector ends of both sensors must point in the same direction (see Emitter and Receiver Orientation on page 18). Loosely mount the brackets to the desired surface using the user-supplied M5 or #10 hardware (shown).

Tighten the user-supplied hardware to 2.15 N·m (19 in·lbs).

1. From a common point of reference (ensuring the calculated minimum safety distance), measure to position the emitter and receiver in the same plane, with the midpoints directly opposite each other.
2. Attach an end bracket to each end of the sensor using the supplied #2-56 screws and 5/64-inch hex key. Tighten the screws to 0.34 N-m (3 in-lbs) using the 5/64-inch hex key.
3. Position the emitter and receiver, with their brackets installed, as shown in Emitter and Receiver Orientation on page 18.
4. Verify that the sensor windows directly face each other. Measure from a reference plane, for example, a level building floor, to the same point(s) on the emitter and receiver to verify their mechanical alignment. Use a carpenter's level, a plumb bob, or check the diagonal distances between the sensors, to achieve mechanical alignment. Final alignment procedures are explained in Initial Checkout Procedure on page 26.
5. Mount the emitter and receiver to the desired surface with user-supplied M5 or #10 bolts and nuts.
6. Tighten all fasteners to 2.15 N·m (19 in·lbs).

4.6.4 Mounting the Side Brackets

Figure 11. Side-Mount Brackets

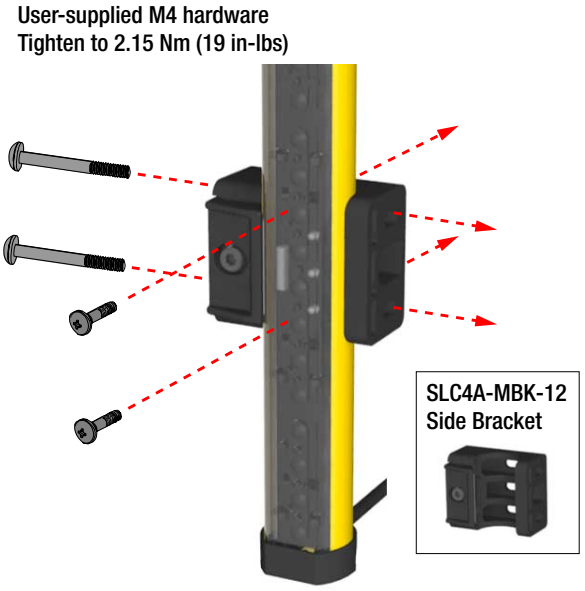

Figure 12. ±15° Rotation

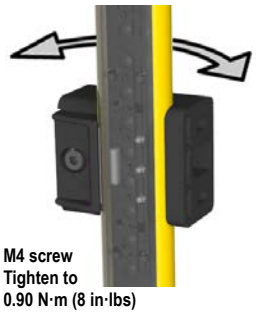

1. From a common point of reference (ensuring the calculated minimum safety distance), measure to locate the emitter and receiver in the same plane, with their midpoints directly opposite each other. The connector ends of both sensors must point in the same direction (see Emitter and Receiver Orientation on page 18).
2. Mount the emitter and receiver side brackets to the desired surface with user-supplied M4 bolts and nuts. Tighten to 2.15 N·m (19 in·lbs).
3. Insert each light curtain into its respective bracket. Begin by orienting the sensor so the narrow dimension of the housing, from the front window to the flat back, fits within the opening in the front of the bracket. Then rotate the sensor approximately 90 degrees so the front window faces out of the opening in the front of the bracket.
4. Position the emitter and receiver windows directly facing each other. Measure from a reference plane, for example, a level building floor, to the same point(s) on the emitter and receiver to verify their mechanical alignment. Use a carpenter's level, a plumb bob, or check the diagonal distances between the sensors, to achieve mechanical alignment. Final alignment procedures are explained in Initial Checkout Procedure on page 26.
5. After the emitter and receiver alignment is completed, tighten the bracket front M4 screws to 0.90 N·m (8 in·lbs).

4.6.5 Sensor Mounting and Mechanical Alignment Verification

Verify that:

- The emitter and receiver are directly opposite each other
- Nothing is interrupting the defined area
- The defined area is the same distance from a common reference plane for each sensor
- The emitter and receiver are in the same plane and are level/plumb and square to each other (vertical, horizontal, or inclined at the same angle, and not tilted front-to-back or side-to-side)

Figure 13. Incorrect Sensor Alignment

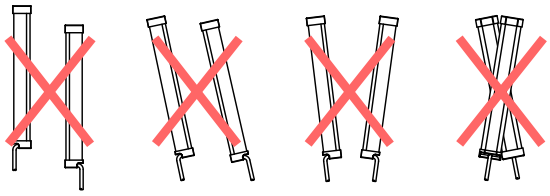

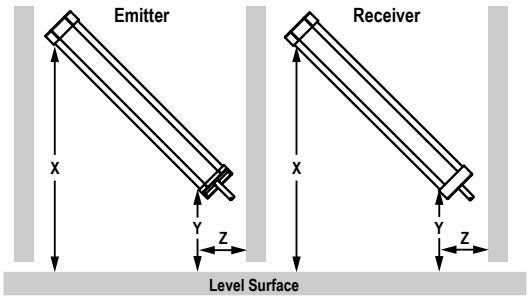

Angled or Horizontal Installations – verify that:

- Distance X at the emitter and receiver are equal
- Distance Y at the emitter and receiver are equal
- Distance Z at the emitter and receiver are equal from parallel surfaces
- Vertical face (the window) is level/plumb
- Defined area is square. Check diagonal measurements if possible; see Vertical Installations, on the right.

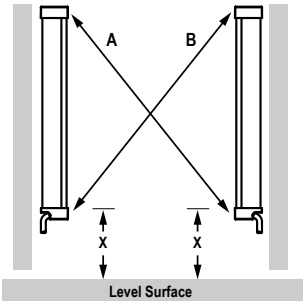

Vertical Installations – verify that:

- Distance X at the emitter and receiver are equal
- Both sensors are level/plumb (check both the side and face)
- Defined area is square. Check diagonal measurements if possible (Diagonal A = Diagonal B).

4.6.6 Mounting Dimensions and Defined Area

All measurements are listed in millimeters [inches], unless noted otherwise.

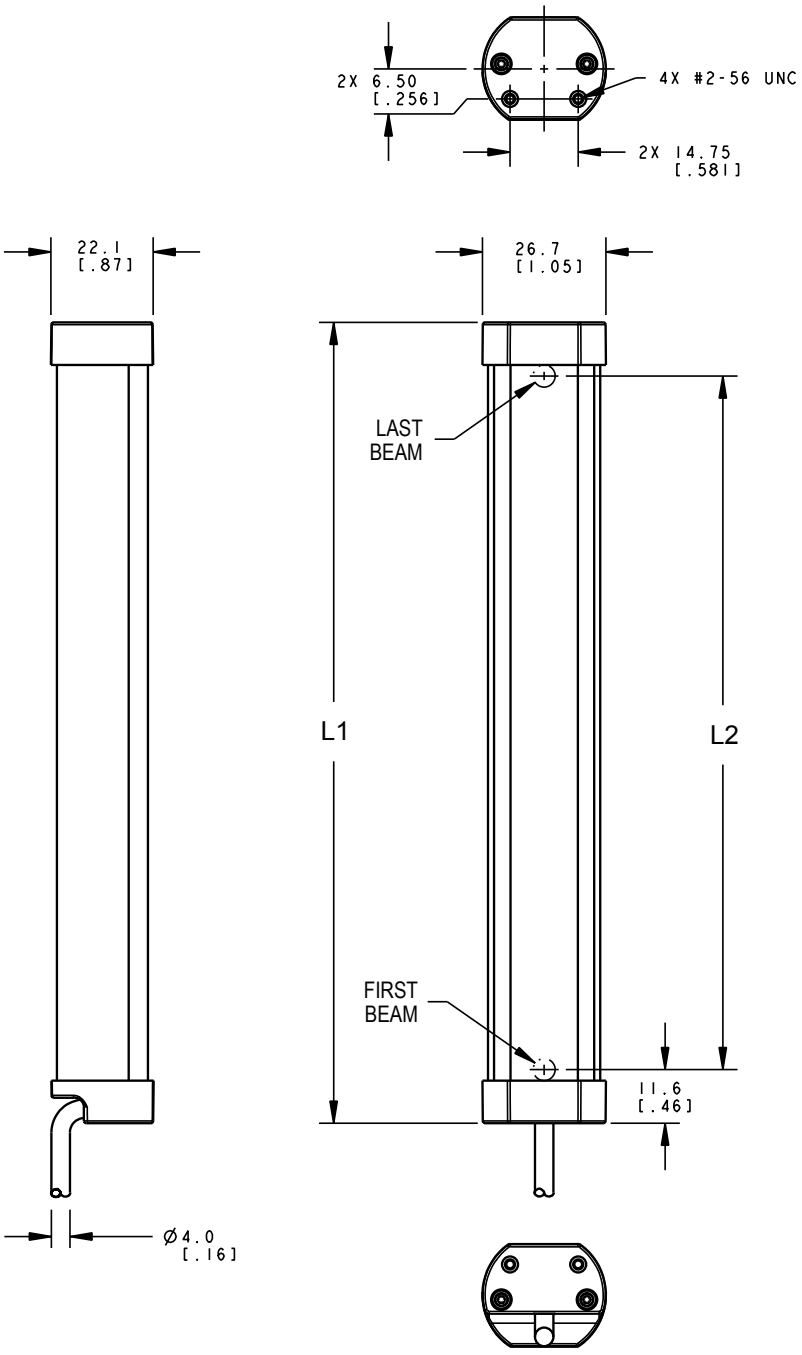

Emitter/Receiver Model	Housing Length (L1)	First to Last Beam Spacing (L2) (mm)	Defined Area (mm)
SLC4x14-160P4	173.2 mm (6.82 in)	150	160
SLC4x24-160P4	173.2 mm (6.82 in)	140	160
SLC4x14-240P4	253.2 mm (9.97 in)	230	240
SLC4x24-240P4	253.2 mm (9.97 in)	220	240
SLC4x14-320P4	333.2 mm (13.12 in)	310	320
SLC4x24-320P4	333.2 mm (13.12 in)	300	320

5 Electrical Installation and Testing

The following are the main steps to electrically install the SLC4 components and interface with the guarded machine.

WARNING:

- **Read this Section Carefully Before Installing the System**
- **Failure to follow these instructions could result in serious injury or death.**
- If all mounting, installation, interfacing, and checkout procedures are not followed properly, this Banner Engineering device cannot provide the protection for which it was designed.
- The user is responsible for ensuring that all local, state, and national laws, rules, codes, or regulations relating to the installation and use of this control system in any particular application are satisfied. Ensure that all legal requirements have been met and that all technical installation and maintenance instructions contained in this manual are followed.
- The user has the sole responsibility to ensure that this Banner Engineering device is installed and interfaced to the guarded machine by Qualified Persons, in accordance with this manual and applicable safety regulations. A Qualified person is a person who, by possession of a recognized degree or certificate of professional training, or who, by extensive knowledge, training and experience, has successfully demonstrated the ability to solve problems relating to the subject matter and work.

1. Routing cordsets and making initial electrical connections (see Routing Cordsets on page 25 and Initial Electrical Connections on page 26).
2. Apply power to each emitter/receiver pair (see Initial Electrical Connections on page 26).
3. Perform an Initial Checkout Procedure (see Initial Checkout Procedure on page 26).
4. Make all electrical interface connections to the guarded machine (see Electrical Connections to the Guarded Machine on page 30).
5. Perform a commissioning checkout procedure (see Commissioning Checkout on page 32).

5.1 Routing Cordsets

Attach the required cordsets to the sensors, and route the sensor cables to the junction box, electrical panel, or other enclosure in which the other safety-related parts of the control system are located. This must be done per local wiring code for low-voltage dc control cables and may require installation of electrical conduit. See Accessories on page 44 for selection of Banner supplied cables.

The SLC4 is designed and manufactured to be highly resistant to electrical noise and to operate reliably in industrial settings. However, extreme electrical noise may cause a random Trip condition; in extreme cases, a Lockout is possible.

Emitter and receiver wiring is low voltage; routing the sensor wires alongside power wires, motor/servo wires, or other high voltage wiring may inject noise into the SLC4 System. It is good wiring practice, and sometimes may be required by code, to isolate emitter and receiver cables from high-voltage wires and to avoid routing cables close to sources of noise.

Sensor cabling and any interconnect wiring should have an insulation temperature rating of at least 90 °C (194 °F).

Table 3: Maximum machine interface cable length versus total load current

Maximum Machine Interface Cordset Length (for 22 AWG wire)					
Total Load Current (OSSD 1 + OSSD 2)					
0.1 A *	**0.2 A ***	**0.3 A ***	**0.4 A**	**0.5 A**	**0.6 A**
95 m (312 ft)	95 m (312 ft)	95 m (312 ft)	86 m (283 ft)	72 m (238 ft)	62 m (205 ft)

* Maximum cordset length is limited to 95 m (312 ft) to ensure less than 5 ohms wire resistance.

Note: Emitter and receiver power (current) requirements are accounted for. The above values represent additional current draw that must be accounted for.

Note: Maximum cordset lengths are intended to ensure that adequate power is available to the SLC4 when the supply is operating at +20 V dc. Values in the previous table are worse case. Contact Banner Engineering if there are any questions.

5.2 Initial Electrical Connections

WARNING:
- **Risk of electric shock**
- Use extreme caution to avoid electrical shock. Serious injury or death could result.
- Always disconnect power from the safety system (for example, device, module, interfacing, etc.), guarded machine, and/or the machine being controlled before making any connections or replacing any component. Lockout/tagout procedures might be required. Refer to OSHA 29CFR1910.147, ANSI Z244-1, or the applicable standard for controlling hazardous energy.
- Make no more connections to the device or system than are described in this manual. Electrical installation and wiring must be made by a Qualified Person [2] and must comply with the applicable electrical standards and wiring codes, such as the NEC (National Electrical Code), NFPA 79, or IEC 60204-1, and all applicable local standards and codes.

Lockout/tagout procedures may be required (refer to OSHA1910.147, ANSI Z244-1, ISO 14118, or the appropriate standard for controlling hazardous energy).

Make the electrical connections in the order described in this section. Do not remove end-caps; no internal connections are to be made. All connections are made through the pigtail QD connection.

Emitter Cordset

SLC4 emitters require a mating 5-pin cordset, but not all conductors are used. The other wires are in place to allow a parallel connection (color-for-color) to the receiver cable, providing sensor interchangeability (or “swapability”); either sensor may be installed at either cordset connection. In addition to providing similar cabling, this wiring scheme is advantageous during installation, wiring, and troubleshooting.

Receiver Cordset

Do not connect any wires to the machine control circuits (OSSD outputs) at this time.

5.3 Initial Checkout Procedure

The initial checkout procedure must be performed by a Qualified Person. It must be performed only after configuring the System and after connecting the components.

Perform this procedure to:
- Ensure proper installation when the System is first installed
- Ensure proper System function whenever any maintenance or modification is performed on the System or on the machinery that is guarded by the System.

5.3.1 Configuring the System for Initial Checkout

For the initial checkout, the SLC4 System must be checked without power available to the guarded machine. Final interface connections to the guarded machine cannot take place until the light screen system has been checked out. This may require lockout/tagout procedures (refer to OSHA1910.147, ANSI Z244-1, ISO 14118, or the appropriate standard for controlling hazardous energy). The OSSD connections will be made after the initial checkout procedure has been successfully completed.

Verify that:
- Power has been removed from (or is not available to) the guarded machine and its controls or actuators
- The machine control circuit or the Safety/Interface Module is not connected to the OSSD outputs at this time (permanent connections will be made later)

5.3.2 Apply Initial Power to the Machine

1. Inspect the area near the light screen for reflective surfaces, including work pieces and the guarded machine. Reflective surfaces may cause light beams to reflect around a person in the light screen, preventing the person from being detected and not stopping the machine motion (see Adjacent Reflective Surfaces on page 16).
2. Eliminate the reflective surfaces as much possible by relocating, painting, masking, or roughening them. Remaining problem reflections will become apparent during the trip test.

[2] A person who, by possession of a recognized degree or certificate of professional training, or who, by extensive knowledge, training and experience, has successfully demonstrated the ability to solve problems relating to the subject matter and work.

3. Verify that power is removed from the SLC4 System and from the guarded machine and that the OSSD safety outputs are not connected.
4. Remove all obstructions from the light screen.
5. With the power to the guarded machine off, connect +24 V dc (brown wire) and 0 V dc (blue wire) on both the emitter and receiver cables to a SELV-rated power supply (see Wiring Diagrams on page 33).
6. Power up the SLC4 System only.
7. Verify that the input power is present to both the emitter and the receiver. At least one indicator on both the emitter and the receiver should be on and the start-up sequence should cycle.
8. Watch both the emitter and the receiver Status indicators and the receiver Zone indicators to determine the light screen alignment status.
   - **Emitter Lockout Condition**—the emitter's red Status indicator is single-flashing and the receiver's red Status indicator is on. Proceed to Troubleshooting on page 38 for diagnostic information.
   - **Receiver Lockout Condition** —the receiver Status indicator is single-flashing red and the Zone indicators are off. Proceed to Troubleshooting on page 38 for diagnostic information.
   - **Normal Operating Mode** (emitter)—The green Status indicator is on.
   - **Clear (Run) Condition** (receiver)—The green Status indicator is on. All green Zone indicators are on.
   - **A Blocked Condition** (receiver)—The red Status indicator is on and one or more red Zone indicator(s) are on, identifying the location of the blocked beams. Proceed to Optically Align the System Components on page 27.

Note: If beam 1 is blocked, Zone indicator 1 is red and all others are off. Beam 1 provides the synchronization signal.

See Operating Features on page 10 for indicator and display information.

5.3.3 Optically Align the System Components

To verify the optimal alignment, adjust the sensor rotation with the power on and follow these steps.

WARNING:
- **Hazard exposure**
- Failure to follow these instructions could result in serious injury or death.
- Verify that no individuals are exposed to any hazard if the output signal switching device (OSSD) outputs turn on when the emitter and receiver become aligned.

Before beginning, verify the sensor mounting.

1. Verify that the emitter and the receiver are pointed squarely at each other. The sensor face must be perpendicular to the optical axis.

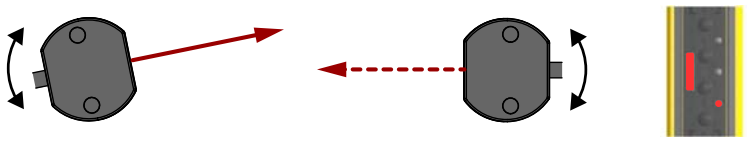

If the Channel #1 beam is not aligned, the Status and Zone 1 indicators are red and Zone indicators 2–3 are Off.

2. If the green Status indicator is on, go to the next step. If not, rotate each sensor (one at a time) left and right until the green Status indicator is on. (As the sensor rotates out of alignment, the red Status indicator turns on). As more beams are aligned, the Zone indicators turn from red to green.

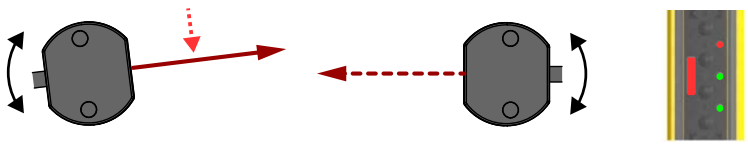

3. Optimize alignment and maximize excess gain.

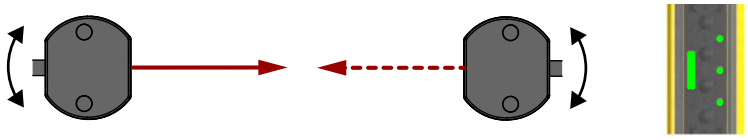

a) Slightly loosen the sensor mounting screws.
b) Rotate one sensor left and right, noting the positions in each arc where the Status indicators turn red (Blocked condition); repeat with the other sensor.
c) Center each sensor between those two positions.
d) Tighten the mounting screws, making sure to maintain the positioning as the screws are tightened.

If at any time the red Status indicator begins to flash, the System has entered a Lockout condition. See Troubleshooting on page 38 for further information.

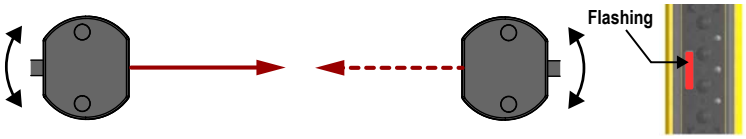

5.3.4 Optical Alignment Procedure with Mirrors

SLC4 sensors may be used with one or more corner mirrors for guarding more than one side of an area. The MSM-... and SSM-... rear-surface glass mirrors are rated at 85% efficiency. Thus, excess gain and sensing range are reduced when using mirrors; see Use of Corner Mirrors, under Mechanical Installation Considerations on page 12.

During any adjustments, allow only one individual to adjust any one item at any one time.

In addition to the standard optical alignment procedure, verify:

1. The emitter, receiver, and all mirrors are level and plumb.
2. The middle of the defined area and the center point of the mirrors are approximately the same distance from a common reference point, such as the same height above a level floor.
3. There are equal amounts of mirror surface above and below the defined area such that the optical beams are not passing below or above the mirror.

Figure 14. Corner Mirror Alignment

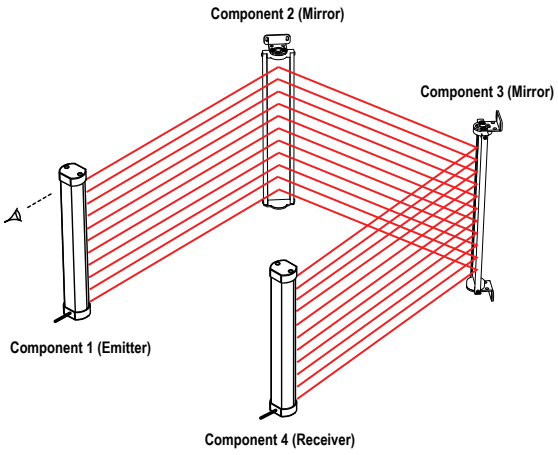

5.3.5 Conduct a Trip Test

After optimizing the optical alignment and configuring fixed blanking and/or reduced resolution (if applicable), perform a trip test to verify the detection capability of the SLC4 System. This test also verifies correct sensor orientation, identifies optical short circuits, and verifies the expected resolution for applications using reduced resolution. After the installation has passed the trip test, the safety outputs may be connected and the commissioning checkout may be performed (initial installations only).

1. Select the proper test piece, supplied with the receiver.
   - For 14 mm resolution models: Use the 14 mm (0.55 in) diameter model STP-13
   - For 24 mm resolution models: Use the 24 mm (0.94 in) diameter model STP-21
2. Verify that the System is in run mode, the green Status indicator is on, and all Zone indicators are green.
3. Pass the specified test piece through the defined area in three paths: near the emitter, near the receiver, and midway between the emitter and receiver.

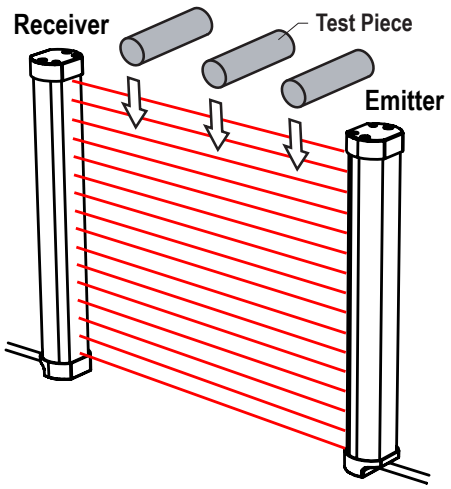

4. During each pass, while the test piece is interrupting the defined area, at least one Zone indicator must be red. The red Zone indicator must change with the position of the test piece within the defined area.
   The Status indicator must turn red and remain red for as long as the test piece remains in the defined area. If not, the installation has failed the trip test.

   If all Zone indicators turn green or fail to follow the position of the test piece while it is within the defined area, the installation has failed the trip test. Check for correct sensor orientation or reflective surfaces. Do not continue until the situation is corrected.

   When the test piece is removed from the defined area, the green Status indicator must turn on.

WARNING:
- **Trip test failure**
- Using a system that has failed a trip test can result in serious bodily injury or death. If the trip test has failed, the system might not stop dangerous machine motion when a person or object enters the sensing field.
- Do not attempt to use the system if the system does not respond properly to the trip test.

5. If mirrors are used in the application: Test the defined area on each leg of the sensing path (for example, emitter to mirror, between mirror and receiver).

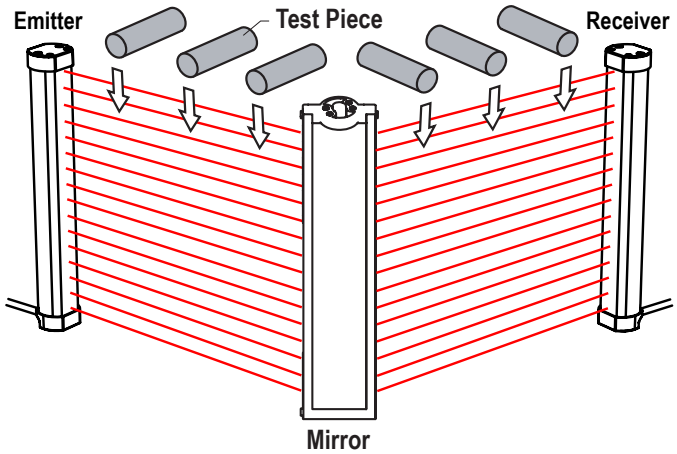

6. If the SLC4 System passes all checks during the trip test, go on to Electrical Connections to the Guarded Machine on page 30.

5.4 Electrical Connections to the Guarded Machine

Verify that power has been removed from the SLC4 and the guarded machine. Make the permanent electrical connections as required by each individual application.

Lockout/tagout procedures may be required (refer to OSHA 1910.147, ANSI Z244-1, ISO 14118, or the appropriate standard for controlling hazardous energy). Follow relevant electrical standards and wiring codes, such as the NEC, NFPA79 or IEC 60204-1.

Supply power should already be connected. The SLC4 must also have been aligned and passed the Initial Checkout, as described in Initial Checkout Procedure on page 26.

The final connections to be made or verified are:

- OSSD outputs

WARNING:

- **Risk of electric shock**
- Failure to follow these instructions could result in serious injury or death.
- Disconnect or turn off power before installing, removing, or servicing the device.
- Install and connect the device in accordance with the National Electrical Code (NEC) and any applicable local code requirements and supply the device with an appropriate fuse box or circuit breaker (see *Specifications*).

5.4.1 Protective Stop (Safety Stop) Circuits

A protective stop (safety stop) allows for an orderly cessation of motion for safeguarding purposes, which results in a stop of motion and removal of power from the Machine Primary Control Elements (MPCE) (assuming this does not create additional hazards).

A protective stop circuit typically comprises a minimum of two normally open contacts from forced-guided, mechanically linked relays, which are monitored through External Device Monitoring (EDM) to detect certain failures, to prevent the loss of the safety function. Such a circuit can be described as a "safe switching point".

Typically, protective stop circuits are either single channel, which is a series connection of at least two normally open contacts; or dual-channel, which is a separate connection of two normally open contacts. In either method, the safety function relies on the use of redundant contacts to control a single hazard. If one contact fails On, the second contact arrests the hazards and prevents the next cycle from occurring.

The interfacing of the protective stop circuits must be accomplished so that the safety function cannot be suspended, overridden, or defeated, unless accomplished in a manner of the same or greater degree of safety as the machine's safety related control system that includes the SLC4.

A Banner XS26-2 Safety Controller with XS1ro or XS2ro Relay Expansion Module, Banner SC10-2roe Safety Controller, or Banner UM-FA-xA Universal Safety Module provides a series connection of redundant contacts that form protective stop circuits for use in either single-channel or dual-channel control.

Output Signal Switching Devices (OSSDs) and External Device Monitoring (EDM)

The SLC4 is able to detect faults on OSSD1 and OSSD2. These faults include short circuits to +24 V dc and 0 V, and between OSSD1 and OSSD2.

Both Output Signal Switching Device (OSSD) outputs must be connected to the machine control so that the machine's safety-related control system interrupts the circuit or power to the Machine Primary Control Element(s) (MPCE), resulting in a non-hazardous condition.

Final Switching Devices (FSDs) typically accomplish this when the OSSDs go to an OFF state.

Refer to the output specifications in the Receiver Specifications and these warnings before making OSSD output connections and interfacing the SLC4 to the machine.

WARNING:
- **Interfacing both output signal switching devices (OSSD)**
- Failure to follow these instructions could result in serious injury or death.
- Unless the same degree of safety is maintained, never wire an intermediate device(s) (PLC, PES, PC) between the safety module outputs and the master stop control element it switches such that a failure causes a loss of the safety stop command or the failure allows the safety function to be suspended, overridden, or defeated.
- Connect both OSSD outputs to the machine control so that the machine's safety-related control system interrupts the circuit to the machine primary control element(s), resulting in a non-hazardous condition.

WARNING:
- **OSSD Interfacing**
- Failure to properly interface the OSSD Outputs to the guarded machine could result in serious injury or death.
- To ensure proper operation, the Banner device output parameters and machine input parameters must be considered when interfacing the Banner device OSSD outputs to machine inputs. Design machine control circuitry so that all of the following are true:

  The maximum load resistance value is not exceeded.

  The maximum specified OSSD OFF-state voltage does not result in an ON condition.

External device monitoring (EDM) is a function used to monitor the state of the external, positively guided (mechanically linked) machine control contacts (FSDs and/or MPCEs). The SLC4 System does not include the EDM function. As a result, the SLC4 System should be used with an external safety monitoring device that monitors the status of the two SLC4 OSSDs and is capable of providing the EDM function. Examples of appropriate external safety monitoring devices include Banner SC26-2 and XS26-2 Safety Controllers, SC10-2roe Safety Controller, Banner UM-FA-9A and UM-FA-11A Universal Input Safety Modules, and Safety PLCs.

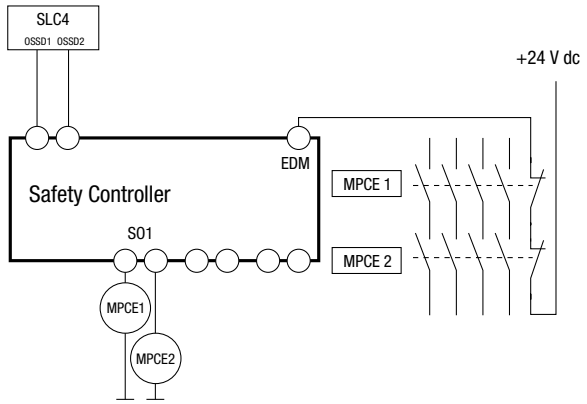

Single-channel EDM used to monitor both MPCE feedback signals. If one or both channels do not close, the system enters a lockout mode.

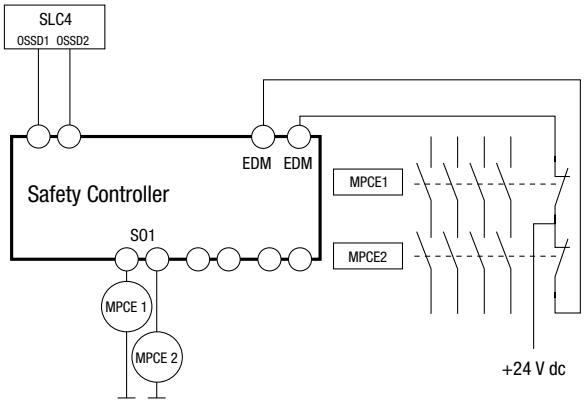

Dual-channel EDM used to monitor both MPCE feedback signals. If the channels are not in the same state, the system enters a Lockout mode.

WARNING:
- The SLC4 does not have external device monitoring (EDM).
- If EDM is required for the application, it must be implemented in the external control.

5.4.2 Preparing for System Operation

After the initial trip test has been accomplished, and the OSSD safety outputs connections have been made to the external control device, the SLC4 is ready for testing in combination with the guarded machine.

The operation of the SLC4 with the guarded machine must be verified before the combined System and machine may be put into service. To do this, a Qualified Person must perform the Commissioning Checkout Procedure.

5.4.3 Sensor Interchangeability

The figures and table below illustrate a wiring option that provides sensor interchangeability (or swapability)—the ability to install either sensor at either QD connection.

The resulting installation provides the ability to swap the emitter and receiver position, similar to a popular feature of Banner EZ-SCREEN and EZ-SCREEN LP safety light screens. This wiring option provides advantages during installation, wiring, and troubleshooting.

To use this option, connect all emitter wires in parallel (color-for-color) to the receiver cable via individual wires or the CSB.. splitter cordset .

Model CSB.. splitter cordsets and DEE2R.. double-ended cordsets allow easy interconnection between an SLC4 receiver and emitter, providing a single homerun cordset.

Figure 15. Individual Cordsets

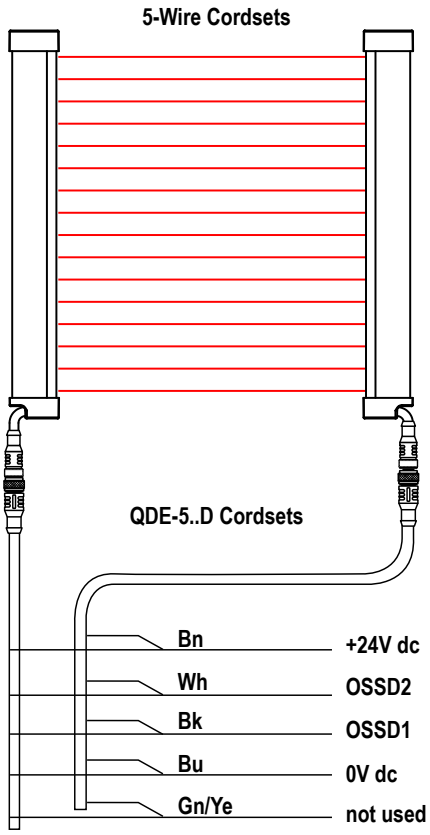

Figure 16. Splitter Cordsets

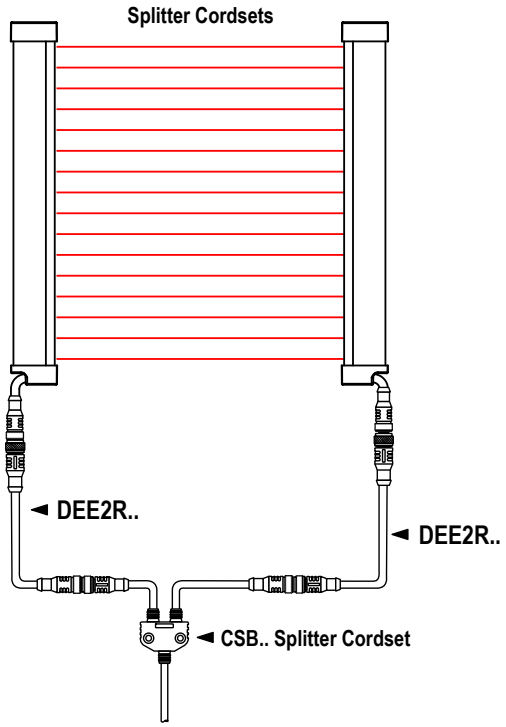

5.4.4 Commissioning Checkout

Perform this checkout procedure as part of the System installation after the System has been interfaced to the guarded machine, or whenever changes are made to the System (either a new configuration of the SLC4 or changes to the machine).

WARNING:

- **Do not use the system until the checkouts are verified**
- Attempts to use the guarded/controlled machine before these checks are verified could result in serious injury or death.
- If all these checks cannot be verified, do not attempt to use the safety system that includes the Banner Engineering device and the guarded/controlled machine until the defect or problem has been corrected.

A Qualified Person must perform the procedure. Checkout results should be recorded and kept on or near the guarded machine as required by applicable standards.

To prepare the System for this checkout:

1. Examine the guarded machine to verify that it is of a type and design compatible with the SLC4 System. See Examples: Inappropriate Applications on page 10 for a list of misapplications.

2. Verify that the SLC4 is configured for the intended application.
3. Verify that the safety distance (minimum distance) from the closest danger point of the guarded machine to the defined area is not less than the calculated distance, per Calculating the Safety Distance (Minimum Distance) on page 12.
4. Verify that:
   a) Access to any dangerous parts of the guarded machine is not possible from any direction not protected by the SLC4 System, hard (fixed) guarding, or supplemental safeguarding, and
   b) It is not possible for a person to stand between the defined area and the dangerous parts of the machine, or
   c) Supplemental safeguarding and hard (fixed) guarding, as described by the appropriate safety standards, are in place and functioning properly in any space (between the defined area and any hazard) which is large enough to allow a person to stand undetected by the SLC4.
5. If used, verify that all reset switches are mounted outside and in full view of the guarded area, out of reach of anyone inside the guarded area, and that means of preventing inadvertent use is in place.
6. Examine the electrical wiring connections between the SLC4 OSSD outputs and the guarded machine's control elements to verify that the wiring meets the requirements stated in Electrical Connections to the Guarded Machine on page 30.
7. Inspect the area near the defined area (including work pieces and the guarded machine) for reflective surfaces (see Adjacent Reflective Surfaces on page 16). Remove the reflective surfaces if possible by relocating them, painting, masking or roughening them. Remaining problem reflections will become apparent during the Trip Test.
8. Verify that power to the guarded machine is Off. Remove all obstructions from the defined area. Apply power to the SLC4 System.
9. Observe the Status indicators and Diagnostic Display:
   - **Lockout:** Red Status flashing; all others off
   - **Blocked:** Red Status on; one or more red Zone indicators on
   - **Clear:** Green Status on; all green Zone indicators on
10. A Blocked condition indicates that one or more of the beams is misaligned or interrupted. See Optically Align the System Components on page 27 to correct this situation.
11. After the green Status indicator is on, perform the trip test (Conduct a Trip Test on page 28) on each sensing field to verify proper System operation and to detect possible optical short circuits or reflection problems. **Do not continue until the SLC4 passes the trip test.**

Important: Do not expose any individual to any hazard during the following checks.

WARNING:
- **Clear the guarded area before applying power or resetting the system**
- Failure to clear the guarded area before applying power could result in serious injury or death.
- Verify that the guarded area is clear of personnel and any unwanted materials before applying power to the guarded machine or before resetting the system.

12. Apply power to the guarded machine and verify that the machine does not start up.
13. Interrupt (block) the defined area with the supplied test piece and verify it is not possible for the guarded machine to be put into motion while the beam(s) is blocked.
14. Initiate machine motion of the guarded machine and, while it is moving, use the supplied test piece to block the defined area. Do not attempt to insert the test piece into the dangerous parts of the machine. Upon blocking any beam, the dangerous parts of the machine must come to a stop with no apparent delay.
15. Remove the test piece from the beam; verify that the machine does not automatically restart, and that the initiation devices must be engaged to restart the machine.
16. Remove electrical power to the SLC4. Both OSSD outputs should immediately turn Off, and the machine must not be capable of starting until power is re-applied to the SLC4.
17. Test the machine stopping response time, using an instrument designed for that purpose, to verify that it is the same or less than the overall system response time specified by the machine manufacturer.

Do not continue operation until the entire checkout procedure is complete and all problems are corrected.

5.5 Wiring Diagrams

5.5.1 Generic Emitter Wiring Diagram

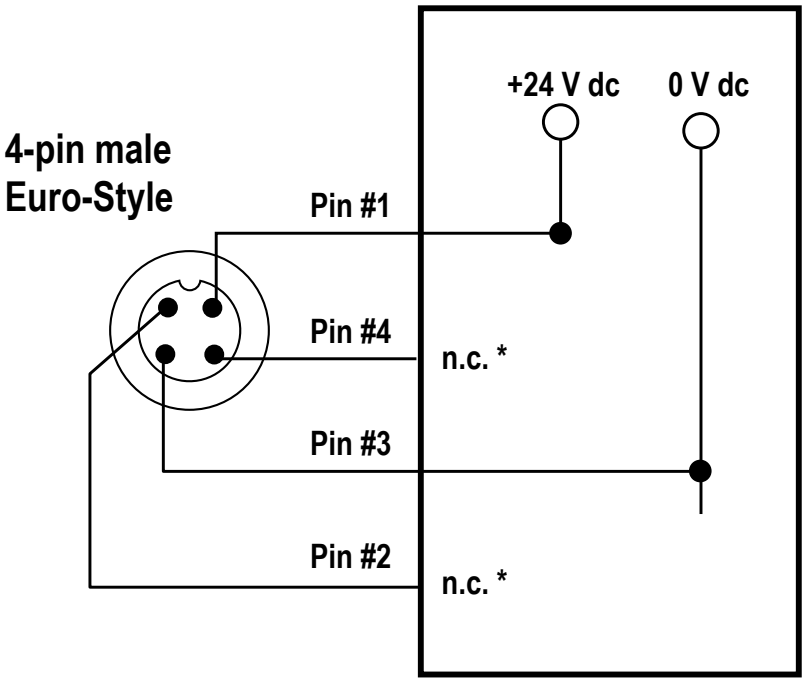

* All pins shown as no connection (n.c.) are either not connected or are paralleled to same color wire from the receiver cable.

Mating QDE-5..D Cordset Pinout			M12 Connector (female face view)
Pin	**Color**	**Emitter Function**	
1	brown	+ 24 V dc	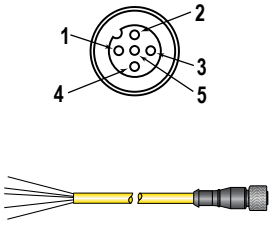
2	white	no connection	
3	blue	0 V dc	
4	black	no connection	
5	green/yellow	no connection	

5.5.2 Generic Receiver Wiring Diagram—Self-checking Safety Module, Safety Controller, Safety PLC

Generic wiring for a self-checking Safety module, Safety Controller, or Safety PLC (no monitoring, automatic reset).

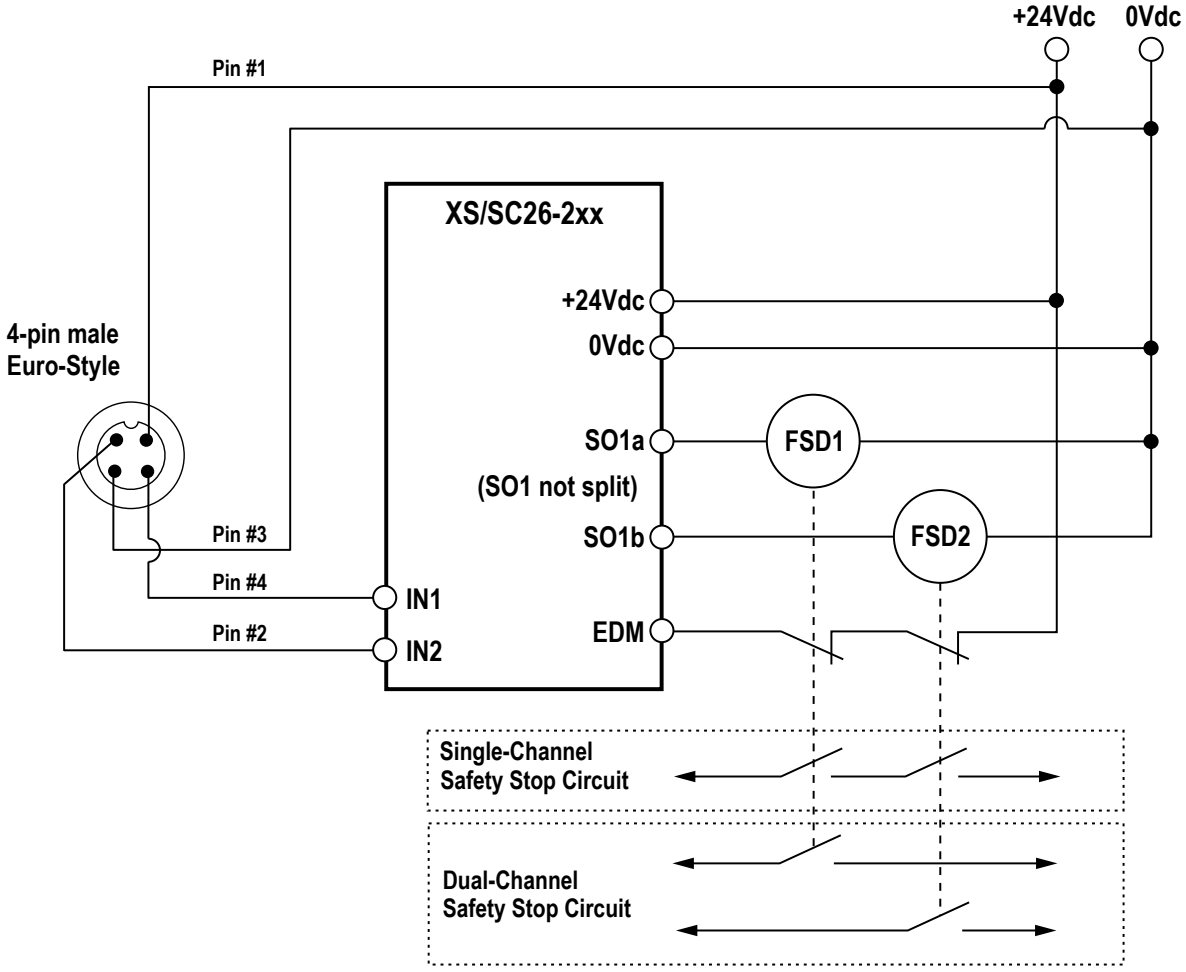

Mating QDE-5..D Cordset Pinout			M12 Connector (female face view)
Pin	Color	Receiver Function	
1	brown	+ 24 V dc	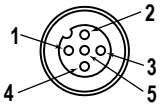
2	white	OSSD2	
3	blue	0 V dc	
4	black	OSSD1	
5	green/yellow	no connection	

6 System Operation

6.1 Security Protocol

Certain procedures for installing, maintaining, and operating the SLC4 must be performed by either Designated Persons or Qualified Persons.

A **Designated Person** is identified and designated in writing, by the employer, as being appropriately trained and qualified to perform system resets and the specified checkout procedures on the SLC4. The Designated Person is empowered to:

- Perform manual resets and hold possession of the reset key
- Perform the Daily Checkout Procedure

A **Qualified Person**, by possession of a recognized degree or certificate of professional training, or by extensive knowledge, training, and experience, has successfully demonstrated the ability to solve problems relating to the installation of the SLC4 System and its integration with the guarded machine. In addition to everything for which the Designated Person is empowered, the Qualified Person is empowered to:

- Install the SLC4 System
- Perform all checkout procedures
- Make changes to the internal configuration settings
- Reset the System following a Lockout condition

6.2 Normal Operation

6.2.1 System Power-Up

When power is applied, each sensor conducts self-tests to detect critical internal faults, determine configuration settings, and prepare the SLC4 for operation.

If either sensor detects a critical fault, scanning ceases, the receiver outputs remain Off and diagnostic information displays.

If no faults are detected, the SLC4 automatically enters Alignment mode, and the receiver looks for an optical sync pattern from the emitter.

If the receiver is aligned and receives the proper sync pattern, it enters Run mode and begins scanning to determine the blocked or clear status of each beam. No manual reset operation is required.

6.2.2 Run Mode

If any beams become blocked while the SLC4 is running, the receiver outputs turn Off within the stated SLC4 response time (see Specifications on page 43). If all the beams then become clear, the receiver outputs come back On. No resets are needed. All required machine control resets are provided by the machine control circuit.

Internal Faults (Lockouts): If either sensor detects a critical fault, scanning ceases, the receiver outputs turn Off and diagnostic information displays. See Troubleshooting on page 38 for resolution of error/fault conditions.

6.2.3 Emitter Indicators

A single bi-color red/green Status indicator shows whether power is applied, and whether the emitter is in Run mode or a Lockout condition.

Emitter Operating Status	Status Indicator
Power-up	Red on for several seconds
Run Mode	Green
Lockout	Flashing Red

6.2.4 Receiver Indicators

A single bi-color red/green Status indicator shows when the OSSD outputs are on (green) or off (red), or the System is in Lockout status (flashing red).

Bi-color red/green Zone indicators show whether a section of the defined area is aligned and clear, or is blocked and/or misaligned. All models have three Zone indicators, each of which indicates Blocked/Clear conditions for approximately 1/3 of the total light screen.

Operating Mode	Status Indicator	Zone Indicators [3]	OSSD Outputs
Power up	Red on for several seconds, then green on for 1 second	Red on for several seconds, then green on for 1 second	Off
Alignment mode - beam 1 blocked	Red	Zone 1 red, others off	Off
Alignment mode - beam 1 clear	Red	Red or green	Off
Run mode - clear	Green	All on green	On
Run mode - blocked	Red	Red or green	Off
Lockout	Flashing red	All off	Off

6.3 Periodic Checkout Requirements

To ensure continued reliable operation, the System must be checked out periodically. Banner Engineering highly recommends performing the System checkouts as described below. However, a Qualified Person should evaluate these recommendations, based on the specific application and the results of a machine risk assessment, to determine the appropriate content and frequency of checkouts.

At every shift change, power-up, and machine setup change, the Daily Checkout should be performed; this checkout may be performed by a Designated or Qualified Person.

Semi-annually, the System and its interface to the guarded machine should be thoroughly checked out; this checkout must be performed by a Qualified Person (see Schedule of Checkouts on page 42). A copy of these test results should be posted on or near the machine.

Whenever changes are made to the System (either a new configuration of the SLC4 System or changes to the machine), perform the Commissioning Checkout (see Commissioning Checkout on page 32).

Note: Verify Proper Operation

The SLC4 can operate as it is designed only if it and the guarded machine are operating properly, both separately and together. It is the user's responsibility to verify this, on a regular basis, as instructed in Schedule of Checkouts on page 42. Failure to correct such problems can result in an increased risk of harm.

Before the System is put back into service, verify that the SLC4 System and the guarded machine perform exactly as outlined in the checkout procedures and any problem(s) are found and corrected.

[3] If beam 1 is blocked, Zone indicators 2–3 will be Off, because beam 1 provides the synchronization signal for all the beams.

7 Troubleshooting

7.1 Lockout Conditions

A Lockout condition causes both SLC4 OSSD outputs to turn off or remain off, sending a stop signal to the guarded machine. Each sensor provides diagnostic error codes to identify the cause(s) of lockouts (see Troubleshooting on page 38).

The following tables indicate a sensor lockout condition:

Receiver Lockout Conditions	
Status indicator	Flashing Red
Zone indicators	See Receiver Error Codes on page 38

Emitter Lockout Conditions	
Status indicator	Flashing Red

To recover from a Lockout condition, correct all errors and cycle power to the device.

7.2 Receiver Error Codes

Indicators	Error Description	Cause of Error and Appropriate Action
	**Output Error** caused by: • one or both outputs being shorted to a power supply (high or low) • by shorting OSSD 1 to OSSD 2 • by an overload (greater than 0.3 A)	• Disconnect the OSSD loads and reset the receiver. • If the error clears, the problem is in the OSSD load(s) or in the load wiring. • If the error continues with no load connected, replace the receiver.
	**Receiver Error** occurs because of excessive electrical noise or an internal failure	• Perform a reset per Checkout Procedures: Shift and Daily Checkout Procedure. • If the error clears, perform a Daily Checkout procedure (per Checkout Procedures: Shift and Daily Checkout Procedure; Daily Checkout Card) and if the System checks out, resume operation. If the System fails the Daily Checkout procedure, replace the receiver. • Perform the Initial Checkout procedure (Initial Checkout Procedure on page 26). • If the error clears, check the external connections and configuration settings. • If the error continues, replace the receiver.

7.3 Electrical and Optical Noise

The SLC4 is designed and manufactured to be highly resistant to electrical and optical noise and to operate reliably in industrial settings. However, serious electrical and/or optical noise may cause a random nuisance trip.

In extreme electrical noise cases, a Lockout is possible. To minimize the effects of transitory noise, the SLC4 responds to noise only if the noise is detected on multiple consecutive scans. If random nuisance trips occur, check the following:

- Optical interference from adjacent light screens or other photoelectrics
- Sensor input or output wires routed too close to noisy wiring

7.3.1 Checking for Sources of Electrical Noise

All SLC4 wiring is low voltage; running these wires alongside power wires, motor/servo wires, or other high-voltage wiring can inject noise into the SLC4 System. It is good wiring practice (and may be required by code) to isolate SLC4 wires from high-voltage wires.

1. Use the Banner model BT-1 Beam Tracker Alignment Aid (see Accessories on page 44) to detect electrical transient spikes and surges.
2. Cover the lens of the BT-1 with electrical tape to block optical light from entering the receiver lens.
3. Press the RCV button on the BT-1 and position the Beam Tracker on the wires going to the SLC4 or any other nearby wires.
4. If the BT-1's indicator lights, check for sources of electrical noise and separate the SLC4 cordset from any high-voltage wiring, if applicable.

5. Install proper transient suppression across the load to reduce the noise.

7.3.2 Check for Sources of Optical Noise

1. Turn off the emitter or completely block the emitter.
2. Press the RCV button on the Banner BT-1 Beam Tracker Alignment Aid and move it across the full length of the receiver's sensing window to check for light at the receiver.
3. If the BT-1's indicator lights, check for emitted light from other sources (other safety light screens, grids or points, or standard photoelectric sensors).

8 Product Support and Maintenance

8.1 Cleaning

SLC4 components are constructed of polycarbonate and are rated IEC IP65. Clean components with mild detergent or window cleaner and a soft cloth. Avoid cleaners containing alcohol, as they may damage the polycarbonate housing.

8.2 Replacement Parts

Model	Description
STP-13	14 mm test piece for 14 mm resolution systems
STP-21	24 mm test piece for 24 mm resolution systems

8.3 Warranty Service

Contact Banner Engineering for troubleshooting of this device. **Do not attempt any repairs to this Banner device; it contains no field-replaceable parts or components.** If the device, device part, or device component is determined to be defective by a Banner Applications Engineer, they will advise you of Banner's RMA (Return Merchandise Authorization) procedure.



Important: If instructed to return the device, pack it with care. Damage that occurs in return shipping is not covered by warranty.

8.4 Manufacturing Date

Every SLC4 produced is marked with a code that defines the week and year of manufacture and manufacturing location. The code format (U.S. Standard format) is: **YYWWL**

- YY = Year of manufacture, 2 digits
- WW = Week of manufacture, 2 digits
- L = Banner-specific code, 1 digit

Example: 1809H = 2018, Week 9.

8.5 Disposal

Devices that are no longer in use should be disposed of according to the applicable national and local regulations.

8.6 Banner Engineering Corp Limited Warranty

Banner Engineering Corp. warrants its products to be free from defects in material and workmanship for one year following the date of shipment. Banner Engineering Corp. will repair or replace, free of charge, any product of its manufacture which, at the time it is returned to the factory, is found to have been defective during the warranty period. This warranty does not cover damage or liability for misuse, abuse, or the improper application or installation of the Banner product.

THIS LIMITED WARRANTY IS EXCLUSIVE AND IN LIEU OF ALL OTHER WARRANTIES WHETHER EXPRESS OR IMPLIED (INCLUDING, WITHOUT LIMITATION, ANY WARRANTY OF MERCHANTABILITY OR FITNESS FOR A PARTICULAR PURPOSE), AND WHETHER ARISING UNDER COURSE OF PERFORMANCE, COURSE OF DEALING OR TRADE USAGE.

This Warranty is exclusive and limited to repair or, at the discretion of Banner Engineering Corp., replacement. **IN NO EVENT SHALL BANNER ENGINEERING CORP. BE LIABLE TO BUYER OR ANY OTHER PERSON OR ENTITY FOR ANY EXTRA COSTS, EXPENSES, LOSSES, LOSS OF PROFITS, OR ANY INCIDENTAL, CONSEQUENTIAL OR SPECIAL DAMAGES RESULTING FROM ANY PRODUCT DEFECT OR FROM THE USE OR INABILITY TO USE THE PRODUCT, WHETHER ARISING IN CONTRACT OR WARRANTY, STATUTE, TORT, STRICT LIABILITY, NEGLIGENCE, OR OTHERWISE.**

Banner Engineering Corp. reserves the right to change, modify or improve the design of the product without assuming any obligations or liabilities relating to any product previously manufactured by Banner Engineering Corp. Any misuse, abuse, or improper application or installation of this product or use of the product for personal protection applications when the product is identified as not intended for such purposes will void the product warranty. Any modifications to this product without prior express approval by Banner Engineering Corp will void the product warranties. All specifications published in this document

are subject to change; Banner reserves the right to modify product specifications or update documentation at any time. Specifications and product information in English supersede that which is provided in any other language. For the most recent version of any documentation, refer to: www.bannerengineering.com.

For patent information, see www.bannerengineering.com/patents.

8.7 Contact Us

Banner Engineering Corp. headquarters is located at:

9714 Tenth Avenue North
Minneapolis, MN 55441, USA
Phone: + 1 888 373 6767

For worldwide locations and local representatives, visit www.bannerengineering.com.

9 Checkout Procedures

This section lists the schedule of checkout procedures and describes where each procedure is documented. Checkouts must be performed as described. Results should be recorded and kept in the appropriate place (for example, near the machine, and/or in a technical file).

Banner Engineering highly recommends performing the System checkouts as described. However, a qualified person (or team) should evaluate these generic recommendations considering their specific application and determine the appropriate frequency of checkouts. This will generally be determined by a risk assessment, such as the one contained in ANSI B11.0. The result of the risk assessment will drive the frequency and content of the periodic checkout procedures and must be followed.

9.1 Schedule of Checkouts

Checkout cards and this manual can be downloaded at http://www.bannerengineering.com.

Checkout Procedure	When to Perform	Where to Find the Procedure	Who Must Perform the Procedure
Trip Test	At Installation Any time the System, the guarded machine, or any part of the application is altered.	Conduct a Trip Test on page 28	Qualified Person
Commissioning Checkout	At Installation Whenever changes are made to the System (for example, either a new configuration of the SLC4 or changes to the guarded machine).	Commissioning Checkout on page 32	Qualified Person
Shift/Daily Checkout	At each shift change Machine setup change Whenever the System is powered up During continuous machine run periods, this checkout should be performed at intervals not to exceed 24 hours.	**Daily Checkout Card** (Banner p/n 204522) A copy of the checkout results should be recorded and kept in the appropriate place (for example, near or on the machine, in the machine's technical file).	Designated Person or Qualified Person
Semi-Annual Checkout	Every six months following System installation, or whenever changes are made to the System (either a new configuration of the SLC4 or changes to the machine).	**Semi-Annual Checkout Card** (Banner p/n 204523) A copy of the checkout results should be recorded and kept in the appropriate place (for example, near or on the machine, in the machine's technical file).	Qualified Person

10 Specifications

10.1 General Specifications

Short Circuit Protection
All inputs and outputs are protected from short circuits to +24 V DC or DC common

Electrical Safety Class
III (per IEC 61140: 1997)

Safety Ratings
Type 4 per IEC 61496-1, -2
Category 4 PL e per EN ISO13849-1
SIL3 per IEC 61508; SIL CL3 per IEC 62061
PFHd (1/hr) = 9.81×10^{-9}
Mission Time (T_M) = 20 years (EN ISO 13849-1)

Effective Aperture Angle (EAA)
Meets Type 4 requirements per IEC 61496-2

Environmental Rating
IEC IP65

Shock and Vibration
Components have passed vibration and shock tests according to IEC 61496-1. This includes vibration (20 sweeps) of 10-55 Hz at 0.35 mm (0.014 in) single amplitude (0.70 mm peak-to-peak) and shock of 10 g for 16 milliseconds (6,000 cycles).

Operating Conditions
–20 °C to +55 °C (–4 °F to +131°F)
95% maximum relative humidity (non-condensing)

Storage Temperature
–30 °C to +65 °C (–22 °F to +149 °F)

Resolution
14 mm or 24 mm, depending on model

Operating Range
0.1 m to 2 m (4 in to 6.5 ft); range decreases with use of mirrors
Glass-surface mirrors: Approx 8% less range per mirror; see the specific mirror datasheet for more information.

Enclosure
Polycarbonate housing with well-sealed polycarbonate end-caps

Mounting Hardware
All mounting hardware is ordered separately.
See Mounting Brackets on page 48 for mounting bracket options.

Cables and Connections
See Accessories on page 44 for recommended cables. If other cables are used with the SLC4, the user must verify suitability of these cables for each application.

Certifications

10.2 Emitter Specifications

Supply Voltage at the Device
24 V DC ±15% (use a SELV-rated power supply according to EN IEC 60950). The external voltage supply must be capable of buffering brief mains interruptions of 20 ms, as specified in IEC/EN 60204-1.

Status Indicators
One bi-color (Red/Green) Status Indicator: indicates operating mode, lockout or power Off condition

Supply Current
35 mA maximum

Residual Ripple
± 10% maximum

Wavelength of Emitter Elements
Infrared LEDs, 860 nm at peak emission

10.3 Receiver Specifications

Supply Voltage at the Device
24 V DC ±15% (use a SELV-rated power supply according to EN IEC 60950). The external voltage supply must be capable of buffering brief mains interruptions of 20 ms, as specified in IEC/EN 60204-1.

Residual Ripple
±10% maximum

Supply Current (no load)
65 mA maximum, exclusive of OSSD1 and OSSD2 loads (up to additional 0.3 A each)

Response Time
Dependent on the number of sensing beams; see the models table for the number of beams and response time.

Recovery Time
Blocked to Clear (OSSDs Off to On; varies with total number of sensing beams and whether Sync beam is blocked): 60 ms to 300 ms

Ambient Light Immunity
>10,000 lux at 5° angle of incidence

Strobe Light Immunity
Totally immune to one Federal Signal Corp. "Fireball" model FB2PST strobe

Output Signal Switching Devices (OSSDs)
Two redundant solid-state 24 V dc, 0.3 A max. sourcing OSSD (Output Signal Switching Device) safety outputs.
ON-State voltage: ≥ Vin-1.5 V DC
OFF-State voltage: 0 V dc typical, 1 V dc maximum (no load)
OFF-State, maximum allowed external voltage: 1.5 V dc [4]
Maximum load capacitance: 1.0 µF
Maximum leakage current: 50 µA (with open 0 V)
OSSD test pulse width: 200 microseconds typical
OSSD test pulse period: 200 ms typical
Switching current: 0 to 0.3 A
Maximum cable resistance to load: 5 ohms per wire

Status Indicators
Bi-color (red/green) Status indicator: indicates general system and output status
Bi-color (red/green) Zone Status indicators: indicate condition (clear or blocked beam) of a defined group of beams

[4] The maximum voltage allowed on the OSSDs in the OFF-state without a lockout occurring. This voltage may occur, for example, from the input structure of a safety relay module connected to the SLC4 OSSDs.

11 Accessories

11.1 Cordsets

Machine interface cordsets provide power to the first emitter/receiver pair.

QDE-5..D 5-pin M12/Euro-style QD to flying lead cordsets. These cordsets have a M12/Euro-style QD connector on one end and are unterminated (cut to length) on the other end to interface with guarded machine. PVC jacketed overmold and cables.

Model	Length	Banner Cordset Pinout/Color Code				M12 Connector (female face view)
		Pin	Color	Emitter Function	Receiver Function	
QDE-515D	4.5 m (15 ft)	1	Brown	+24 V dc	+24 V dc	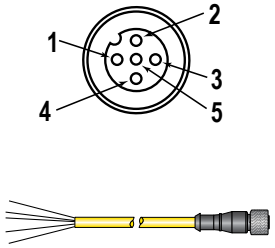
QDE-525D	7.6 m (25 ft)	2	White	no connection	OSSD2	
QDE-550D	15.2 m (50 ft)	3	Blue	0 V dc	0 V dc	
QDE-575D	22.8 m (75 ft)	4	Black	no connection	OSSD1	
QDE-5100D	30.4 m (100 ft)	5	Gn/Ye	no connection	no connection	

Splitter cordsets are used for easy interconnection between an SLC4 receiver and its emitter, providing a single “homerun” cable. Model DEE2R-.. double-ended cordsets may be used to extend the QD trunk or either branch. (Branch #1 and branch #2 cable sections are 300 mm/1 ft long.)

Model QDE-5..D single-ended cordsets may be used to extend the QD trunk for cut-to-length applications.

The 5-pin splitter cordsets allow for an easy interconnection between the receiver and emitter, and provide a single trunk cable for the optional interchangeable ("swapable") connection.

5-Pin Threaded M12 Splitter Cordsets with Flat Junction—Double Ended

Model	Trunk (Male)	Branches (Female)	Pinout (Male)	Pinout (Female)
CSB-M1251M1251	0.3 m (0.98 ft)	2 x 0.3 m (0.98 ft)	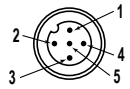	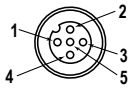
CSB-M1258M1251	2.44 m (8 ft)			
CSB-M12515M1251	4.57 m (15 ft)			
CSB-M12525M1251	7.62 m (25 ft)			
CSB-UNT525M1251	7.62 m (25 ft) Unterminated			
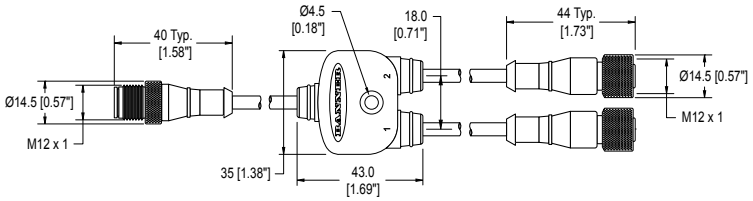			1 = Brown 2 = White 3 = Blue	4 = Black 5 = Green/Yellow

DEE2R-5..D 5-pin M12/Euro-style QD to M12/Euro-style QD (female-male) cordsets—Use the DEE2R-5... cordsets to extend the length of cordsets and directly connect to other devices with a 5-pin M12/Euro-style quick disconnect. Other lengths are available.

Model	Length	Banner Cordset Pinout/Color Code	M12 Connector (female face view)
DEE2R-51D	0.3 m (1 ft)		
DEE2R-53D	0.9 m (3 ft)		
DEE2R-58D	2.5 m (8 ft)		
DEE2R-515D	4.6 m (15 ft)		
DEE2R-525D	7.6 m (25 ft)		
DEE2R-550D	15.2 m (50 ft)		
DEE2R-575D	22.9 m (75 ft)		
DEE2R-5100D	30.5 m (100 ft)		

Pin	Color	Emitter Function	Receiver Function
1	Brown	+24 V dc	+24 V dc
2	White	no connection	OSSD2
3	Blue	0 V dc	0 V dc
4	Black	no connection	OSSD1
5	Gn/Ye	no connection	no connection

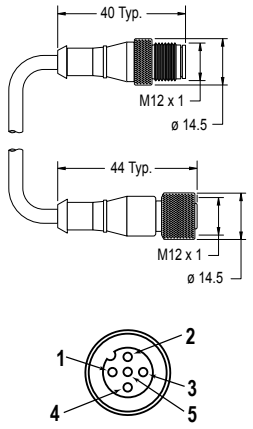

11.2 Safety Controllers

Safety Controllers provide a fully configurable, software-based safety logic solution for monitoring safety and non-safety devices.

For additional models and XS26 expansion modules, see instruction manual p/n 174868 (XS/SC26-2).

Table 4: Safety controller models

Non-Expandable Models	Expandable Models	Description
SC26-2	**XS26-2**	26 convertible I/O and 2 Redundant Solid State Safety Outputs
SC26-2d	**XS26-2d**	26 convertible I/O and 2 Redundant Solid State Safety Outputs with Display
SC26-2e	**XS26-2e**	26 convertible I/O and 2 Redundant Solid State Safety Outputs with Ethernet
SC26-2de	**XS26-2de**	26 convertible I/O and 2 Redundant Solid State Safety Outputs with Display and Ethernet
SC10-2roe		10 Inputs, 2 redundant relay safety outputs (3 contacts each) (ISD and Ethernet compatible)

11.3 Universal (Input) Safety Modules

UM-FA-xA Safety Modules are safety monitoring devices that provide forced-guided, mechanically-linked relay (safety) outputs for the SLC4 system.

See datasheet p/n 141249 for more information.

Model	Description
UM-FA-9A	3 normally open (N.O.) redundant-output 6 amp contacts
UM-FA-11A	2 normally open (N.O.) redundant-output 6 amp contacts, plus 1 normally closed (N.C.) auxiliary contact

11.4 Muting Module

Provides the muting capability for the SLC4.

See Banner manual 116390 for more information and additional cabling options.

Model	Description	
MMD-TA-11B	DIN-mount Muting module	2 N.O. safety outputs (6 amps), 2 or 4 muting inputs, SSI, override input; IP20; terminal connections
MMD-TA-12B		2 OSSD outputs, 2 or 4 muting inputs, SSI, override input; IP20; terminal connections

11.5 Two-Color Indicators for the SLC4

Provides clear, 360° indication of the SLC4 receiver's output status. Use with a CSB splitter cable and optional DEE2R double-ended cables.

See datasheet p/n 207535 for more information.



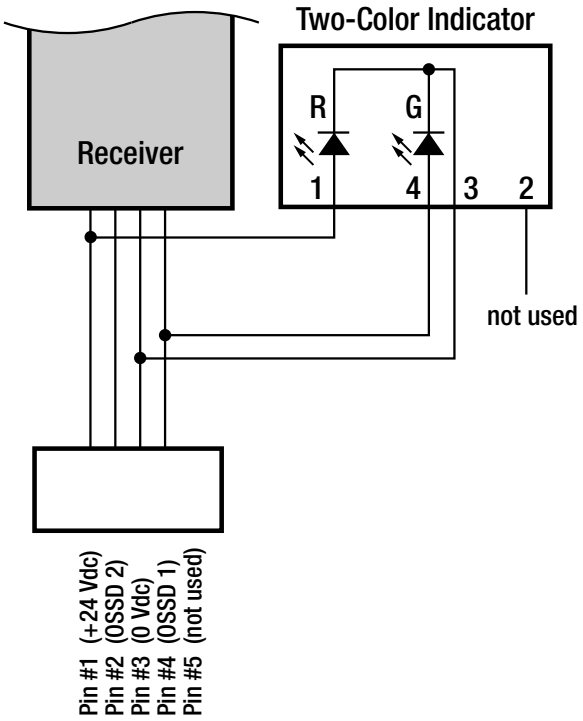

Models		Construction	Connector/LED Fuction/Inputs
	**T8LRGX7PQP**	Polycarbonate/ABS alloy housing, thermoplastic diffuser; Fully encapsulated IP67	4-pin M12/Euro-style Integral QD (requires a mating cable) Red/Green indication follows OSSD output of the receiver: Red: OSSDs Off (Beam blocked or lockout) Green—OSSDs on PNP (Sourcing)
	**M18RGX7PQ**	Nickel-plated brass housing, M18x1 thread; thermoplastic lens; Fully encapsulated IP67	
	**T30RGX7PQ**	Thermoplastic polyester housing, thermoplastic lens; Fully encapsulated IP67	
	**K30LRGX7PQ**	Polycarbonate housing, 30 mm thermoplastic dome, 22 mm base mount; Fully encapsulated, IP67	
	**K50LRGX7PQ**	Polycarbonate housing, 50 mm thermoplastic dome, 30 mm base mount; Fully encapsulated, IP67	
	**K80LRGX7PQ**	Polycarbonate housing, 50 mm thermoplastic dome, flat or DIN mount; Encapsulated electronics, IP67	

11.6 In-Line Sensor Status Indicator

The S15LRGPQ provides in-line sensor status indication of the output status of the SLC4 receiver.

See datasheet p/n 212217 for more information.



- Connects in line with receiver cable
- Translucent white PUR body
- Fully encapsulated IP66, IP67, and IP68 body

11.7 MSM Series Corner Mirrors

- Compact for light-duty applications
- Rear-surface glass mirrors are rated at 85% efficiency. The total sensing range decreases by approximately 8% per mirror. See mirror data sheet p/n 43685 or http://www.bannerengineering.com for further information.
- Mounting brackets may be inverted from the positions shown (flanges pointing "inward" instead of "outward," as shown). When this is done, dimension L1 decreases by 57 mm.
- MSAMB adapter bracket kit included with each MSA stand.

Mirror Model	Defined Area Length	Reflective Area Y	Mounting L1	Mounting L2
MSM8A	150 mm (5.9 in)	267 mm (10.5 in)	323 mm (12.7 in)	292 mm (11.5 in)
MSM12A	300 mm (11.8 in)	356 mm (14 in)	411 mm (16.2 in)	381 mm (15 in)
MSM20A	450 mm (17.7 in)	559 mm (22 in)	615 mm (24.2 in)	584 mm (23 in)

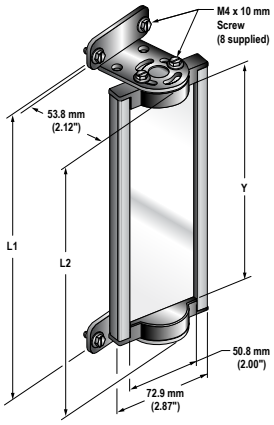

11.8 SSM Series Corner Mirrors

- Robust for heavy-duty applications
- Extra wide for use with long-range optical safety systems
- Rear-surface glass mirrors are rated at 85% efficiency. The total sensing range decreases by approximately 8% per mirror. See mirror datasheet p/n 61934 or www.bannerengineering.com for further information.
- Stainless steel reflective surface models are also available. See datasheet p/n 67200.
- Robust construction, two mounting brackets and hardware included.
- EZA-MBK-2 adapter bracket is required for use with MSA Series stand, refer to the mounting bracket accessories list.
- Brackets may be inverted from the positions shown, decreasing dimension L1 by 58 mm (2.3 in).

Mirror Model	Defined Area Length	Reflective Area Y	Mounting 1	Mounting L2
SSM-200	150 mm (5.9 in)	200 mm (7.9 in)	278 mm (10.9 in)	311 mm (12.2 in)
SSM-375	300 mm (11.8 in)	375 mm (14.8 in)	486 mm (19.1 in)	453 mm (17.8 in)
SSM-550	450 mm (17.7 in)	550 mm (21.7 in)	661 mm (26.0 in)	628 mm (24.7 in)

To order the stainless steel reflective surface models, add model number suffix "**-S**" (for example, **SSM-375-S**); range reduction for these models is approximately 30% per mirror. See datasheet p/n 67200.

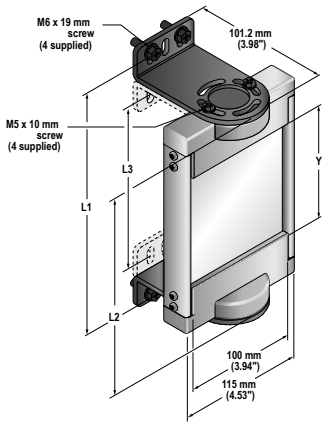

11.9 Mounting Brackets

See Mounting System Components on page 20 for installation information.

Model	Description	
SLC4A-MBK-12	• Side-mount bracket • ±15° rotation • Glass-filled polycarbonate • Includes two brackets	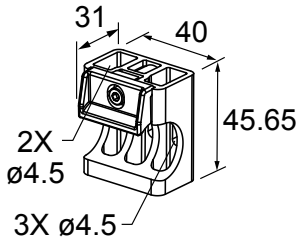
SLC4A-MBK-11	• End-mount bracket • Glass-filled polycarbonate • Includes four brackets	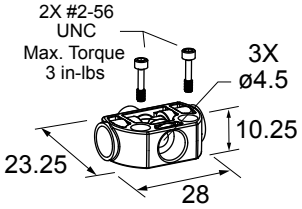
SLC4A-MBK-10	• End-mount bracket • ±20 degrees rotation • 14 gauge cold rolled steel • Includes four brackets • Hardware to secure to mounting surface supplied by the user	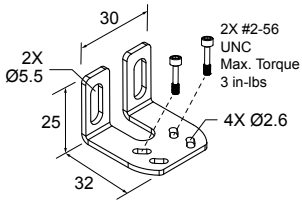

11.10 Literature

The following documentation is supplied with each SLC4 Safety Light Curtain receiver.

Additional copies are available at no charge; contact Banner Engineering or visit www.bannerengineering.com.

Part Number	Description
204371	SLC4 Safety Light Curtain Instruction Manual
204522	Daily Checkout Procedure Card

Part Number	Description
204523	Semi-Annual Checkout Procedure Card

12 Glossary

A

ANSI (American National Standards Institute)

Acronym for the American National Standards Institute, an association of industry representatives that develops technical standards (including safety standards). These standards comprise a consensus from a variety of industries on good practice and design. ANSI standards relevant to application of safety products include the ANSI B11 Series, and ANSI/RIA R15.06. See Standards and Regulations on page 5.

Auto Power-Up

A safety light curtain system feature that enables the system to be powered up into Run mode (or recover from a power interruption) without requiring a manual reset.

B

Blanking

A programmable feature of a safety light curtain system which allows the light curtain to ignore certain objects located within the defined area. See **Floating Blanking** and **Reduced Resolution**.

Blocked Condition

A condition that occurs when an opaque object of sufficient size blocks/interrupts one or more light curtain beams. When a blocked condition occurs, OSSD1 and OSSD2 outputs simultaneously turn off within the system response time.

Brake

A mechanism for stopping, slowing, or preventing motion.

C

Cascade

Series connection (or "daisy-chaining") of multiple emitters and receivers.

CE

Abbreviation for "Conformité Européenne" (French translation of "European Conformity"). The CE mark on a product or machine establishes its compliance with all relevant European Union (EU) Directives and the associated safety standards.

Clutch

A mechanism that, when engaged, transmits torque to impart motion from a driving member to a driven member.

Control Reliability

A method of ensuring the performance integrity of a control system or device. Control circuits are designed and constructed so that a single failure or fault within the system does not prevent the normal stopping action from being applied to the machine when required, or does not create unintended machine action, but does prevent initiation of successive machine action until the failure is corrected.

CSA

Abbreviation for Canadian Standards Association, a testing agency similar to Underwriters Laboratories, Inc. (UL) in the United States. A CSA-certified product has been type-tested and approved by the Canadian Standards Association as meeting electrical and safety codes.

D

Defined Area

The "screen of light" generated by a safety light curtain system, defined by the height and the safety distance (minimum distance) of the system.

Designated Person

A person or persons identified and designated in writing, by the employer, as being appropriately trained and qualified to perform a specified checkout procedure.

E

Emitter

The light-emitting component of a safety light curtain system, consisting of a row of synchronized modulated LEDs. The emitter, together with the receiver (placed opposite), creates a "screen of light" called the defined area.

External Device Monitoring (EDM)

A means by which a safety device (such as a safety light curtain) actively monitors the state (or status) of external devices that may be controlled by the safety device. A lockout of the safety device will result if an unsafe state is detected in the external device. External device(s) may include, but are not limited to: MPCEs, captive contact relays/contactors, and safety modules.

F

Failure to Danger

A failure which delays or prevents a machine safety system from arresting dangerous machine motion, thereby increasing risk to personnel.

Final Switching Device (FSD)

The component of the machine's safety-related control system that interrupts the circuit to the machine primary control element (MPCE) when the output signal switching device (OSSD) goes to the OFF-state.

Fixed Blanking

A programming feature that allows a safety light curtain system to ignore objects (such as brackets or fixtures) which will always be present at a specific location within the defined area. The presence of these objects will not cause the system's safety outputs (for example, Final Switching Devices) to trip or latch. If any fixed objects are moved within or removed from the defined area, a Lockout condition results.

Floating Blanking

See **Reduced Resolution**.

FMEA (Failure Mode and Effects Analysis)

A testing procedure by which potential failure modes in a system are analyzed to determine their results or effects on the system. Component failure modes that produce either no effect or a Lockout condition are permitted; failures which cause an unsafe condition (a failure to danger) are not. Banner safety products are extensively FMEA tested.

G

Guarded Machine

The machine whose point of operation is guarded by the safety system.

H

Hard (Fixed) Guard

Screens, bars, or other mechanical barriers affixed to the frame of the machine intended to prevent entry by personnel into the hazardous area(s) of a machine, while allowing the point of operation to be viewed. The maximum size of the openings is determined by the applicable standard, such as Table O-10 of OSHA 29CFR1910.217, also called a "fixed barrier guard."

Harm

Physical injury or damage to the health of people, which may result through direct interaction with the machine or through indirect means, as a result of damage to property or to the environment.

Hazard Point

The closest reachable point of the hazardous area.

Hazardous Area

An area that poses an immediate or impending physical hazard.

I

Internal Lockout

A Lockout condition that is due to an internal safety system problem. Generally, indicated by the red Status indicator LED (only) flashing. Requires the attention of a Qualified Person.

K

Key Reset (Manual Reset)

A key-operated switch used to reset a safety light curtain system to Run mode following a Lockout condition, or to enable machine operation following a Manual Start/Restart (Latch) condition. Also refers to the act of using the switch.

L

Manual Start/Restart (Latch) Condition

The safety outputs of a safety light curtain system turn off when an object completely blocks a beam. In a Manual Start/Restart condition, the safety outputs stay off when the object is removed from the defined area. To re-energize the outputs, perform a proper manual reset.

Lockout Condition

A safety light curtain condition that is automatically attained in response to certain failure signals (an internal lockout). When a Lockout condition occurs, the safety light curtain's safety outputs turn OFF; the failure must be corrected and a manual reset is required to return the system to Run mode.

M

Machine Primary Control Element (MPCE)

An electrically powered element, external to the safety system, which directly controls the machine's normal operating motion in such a way that the element is last (in time) to operate when machine motion is either initiated or arrested.

Machine Response Time

The time between the activation of a machine stopping device and the instant when the dangerous parts of the machine reach a safe state by being brought to rest.

Minimum Object Sensitivity (MOS)

The minimum-diameter object that a safety light curtain system can reliably detect. Objects of this diameter or greater will be detected anywhere in the defined area. A smaller object can pass undetected through the light if it passes exactly midway between two adjacent light beams. Also known as MODS (Minimum Object Detection Size). See also **Specified Test Piece**.

Muting

The automatic suspension of the safeguarding function of a safety device during a non-hazardous portion of the machine cycle.

O

OFF State

The state in which the output circuit is interrupted and does not permit the flow of current.

ON State

The state in which the output circuit is complete and permits the flow of current.

OSHA (Occupational Safety and Health Administration)

A U.S. Federal agency, Division of the U.S. Department of Labor, that is responsible for the regulation of workplace safety.

OSSD

Output Signal Switching Device. The safety outputs that are used to initiate a stop signal.

P

Part-Revolution Clutch

A type of clutch that may be engaged or disengaged during the machine cycle. Part-revolution clutched machines use a clutch/brake mechanism, which can arrest machine motion at any point in the stroke or cycle.

Pass-Through Hazard

A pass-through hazard is associated with applications where personnel may pass through a safeguard (which issues a stop command to remove the hazard), and then continues into the guarded area, such as in perimeter guarding. Subsequently, their presence is no longer detected, and the related danger becomes the unexpected start or restart of the machine while personnel are within the guarded area.

Point of Operation

The location of a machine where material or a workpiece is positioned and a machine function is performed upon it.

PSDI (Presence-Sensing Device Initiation)

An application in which a presence-sensing device is used to actually start the cycle of a machine. In a typical situation, an operator manually positions a part in the machine for the operation. When the operator moves out of the danger area, the presence sensing device starts the machine (no start switch is used). The machine cycle runs to completion, and the operator can then insert a new part and start another cycle. The presence sensing device continually guards the machine. Single-break mode is used when the part is automatically ejected after the machine operation. Double-break mode is used when the part is both inserted (to begin the operation) and removed (after the operation) by the operator. PSDI is commonly confused with "Trip Initiate." PSDI is defined in OSHA CFR1910.217. Banner safety light curtain systems may not be used as PSDI devices on mechanical power presses, per OSHA regulation 29 CFR 1910.217.

Q

Qualified Person

A person who, by possession of a recognized degree or certificate of professional training, or who, by extensive knowledge, training and experience, has successfully demonstrated the ability to solve problems relating to the subject matter and work.

R

Receiver

The light-receiving component of a safety light curtain system, consisting of a row of synchronized phototransistors. The receiver, together with the emitter (placed opposite), creates a "screen of light" called the defined area.

Reduced Resolution

A feature that allows a safety light curtain system to be configured to produce an intentionally disabled light beam(s) within the light curtain, which increases the minimum object sensitivity. The disabled beam(s) appears to move up and down (float) to allow the feeding of an object through the defined area at any point without tripping the safety outputs (for example, OSSDs) and causing a Auto Start/Restart (Trip) or Manual Start/Restart (Latch) condition. Sometimes called Floating Blanking.

Reset

The use of a manually operated switch to restore the safety outputs to the On state from a lockout or a Manual Start/Restart (Latch) condition.

Resolution

See **Minimum Object Sensitivity**.

S

Self-Checking (Circuitry)

A circuit with the capability to electronically verify that all of its own critical circuit components, along with their redundant backups, are operating properly. Banner safety light curtain systems and safety modules are self-checking.

Safety Distance

The minimum distance required to allow the machine's hazardous motion to stop completely, before a hand (or other object) can reach the nearest hazard point. Measured from the midpoint of the defined area to the nearest hazard point. Factors that influence minimum separation distance include the machine stop time, the light curtain system response time, and the light curtain minimum object detection size.

Specified Test Piece

An opaque object of sufficient size used to block a light beam to test the operation of a safety light curtain system. When inserted into the defined area and placed in front of a beam, the test piece causes the outputs to de-energize.

Supplemental Guarding

Additional safeguarding device(s) or hard guarding, used to prevent a person from reaching over, under, through or around the primary safeguard or otherwise accessing the guarded hazard.

T

Test Piece

An opaque object of sufficient size used to block a light beam to test the operation of a safety light curtain system.

Auto Start/Restart (Trip) Condition

The safety outputs of a safety light curtain system turn off when an object completely blocks a beam. In an Auto Start/Restart condition, the safety outputs re-energize when the object is removed from the defined area.

Auto Start/Restart (Trip) Initiate

The resetting of a safeguard causing the initiation of machine motion or operation. Auto Start/Restart Initiate is not allowed as a means to initiate a machine cycle per NFPA 79 and ISO 60204-1, and is commonly confused with PSDI.

U

UL (Underwriters Laboratory)

A third-party organization that tests products for compliance with appropriate standards, electrical codes, and safety codes. Compliance is indicated by the UL listing mark on the product.

Index

A

accessories
    muting module 45
applications
    appropriate 9, 10
applications and limitation 9, 10

E

EDM 30
external device monitoring (EDM) 30

I

installation
    mechanical 12–22, 24

M

muting module
    accessories 45

O

OSSD 30
output signal switching device (OSSD) 30