MULTI-BEAM® 3- and 4-wire Diffuse Mode Scanner Blocks

Datasheet

For MULTI-BEAM modular photoelectric sensors

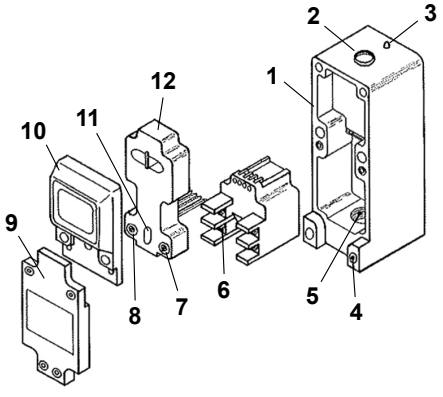

1. Scanner block housing
2. Sensitivity adjustment
3. Status/alignment indicator LED
4. Mounting hole
5. Conduit entrance
6. Wiring terminals on the power block
7. Logic timing adjustment
8. Logic timing adjustment
9. Lower cover, supplied with the scanner block
10. Upper cover (lens), supplied with the scanner block
11. Light/dark operate select
12. Logic module

MULTI-BEAM modular components (scanner block, power block, and logic module) are all purchased separately.

WARNING:

- **Do not use this device for personnel protection**
- Using this device for personnel protection could result in serious injury or death.
- This device does not include the self-checking redundant circuitry necessary to allow its use in personnel safety applications. A device failure or malfunction can cause either an energized (on) or de-energized (off) output condition.

Models

Models	Specifications	Application	Description
SBD1	**Range:** 30 cm (12 in) **Response:** 1 ms on/off **Beam:** infrared, 940 nm	Short Range, Fast Response	The SBD1 model is a short range diffuse mode sensor with a relatively wide field of view. It loses gain rapidly near the end of its range. As a result, its response to background objects is suppressed. Use caution when applying any diffuse mode sensor if background reflectivity exceeds the reflectivity of the object to be sensed.
SBDL1	**Range:** 60 cm (24 in) **Response:** 1 ms on/off **Beam:** infrared, 940 nm	Intermediate Range, Fast Response	The SBDL1 model has a longer range than SBD1, but with less response to objects passing the sensor at close range, and greater sensitivity to background objects. Models SBD1 and SBDL1 are identical except for their upper cover (lens) assembly (SBD1 uses UC-D; SBDLI uses UC-L).
SBDX1	**Range:** 2 m (6 ft) **Response:** 10 ms on/off **Beam:** infrared, 880 nm	Long Range, for Low-Reflectivity Objects	The SBDX1 model is used for diffuse (proximity) mode applications when there is no requirement for less than 10 ms response and where there are no background objects to falsely return light. The SBX1 has a high excess gain for reliable detection of most materials with low reflectivity which pass within 10 in (25 cm) of the sensor.
SBDX1MD	**Range:** 60 cm (24 in) **Response:** 10 ms on/off **Beam:** infrared, 880 nm	Wide Beam Angle for Clear Objects	The SBDX1MD model has a wide beam angle for forgiving alignment to shiny objects and provides detection of clear or translucent glass or plastics. It has high excess gain at close range, with fast fall-off of gain near the maximum sensing distance for optical suppression of reflective background. This model may be created from model SBDX1 by substituting upper cover (lens) model UC-DMB.

Overview

A Banner MULTI-BEAM Sensor is a compact modular self-contained photoelectric switch consisting of three components: a scanner block, a power block, and a logic module.

The **scanner** block comprises the housing for the sensor and contains a complete modulated photoelectric amplifier, the emitter and receiver optoelements and lenses, and space for the other modules.

The **power** block module provides the interface between the scanner block and the external circuit. It contains a power supply for the MULTI-BEAM plus a switching device (except in emitter-only power blocks) to interface the sensor to the circuit to be controlled.

The **logic** module interconnects the power block and scanner block both electrically and mechanically. It provides the desired timing logic function (if any) plus the ability to program the output for either light- or dark-operate.

Original Document
03495 Rev. C

8 July 2022

03495

ПРОМЭЛЕКТРОНИКА/ sales@prom-elec.com

The emitters of MULTI-BEAM opposed mode emitter/receiver pairs do not require a logic module. Emitter scanner blocks are supplied with a blade-pin to interconnect the scanner block and power block. Power block and logic modules are purchased separately. This modular design, with field-replaceable power block and logic modules, permits a large variety of sensor configurations, resulting in exactly the right sensor for any photoelectric application.

Scanner Blocks

Diffuse mode MULTI-BEAMs combine emitter and receiver into one unit. Some of the emitted light, which is directed toward the object being sensed, returns to the receiver. Diffuse mode sensing is useful for presence sensing applications such as web break detection, ejected part detection, jam detection, open flap detection, and fill level detection of loosely packed products. Care must be taken to avoid sensing background objects: always verify that the distance to the nearest background object is at least three times the distance from the sensor to the object to be sensed. For example, if a product passes one inch from a diffuse sensor, the nearest background object should be at least three inches further away.

MULTI-BEAM 3- and 4-wire diffuse mode scanner blocks offer four different models. The high power model (those with 10 millisecond response time) offer the greatest optical sensing power of any industrial diffuse mode sensor.

The circuitry of all MULTI-BEAM components is encapsulated within rugged, corrosion-resistant PBT polyester housings that meet or exceed NEMA 1, 3, 12, and 13 ratings. MULTI-BEAM 3- and 4-wire diffuse mode scanner blocks include Banner's exclusive, patented Alignment Indicating Device (AID™) system, which lights a top-mounted LED when the sensor sees its modulated light source and pulses at a rate proportional to the strength of the received light signal.

All MULTI-BEAM scanner blocks are totally solid-state for unlimited life.

Figure 1. Functional Schematic

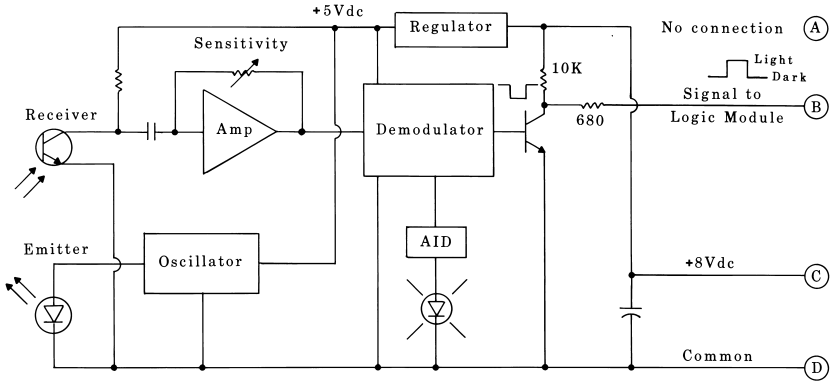

Installation and Alignment

Diffuse mode photoelectric sensing is useful for sensing the presence of almost any reflective object or material, and is used for sensing transparent or translucent materials when the distance from the sensor to the material is not fixed. A common example of this latter type of application is clear web-break detection when web flutter is uncontrolled.

Ranges for diffuse sensors are always specified using a white test card. Objects with less reflectivity produce shorter sensing ranges or less excess gain at a given range (see table below). Size may also be important: given two objects of the same reflectivity, a large object may return more light to the sensor than a smaller object.

Table 1: Relative Reflectivity Table

Material	Reflectivity (%)	Excess Gain Required
Kodak white test card	90%	1
White aper	80%	1.1
Newspaper (with print)	55%	1.6
Tissue paper: 2 ply	47%	1.9
1 ply	35%	2.6
Masking tape	75%	1.2
Kraft paper, cardboard	70%	1.3
Dimension lumber (pine, dry, clean)	75%	1.2
Rough wood pallet (clean)	20%	4.5
Beer foam	70%	1.3
Clear plastic bottle [1]	40%	2.3

[1] For materials with shiny or glossy surfaces, the reflectivity figure represents the maximum light return, with the scanner beam exactly perpendicular to the material surface.

Material	Reflectivity (%)	Excess Gain Required
Translucent (brown) plastic bottle [1]	60%	1.5
Opaque white plastic [1]	87%	1.0
Opaque black plastic (nylon) [1]	14%	6.4
Black neoprene	4%	22.5
Black foam carpet backing	2%	45
Black rubber tire wall	1.5%	60
Natural aluminum, unfinished [1]	140%	0.6
Natural aluminum, straightlined [1]	105%	0.9
Black anodized aluminum, unfinished [1]	115%	0.8
Black anodized aluminum, straightlined [1]	50%	1.8
Stainless steel, microfinish [1]	400%	0.2
Stainless steel, brushed [1]	120%	0.8

Successful diffuse mode sensing depends upon adequate optical contrast between the object being sensed and the background behind the object. This means that the greater the difference between light reflected from the object and light reflected from the background, the more reliable diffuse mode sensing will be.

Most problems in diffuse mode sensing arise because of backgrounds which return as much, or nearly as much, light to the sensor as does the object to be sensed. In general, this problem is solved by using as dark a background as possible and by placing the background as far behind the object as possible. There is a general rule which states that the object-to-background distance should be at least three times the sensor-to-object distance.

Shiny materials usually require close control of the scanning angle to maximize the amount of reflected light actually returned to the sensor. The sensor should be mounted so that the sensing beam is exactly perpendicular to the object's surface.

Figure 2. Minimum Distance to Background - Diffuse Mode Sensors

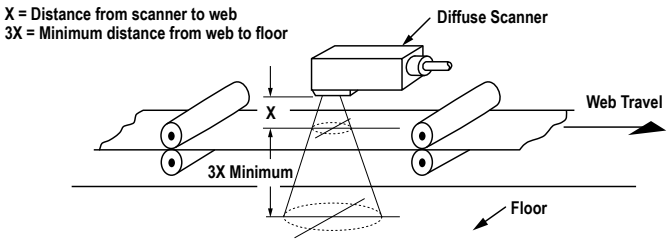

Proper operation of diffuse mode sensors requires that they be mounted securely and aligned properly. Excessive movement or vibration could result in intermittent or false operation caused by loss of alignment to the object being sensed. Banner offers a variety of 2- and 3-axis mounting brackets for use with MULTI-BEAM sensors. See the Banner product catalog for bracket information.

Banner's Alignment Indicating Device (AID™) System

Banner's Alignment Indicating Device (AID) system [2] is an exclusive built-in feature that permits optimum alignment and continuous minoring of the photoelectric system. The red receiver LED indicator is on when the receiver sees the modulated light from the emitter and is off when the beam is broken. In addition, a low frequency pulse rate is superimposed on the LED indicator. When alignment is marginal, the pulse rate will be about once per second (indicating an excess gain of 1). As alignment is improved, the pulse rate increases, indicating increased excess gain. Optimum sensor alignment is indicated by the fastest pulse rate.

The AID feature also tells you when maintenance is necessary. Any pulse rate less than two per second indicates marginal performance; the unit, however, is still functioning properly. When the pulse rate slows to less than two per second, clean the lenses and check the alignment.

Aligning the Sensor

The Alignment Indicating Device (AID) system LED on the top of the sensor is used in the following alignment procedure:

1. Begin with the sensor at the desired distance from the object and at the approximate position where it will be mounted.

   The background (behind the object to be detected) should be as far behind the object as possible, and of as dark a color as possible compared to the object to be detected. Ideally, the object should present its largest reflective surface to the sensor.
2. Apply power to the MULTI-BEAM power block (terminals #1 and #2; observe polarity on DC models).
3. With the object to be detected in place, adjust the position of the MULTI-BEAM relative to the object to produce the fastest LED alignment indicator pulse rate.

   If the LED appears to be on steadily, it is actually pulsing at a rate too fast to be seen. Being able to detect a change in the pulse rate when the sensor's position is changed will allow accurate alignment.

[2] U.S. Patent 4356393

a) Slow the pulsing to a countable rate by reducing the sensitivity (counterclockwise rotation of the adjustment).

4. Turn the sensor's SENSITIVITY control to the fully clockwise position.

   This is a 15-turn control, clutched at both ends.

5. Remove the object from the sensing position.
   a) If the alignment indicator LED turns off, check operation by alternately placing the object in position and removing it. The LED should follow the action by turning on when the object is present and turning off when the object is removed. If this occurs, then the alignment is complete.

Note: A steady on condition of the LED with the object present is the best situation, but this may not always be possible to achieve, especially if the object to be detected is of low reflectivity.

6. If the alignment indicator remains on when the object is removed, the MULTI-BEAM is receiving false light returned from a background surface.
   a) Reduce the sensitivity (counterclockwise rotation of the adjustment) until the alignment indicator LED turns off, plus two more full arms.
   b) Place the object in position and check that the alignment indicator LED turns on. (Repeat step #5, above.)

Note: If, in step #6, the LED does not turn on when the object is placed in position, the sensor is receiving as much or more light energy from the background as from the object. In this situation, consider the following alternatives:

- Move the sensor closer to the object and reduce sensitivity (not possible with model SBDL1 - see excess gain curve).
- Reduce background reflectivity by painting the background with a flat black paint, cutting a hole through it, scuffing its surface, etc.
- If the background surface is shiny, tilt the sensor (or the background surface) in any direction so that the beam is not perpendicular to the background surface.
- Evaluate other sensing methods, such as convergent beam or ultrasonic proximity sensing.

7. Secure the MULTI-BEAM in position and complete the wiring by connecting the load to the output circuit of the power block (terminal #3 and/or #4).

   Refer to the hookup information for the power block in use.

8. Check operation of the load by alternately placing an object in front of the lens and then removing it.
9. Adjust the logic module timing (if any), as required.

Note: Logic modules (except models LM1, LM2, and LM10) include a light/dark operate programming jumper. Removing the jumper will invert the output state of the power block (from normally open to normally closed or vice versa).



CAUTION: Do not attempt to remove the programming jumper while power is applied to the MULTI-BEAM!

MULTI-BEAM Scanner Block Modifications

The following are common modifications to MULTI-BEAM 3- and 4-wire scanner blocks. They are not stocked, but are available on a quote basis.

Zero Hysteresis Modification "MZ". Amplifier hysteresis may be removed from 3- and 4-wire scanner blocks when attempting to sense very small signal changes (contrasts less than 3). This modification is designated by adding suffix "MZ" (modified zero hysteresis). Verify all variables affecting the sensor's optical response remain constant before ordering the zero hysteresis modification.

High Speed Modification "MHS". Scanner blocks with 1 millisecond response may be modified for 300 microsecond (0.3 ms) response. This modification is designated by adding suffix "MHS" to the scanner block model number (for example, SBD1MHS). The MHS modification reduces the available excess gain by about 50% and also decreases the sensor's immunity to some forms of electrical noise.

Troubleshooting

Symptom	Probable Cause	Correction
Alignment indicator never turns on, and output never switches the load.	Sensitivity is too low.	Turn sensitivity control clockwise to increase gain.
	Object to be sensed is outside the MULTI-BEAM's field of view.	Follow alignment procedure.
	Loose connection.	Check power supply at power block terminals #1 and #2.
	Failure of a sensor component.	Test MULTI-BEAM using Banner model LMT. Replace failed module.
Alignment indicator never turns on, but load is switched correctly.	Broken alignment indicator LED (sensor will continue to operate).	Replace scanner block (if alignment indicator is required).

Symptom	Probable Cause	Correction
Alignment indicator is always on, and output never switches.	False light returned by background object.	Turn sensitivity control counterclockwise to decrease gain. Angle the sensor if background is shiny. Use model with a shorter focus range.
	Optical crosstalk from broken lens.	Turn sensitivity control counterclockwise to decrease gain. Angle the sensor if background is shiny. Use model with a shorter sensing range.
	Failure of sensor component.	Test MULTI-BEAM using Banner model LMT. Replace failed module.
Alignment indicator follows the sensing action, normally, but the output is energized all of the time.	Output of power block failed (shorted).	Replace power block module. Check load demand against power block switch rating.
Alignment indicator follows the sensing action, normally, but the output never energizes.	Failure of logic module or power block.	Test MULTI-BEAM using Banner model LMT. Replace failed module.
	Loose connection.	Check wires to load.
Sensitivity cannot be set to sense the difference between the light and dark conditions. The sensitivity is either too high or too low.	Low optical contrast (less than 2:1).	Re-position the MULTI-BEAM and follow alignment procedure. Increase difference in reflectivity between the light and dark conditions (for example, drill hole through background). Evaluate alternative sensing methods.

Specifications

Supply Voltage
Input power and output connections are made via 3- and 4-wire power blocks. See datasheet 03499 (DC power blocks) or 03501 (AC power blocks), or refer to the Banner product catalog.

Response Time
1 millisecond on and off
High-gain models (-X model suffix) 10 milliseconds on and off
Independent of signal strength

Repeatability of Response
0.3 milliseconds (1.5 milliseconds for -X models)
Independent of signal strength

Sensitivity Adjustment
Easily-accessible, located on top of scanner block beneath O-ring gasketed nylon screw cover
15-turn clutched control
Rotate clockwise to increase sensitivity

Alignment Indicator
Red LED on top of scanner block. Banner's exclusive, patented Alignment Indicating Device (AID™) circuit lights the LED whenever the sensor detects its own modulated light source, and pulses the LED at a rate proportional to the received light level

Construction
Reinforced PBT polyester housing; components totally encapsulated. Stainless steel.

Environmental Rating
Meets NEMA 1, NEMA 3, NEMA 12, and NEMA 13

Operating Temperature
–40 °C to +70 °C (–40 °F to +158 °F)

Dimensions

All measurements are listed in millimeters [inches], unless noted otherwise.

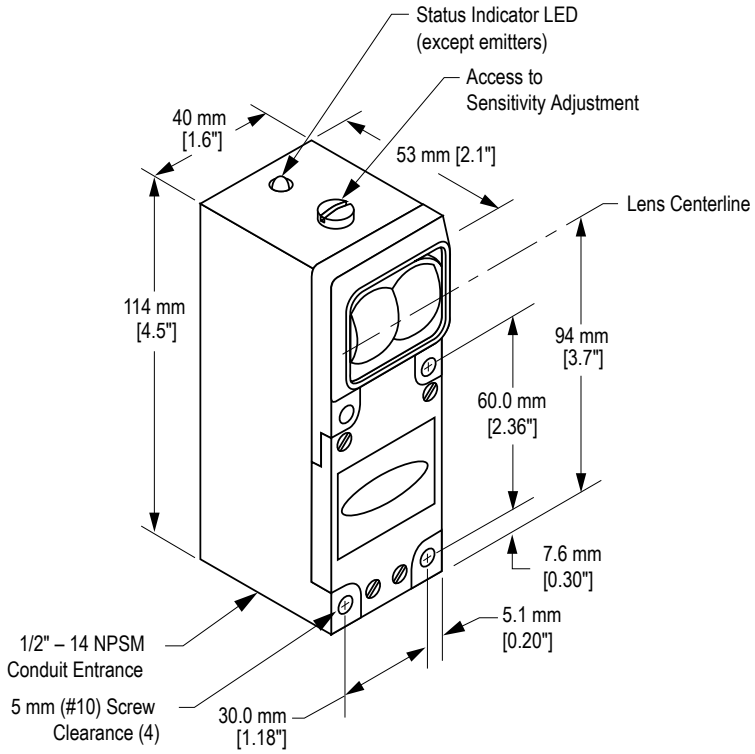

Performance Curves

Figure 3. Excess Gain - SBD1

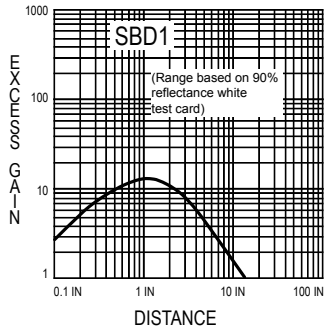

Figure 4. Beam Pattern - SBD1

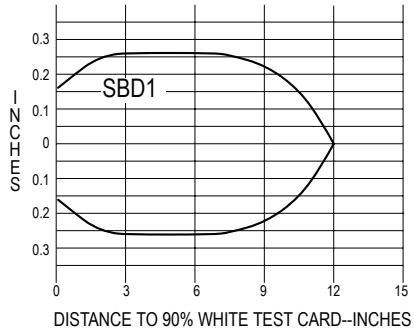

Figure 5. Excess Gain - SBDL1

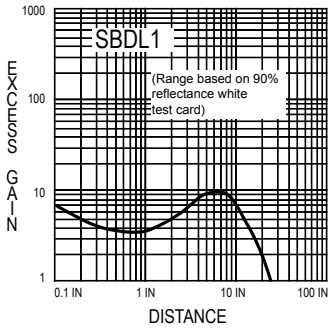

Figure 6. Beam Pattern - SBDL1

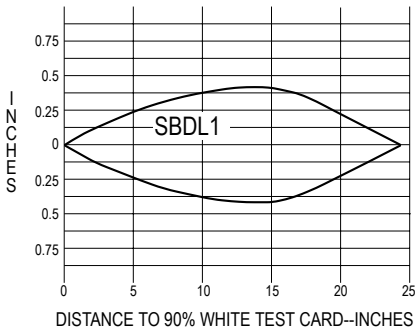

Figure 7. Excess Gain - SBDX1

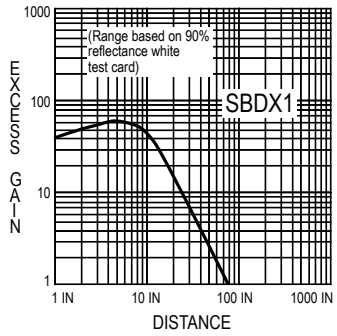

Figure 8. Beam Pattern - SBDX1



Figure 9. Excess Gain - SBDX1MD

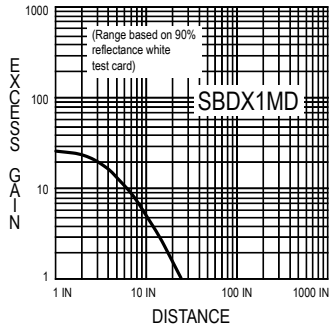

Figure 10. Beam Pattern - SBDX1MD



Banner Engineering Corp Limited Warranty

Banner Engineering Corp. warrants its products to be free from defects in material and workmanship for one year following the date of shipment. Banner Engineering Corp. will repair or replace, free of charge, any product of its manufacture which, at the time it is returned to the factory, is found to have been defective during the warranty period. This warranty does not cover damage or liability for misuse, abuse, or the improper application or installation of the Banner product.

THIS LIMITED WARRANTY IS EXCLUSIVE AND IN LIEU OF ALL OTHER WARRANTIES WHETHER EXPRESS OR IMPLIED (INCLUDING, WITHOUT LIMITATION, ANY WARRANTY OF MERCHANTABILITY OR FITNESS FOR A PARTICULAR PURPOSE), AND WHETHER ARISING UNDER COURSE OF PERFORMANCE, COURSE OF DEALING OR TRADE USAGE.

This Warranty is exclusive and limited to repair or, at the discretion of Banner Engineering Corp., replacement. **IN NO EVENT SHALL BANNER ENGINEERING CORP. BE LIABLE TO BUYER OR ANY OTHER PERSON OR ENTITY FOR ANY EXTRA COSTS, EXPENSES, LOSSES, LOSS OF PROFITS, OR ANY INCIDENTAL, CONSEQUENTIAL OR SPECIAL DAMAGES RESULTING FROM ANY PRODUCT DEFECT OR FROM THE USE OR INABILITY TO USE THE PRODUCT, WHETHER ARISING IN CONTRACT OR WARRANTY, STATUTE, TORT, STRICT LIABILITY, NEGLIGENCE, OR OTHERWISE.**

Banner Engineering Corp. reserves the right to change, modify or improve the design of the product without assuming any obligations or liabilities relating to any product previously manufactured by Banner Engineering Corp. Any misuse, abuse, or improper application or installation of this product or use of the product for personal protection applications when the product is identified as not intended for such purposes will void the product warranty. Any modifications to this product without prior express approval by Banner Engineering Corp will void the product warranties. All specifications published in this document are subject to change; Banner reserves the right to modify product specifications or update documentation at any time. Specifications and product information in English supersede that which is provided in any other language. For the most recent version of any documentation, refer to: www.bannerengineering.com.

For patent information, see www.bannerengineering.com/patents.

© Banner Engineering Corp. All rights reserved