

S15L Pro In-Line Indicator with Modbus® Product Manual

Original Instructions
p/n: 235708 Rev. B
20-Aug-25
© Banner Engineering Corp. All rights reserved. www.bannerengineering.com

ПРОМЭЛЕКТРОНИКА/ sales@prom-elec.com

Contents

Chapter 1 Features 3
Models 3

Chapter 2 Wiring 4

Chapter 3 Modbus Register Map 5

Chapter 4 Specifications 9
FCC Part 15 Class B for Unintentional Radiators 10
Industry Canada ICES-003(B) 10
Dimensions 11

Chapter 5 Accessories 12
Cordsets 12
Brackets 13
Quick-Disconnect Cap 13

Chapter 6 Product Support and Maintenance 14
Clean with Mild Detergent and Warm Water 14
Repairs 14
Contact Us 14
Banner Engineering Corp Limited Warranty 14

© Banner Engineering Corp. All rights reserved. www.bannerengineering.com

Chapter Contents

Models 3

Chapter 1 Features

15 mm Multicolor RGB Indicator



- Bright, programmable indicator light with RGB LEDs
- Rugged overmolded indicator segment design meets IP65, IP67 and IP68
- Connect directly to a compatible sensor or anywhere in the Modbus network for easy visual indication
- Modbus® gives full access to color, flashing, and intensity settings

Models

Model	Housing	Style	Control	Connector
S15LPSQ	S15	Pro	Serial Modbus RS-485	Integral 4-pin M12 male/female quick-disconnect connector

© Banner Engineering Corp. All rights reserved.
www.bannerengineering.com

Chapter Contents

Chapter 2 Wiring

4-pin M12 Male	4-pin M12 Female	Pin	Wire Color	Description
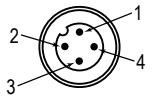	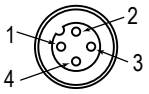	1	Brown	12 V DC to 30 V DC
		3	Blue	DC Common
		4	Black	RS-485 (-)
		2	White	RS-485 (+)

© Banner Engineering Corp. All rights reserved.
www.bannerengineering.com

Chapter Contents

Chapter 3 Modbus Register Map

Holding Registers for Device Information

Address without Offset	Address with Offset	Description	Holding Register Representation	Default Value	Saved	Access
1000	1001	Low word model number	Example: 0x0002A734 (hex) = 173876 (dec) High word = 0x0002 Low word = 0xA734	See Device	Yes	RO
1001	1002	High word model number			Yes	RO
1002	1003	Model version (BCD)		See Device	Yes	RO
1003-1018	1004-1019	Model name, string		S15L Pro Indicator with Modbus	Yes	RO
1019	1020	Low word configuration number	Example: 0x00016D43 (hex) = 93507 (dec) High word = 0x0002 Low word = 0xA734	See Device	Yes	RO
1020	1021	High word configuration number			Yes	RO
1021	1022	Configuration version (BCD)		See Device	Yes	RO
1022-1037	1023-1038	Serial number/date code, string		See Device	Yes	RO
1038-1053	1039-1054	Serial number, string		See Device	Yes	RO

Holding Registers to Configure Operation Mode

Address without Offset	Address with Offset	Description	Holding Register Representation	Default Value	Saved	Access
3200	3201	Operation Mode	0 = Normal Mode 1 = Demo Mode	0	No	RW

Holding Registers to Configure Normal Mode

Address without Offset	Address with Offset	Description	Holding Register Representation	Default Value	Saved	Access
3300	3301	Animation	0 = Off 1 = Steady 2 = Flash 3 = Two Color Flash 4 = Reserved 5 = Reserved 6 = Reserved 7 = Intensity Sweep 8 = Two Color Sweep	0	No	RW
3301	3302	Reserved	0	0	No	RW

Continued on page 6

© Banner Engineering Corp. All rights reserved.
www.bannerengineering.com

Continued from page 5

Address without Offset	Address with Offset	Description	Holding Register Representation	Default Value	Saved	Access
3302	3303	Pulse Pattern	0 = Normal 1 = Strobe 2 = Three Pulse 3 = SOS 4 = Random	0	No	RW
3303	3304	Speed	0 = Slow 1 = Medium 2 = Fast 3 = Custom Flash Rate	0	No	RW
3304	3305	Reserved	0	0	No	RW
3305	3306	Reserved	0	0	No	RW
3306	3307	Reserved	0	0	No	RW
3307	3308	Reserved	0	0	No	RW
3308	3309	Reserved	0	0	No	RW
3309	3310	Reserved	0	0	No	RW
3310	3311	Color 1	0 = Green 1 = Red 2 = Orange 3 = Amber 4 = Yellow 5 = Lime Green 6 = Spring Green 7 = Cyan 8 = Sky Blue 9 = Blue 10 = Violet 11 = Magenta 12 = Rose 13 = White 14 = Custom 1 15 = Custom 2	0	No	RW
3311	3312	Color 1 Intensity	0 = High 1 = Medium 2 = Low 3 = Off 4 = Custom	0	No	RW

Continued on page 7

© Banner Engineering Corp. All rights reserved.
www.bannerengineering.com

Continued from page 6

Address without Offset	Address with Offset	Description	Holding Register Representation	Default Value	Saved	Access
3312	3313	Color 2	0 = Green 1 = Red 2 = Orange 3 = Amber 4 = Yellow 5 = Lime Green 6 = Spring Green 7 = Cyan 8 = Sky Blue 9 = Blue 10 = Violet 11 = Magenta 12 = Rose 13 = White 14 = Custom 1 15 = Custom 2	0	No	RW
3313	3314	Color 2 Intensity	0 = High 1 = Medium 2 = Low 3 = Off 4 = Custom	0	No	RW

Holding Registers to Configure Custom Settings

Address without Offset	Address with Offset	Description	Holding Register Representation	Default Value	Saved	Access
3400	3401	Custom Color 1 Green, Custom Color 1 Red	0-255, 0-255 (Two 8-bit numbers)	0	No	RW
3401	3402	Custom Color 1 Blue	0-255	0	No	RW
3410	3411	Custom Color 2 Green, Custom Color 2 Red	0-255, 0-255 (Two 8-bit numbers)	0	No	RW
3411	3412	Custom Color 2 Blue	0-255	0	No	RW
3420	3421	Custom Intensity	0-100	100	No	RW
3421	3422	Custom Speed	5-255	15	No	RW
3422	3423	Restrict To Gamut	0 = Off 1 = On	0	No	RW

Holding Registers to Restore Factory Defaults

Address without Offset	Address with Offset	Description	Holding Register Representation	Default Value	Saved	Access
6600	6601	Restore factory defaults	0 = Disabled 1 - 65335 = Enable	0	No	RW
6601	6602	Restore factory defaults key 1	43690(0xAAAA) = Enable	0	No	RW
6602	6603	Restore factory defaults key 2	21845(0x5555) = Enable	0	No	RW

© Banner Engineering Corp. All rights reserved.
www.bannerengineering.com

Holding Registers to Configure Modbus Communication

Address without Offset	Address with Offset	Description	Holding Register Representation	Default Value	Saved	Access
6100	6101	Device ID: the Modbus individual node ID	1-247	1	Yes	RW
6101	6102	Baud rate	12 = 1200 24 = 2400 48 = 4800 96 = 9600 192 = 19200	192	Yes	RW
6102	6103	Parity	0 = None 1 = Odd 2 = Even	0	Yes	RW
6103	6104	Stop Bits	1 = 1 2 = 2 3 = 1.5	1	Yes	RW

© Banner Engineering Corp. All rights reserved.
www.bannerengineering.com

Chapter Contents

FCC Part 15 Class B for Unintentional Radiators 10
Industry Canada ICES-003(B)..... 10
Dimensions..... 11

Chapter 4 Specifications

Supply Voltage

12 V DC to 30 V DC

Supply Current

60 mA maximum current at 12 V DC

35 mA typical at 24 V DC

Supply Protection Circuitry

Protected against reverse polarity and transient voltages

Operating Conditions

–40 °C to +45 °C (–40 °F to +113 °F)

Humidity: 90% at +50 °C maximum relative humidity (non-condensing)

Storage Temperature: –40 °C to +70 °C (–40 °F to +158 °F)

Environmental Rating

IP65, IP67, IP68, UL Type 1

Construction

Coupling Material: Nickel-plated brass

Connector Body: PVC diffuse white

Vibration and Mechanical Shock

Meets IEC 60068-2-6 requirements (Vibration: 10 Hz to 55 Hz, 0.5 mm amplitude, 5 minutes sweep, 30 minutes dwell)

Meets IEC 60068-2-27 requirements (Shock: 15G 11 ms duration, half sine wave)

Connections

Integral 4-pin M12 male/female quick-disconnect connector

Models with a quick disconnect require a mating cordset

Required Overcurrent Protection

WARNING: Electrical connections must be made by qualified personnel in accordance with local and national electrical codes and regulations.

Overcurrent protection is required to be provided by end product application per the supplied table.

Overcurrent protection may be provided with external fusing or via Current Limiting, Class 2 Power Supply.

Supply wiring leads < 24 AWG shall not be spliced.

For additional product support, go to www.bannerengineering.com.

Supply Wiring (AWG)	Required Overcurrent Protection (A)	Supply Wiring (AWG)	Required Overcurrent Protection (A)
20	5.0	26	1.0
22	3.0	28	0.8
24	2.0	30	0.5

Certifications

Banner Engineering BV
Park Lane, Culliganlaan 2F bus 3
1831 Diegem, BELGIUM

Turck Banner LTD Blenheim House
Blenheim Court
Wickford, Essex SS11 8YT
GREAT BRITAIN

© Banner Engineering Corp. All rights reserved.
www.bannerengineering.com

Default Indicator Characteristics

Color	Dominant Wavelength (nm) or Color Temperature (CCT)	Color Coordinates[1]		Lumen Output (Typical at 25 °C)
		x	y	
White	7000K	0.31	0.295	1.16
Green	527	0.175	0.7	1.8
Red	620	0.69	0.307	1.3
Orange	604	0.628	0.356	1.35
Amber	597	0.593	0.383	1.35
Yellow	588	0.537	0.426	1.35
Lime Green	577	0.466	0.481	1.8
Spring Green	513	0.178	0.562	1.6
Cyan	498	0.195	0.396	1.3
Sky Blue	489	0.17	0.303	1.1
Blue	465	0.144	0.055	0.25
Violet	-	0.337	0.144	0.7
Magenta	-	0.506	0.251	1
Rose	-	0.593	0.282	1.1

FCC Part 15 Class B for Unintentional Radiators

(Part 15.105(b)) This equipment has been tested and found to comply with the limits for a Class B digital device, pursuant to part 15 of the FCC Rules. These limits are designed to provide reasonable protection against harmful interference in a residential installation. This equipment generates, uses, and can radiate radio frequency energy and, if not installed and used in accordance with the instructions, may cause harmful interference to radio communications. However, there is no guarantee that interference will not occur in a particular installation. If this equipment does cause harmful interference to radio or television reception, which can be determined by turning the equipment off and on, the user is encouraged to try to correct the interference by one or more of the following measures:

- Reorient or relocate the receiving antenna.
- Increase the separation between the equipment and receiver.
- Connect the equipment into an outlet on a circuit different from that to which the receiver is connected.
- Consult the dealer or an experienced radio/TV technician for help.

(Part 15.21) Any changes or modifications not expressly approved by the party responsible for compliance could void the user’s authority to operate this equipment.

Industry Canada ICES-003(B)

This device complies with CAN ICES-3 (B)/NMB-3(B). Operation is subject to the following two conditions: 1) This device may not cause harmful interference; and 2) This device must accept any interference received, including interference that may cause undesired operation.

Cet appareil est conforme à la norme NMB-3(B). Le fonctionnement est soumis aux deux conditions suivantes : (1) ce dispositif ne peut pas occasionner d'interférences, et (2) il doit tolérer toute interférence, y compris celles susceptibles de provoquer un fonctionnement non souhaité du dispositif.

[1] Refer to the CIE 1931 (x,y) Chromaticity Diagram to show equivalent color with indicated color coordinates. Actual coordinates may differ ± 5%.

© Banner Engineering Corp. All rights reserved.

Dimensions

All measurements are listed in millimeters [inches], unless noted otherwise. The measurements provided are subject to change.

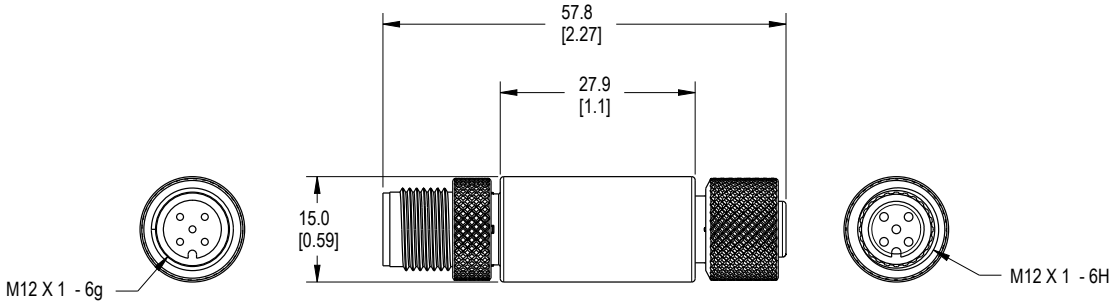

© Banner Engineering Corp. All rights reserved.
www.bannerengineering.com

Chapter Contents

Cordsets 12
Brackets 13
Quick-Disconnect Cap 13

Chapter 5 Accessories

Cordsets

4-pin Single-Ended M12 Female Cordsets				
Model	**Length**	**Dimensions (mm)**	**Pinout (Female)**	
BC-M12F4-22-1	1 m (3.28 ft)	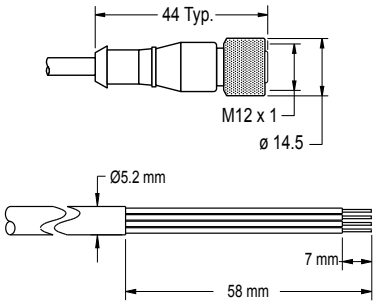	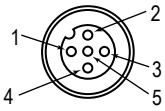	1 = Brown 2 = White 3 = Blue 4 = Black 5 = Unused
BC-M12F4-22-2	2 m (6.56 ft)			
BC-M12F4-22-5	5 m (16.4 ft)			
BC-M12F4-22-8	8 m (26.25 ft)			
BC-M12F4-22-10	10 m (30.81 ft)			
BC-M12F4-22-15	15 m (49.2 ft)			
BC-M12F4-22-20	20 m (65.61 ft)			
BC-M12F4-22-25	25 m (82.02 ft)			
BC-M12F4-22-30	30 m (98.42 ft)			

4-pin Single-Ended M12 Female Right-Angle Cordsets				
Model	**Length**	**Dimensions (mm)**	**Pinout (Female)**	
BC-M12F4A-22-1	1 m (3.28 ft)	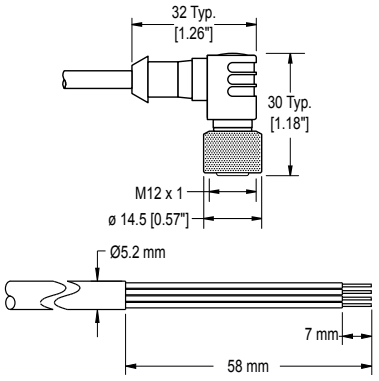	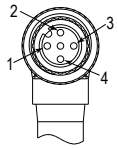	1 = Brown 2 = White 3 = Blue 4 = Black 5 = Unused
BC-M12F4A-22-2	2 m (6.56 ft)			
BC-M12F4A-22-5	5 m (16.4 ft)			
BC-M12F4A-22-8	8 m (26.25 ft)			
BC-M12F4A-22-10	10 m (30.81 ft)			
BC-M12F4A-22-15	15 m (49.2 ft)			

4-pin A-Code Double-Ended M12 Female to M12 Male Cordsets				
Model	**Length**	**Dimensions (mm)**	**Pinouts**	
BC-M12F4-M12M4-22-1	1 m (3.28 ft)	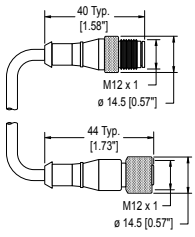	Female 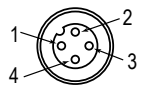 Male 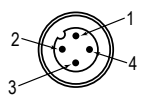	1 = Brown 2 = White 3 = Blue 4 = Black
BC-M12F4-M12M4-22-2	2 m (6.56 ft)			
BC-M12F4-M12M4-22-3	3 m (9.84 ft)			
BC-M12F4-M12M4-22-4	4 m (13.12 ft)			
BC-M12F4-M12M4-22-5	5 m (16.4 ft)			
BC-M12F4-M12M4-22-10	10 m (30.81 ft)			
BC-M12F4-M12M4-22-15	15 m (49.2 ft)			

© Banner Engineering Corp. All rights reserved.
www.bannerengineering.com

Brackets

LMBM12MAG
- Attaches to M12 cordset end
- Black polypropylene
- 11.8 kg (26 lb) pull force
- One piece

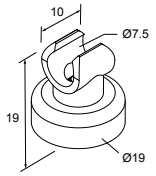

LMBM12SP
- Attaches to M12 cordset end
- Black polypropylene
- Supplied with thread-forming hardware
- Pack of seven

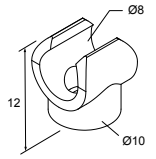

LMBS15MAG
- Attaches to S15 housing
- White polypropylene
- 11.8 kg (26 lb) pull force
- One piece

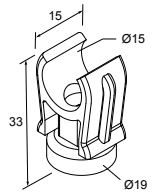

LMBS15SP
- Attaches to S15 housing
- White polypropylene
- Clearance for M5 or #10 hardware
- Pack of five

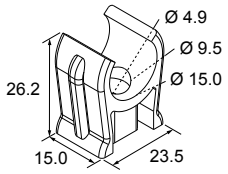

Quick-Disconnect Cap

ACC-CAP M12-10
- 10 Caps
- Seal and protect exposed, unterminated M12 quick-disconnect connectors



© Banner Engineering Corp. All rights reserved.
www.bannerengineering.com

Chapter Contents

Clean with Mild Detergent and Warm Water 14
Repairs 14
Contact Us 14
Banner Engineering Corp Limited Warranty 14

Chapter 6 Product Support and Maintenance

Clean with Mild Detergent and Warm Water

Wipe down the device with a soft cloth dampened with a mild detergent and warm water solution. Do not use any other chemicals for cleaning.

Repairs

Contact Banner Engineering for troubleshooting of this device. **Do not attempt any repairs to this Banner device; it contains no field-replaceable parts or components.** If the device, device part, or device component is determined to be defective by a Banner Applications Engineer, they will advise you of Banner's RMA (Return Merchandise Authorization) procedure.

> **IMPORTANT:** If instructed to return the device, pack it with care. Damage that occurs in return shipping is not covered by warranty.

Contact Us

Banner Engineering Corp. | 9714 Tenth Avenue North | Plymouth, MN 55441, USA | Phone: + 1 888 373 6767

For worldwide locations and local representatives, visit www.bannerengineering.com.

Banner Engineering Corp Limited Warranty

Banner Engineering Corp. warrants its products to be free from defects in material and workmanship for one year following the date of shipment. Banner Engineering Corp. will repair or replace, free of charge, any product of its manufacture which, at the time it is returned to the factory, is found to have been defective during the warranty period. This warranty does not cover damage or liability for misuse, abuse, or the improper application or installation of the Banner product.

THIS LIMITED WARRANTY IS EXCLUSIVE AND IN LIEU OF ALL OTHER WARRANTIES WHETHER EXPRESS OR IMPLIED (INCLUDING, WITHOUT LIMITATION, ANY WARRANTY OF MERCHANTABILITY OR FITNESS FOR A PARTICULAR PURPOSE), AND WHETHER ARISING UNDER COURSE OF PERFORMANCE, COURSE OF DEALING OR TRADE USAGE.

This Warranty is exclusive and limited to repair or, at the discretion of Banner Engineering Corp., replacement. **IN NO EVENT SHALL BANNER ENGINEERING CORP. BE LIABLE TO BUYER OR ANY OTHER PERSON OR ENTITY FOR ANY EXTRA COSTS, EXPENSES, LOSSES, LOSS OF PROFITS, OR ANY INCIDENTAL, CONSEQUENTIAL OR SPECIAL DAMAGES RESULTING FROM ANY PRODUCT DEFECT OR FROM THE USE OR INABILITY TO USE THE PRODUCT, WHETHER ARISING IN CONTRACT OR WARRANTY, STATUTE, TORT, STRICT LIABILITY, NEGLIGENCE, OR OTHERWISE.**

Banner Engineering Corp. reserves the right to change, modify or improve the design of the product without assuming any obligations or liabilities relating to any product previously manufactured by Banner Engineering Corp. Any misuse, abuse, or improper application or installation of this product or use of the product for personal protection applications when the product is identified as not intended for such purposes will void the product warranty. Any modifications to this product without prior express approval by Banner Engineering Corp will void the product warranties. All specifications published in this document are subject to change; Banner reserves the right to modify product specifications or update documentation at any time. Specifications and product information in English supersede that which is provided in any other language. For the most recent version of any documentation, refer to: www.bannerengineering.com.

For patent information, see www.bannerengineering.com/patents.

© Banner Engineering Corp. All rights reserved.
www.bannerengineering.com

LinkedIn

X (formerly Twitter)

Facebook



© 2025. All rights reserved.
www.bannerengineering.com