4-pin Single-Ended Mini Female and Male Cordsets

Features

- Mini female or male to flying leads, depending on the model
- Multiple length options
- Black PVC jacket, unshielded, 7/8"-16UNF Mini straight or right-angle connector
- ITC/PLTC rated cable

Models

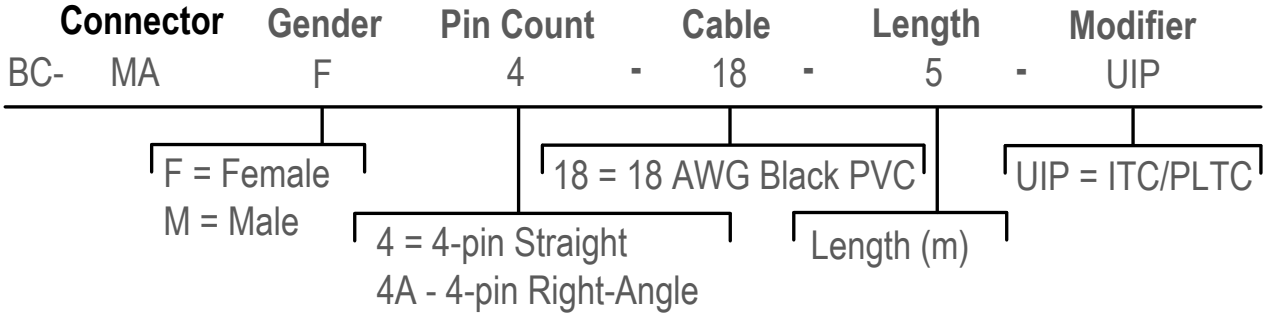

Single-Ended Mini Female

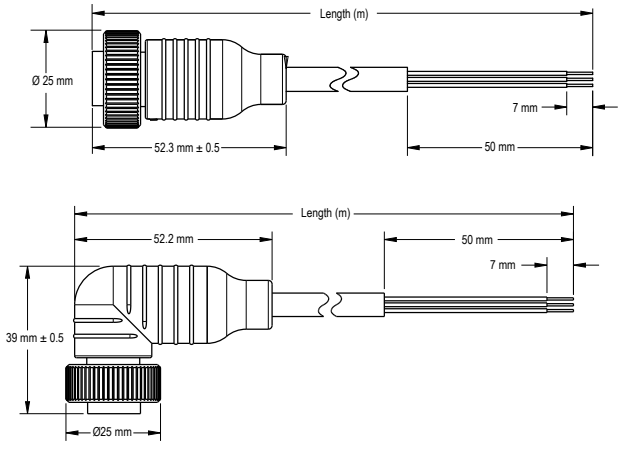

Single-Ended Mini Male

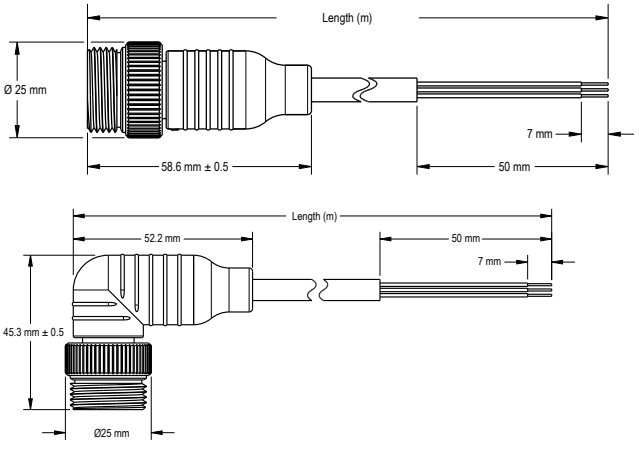

4-pin Mini Female

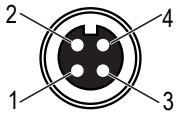

4-pin Mini Male Pinout

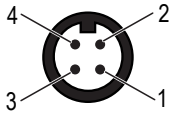

1. Brown
2. White
3. Blue
4. Black

Specifications

Current Rating
8 A

Voltage Rating
600 V

Original Instructions
13-Aug-26

© Banner Engineering Corp. All rights reserved.
www.bannerengineering.com

255983
p/n: 255983 Rev. B

ПРОМЭЛЕКТРОНИКА/ sales@prom-elec.com

Construction

Coupling nut material: Nickel-plated brass
Contact carrier: Black TPU
Connector body: Black TPU
Jacket material: Black PVC

Connections

Mini (7/8"-16UNF) female or male

Operating Conditions

Operating temperature: –40 °C to +70 °C (–40 °F to +158 °F)
Storage temperature: –40 °C to +70 °C (–40 °F to +158 °F)
90% at +50 °C maximum relative humidity (non-condensing)

Cable

Cable

18 AWG
Outer diameter: 6.73 mm
Jacket material: Black PVC

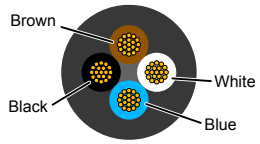

Bend Radius

Static bend radius: 5× the outside diameter
Dynamic bend radius: 10× the outside diameter

Applications

ITC (Instrumentation Tray Cable): 105 °C, 150 V, 5 A or less
PLTC (Power-Limited Tray Cable): 105 °C, 300 V
Sunlight resistant
Oil Res I and II
CMX-OUTDOOR-CMG
FT4 flame rating
MSHA

Banner Engineering Corp Limited Warranty

Banner Engineering Corp. warrants its products to be free from defects in material and workmanship for one year following the date of shipment. Banner Engineering Corp. will repair or replace, free of charge, any product of its manufacture which, at the time it is returned to the factory, is found to have been defective during the warranty period. This warranty does not cover damage or liability for misuse, abuse, or the improper application or installation of the Banner product.

THIS LIMITED WARRANTY IS EXCLUSIVE AND IN LIEU OF ALL OTHER WARRANTIES WHETHER EXPRESS OR IMPLIED (INCLUDING, WITHOUT LIMITATION, ANY WARRANTY OF MERCHANTABILITY OR FITNESS FOR A PARTICULAR PURPOSE), AND WHETHER ARISING UNDER COURSE OF PERFORMANCE, COURSE OF DEALING OR TRADE USAGE.

This Warranty is exclusive and limited to repair or, at the discretion of Banner Engineering Corp., replacement. **IN NO EVENT SHALL BANNER ENGINEERING CORP. BE LIABLE TO BUYER OR ANY OTHER PERSON OR ENTITY FOR ANY EXTRA COSTS, EXPENSES, LOSSES, LOSS OF PROFITS, OR ANY INCIDENTAL, CONSEQUENTIAL OR SPECIAL DAMAGES RESULTING FROM ANY PRODUCT DEFECT OR FROM THE USE OR INABILITY TO USE THE PRODUCT, WHETHER ARISING IN CONTRACT OR WARRANTY, STATUTE, TORT, STRICT LIABILITY, NEGLIGENCE, OR OTHERWISE.**

Banner Engineering Corp. reserves the right to change, modify or improve the design of the product without assuming any obligations or liabilities relating to any product previously manufactured by Banner Engineering Corp. Any misuse, abuse, or improper application or installation of this product or use of the product for personal protection applications when the product is identified as not intended for such purposes will void the product warranty. Any modifications to this product without prior express approval by Banner Engineering Corp will void the product warranties. All specifications published in this document are subject to change; Banner reserves the right to modify product specifications or update documentation at any time. Specifications and product information in English supersede that which is provided in any other language. For the most recent version of any documentation, refer to: www.bannerengineering.com.

For patent information, see www.bannerengineering.com/patents.

© Banner Engineering Corp. All rights reserved.
www.bannerengineering.com