TL50 Pro Tower Light with USB Datasheet

Features

50 mm Programmable Multicolor RGB Tower Light with USB Connection and Control

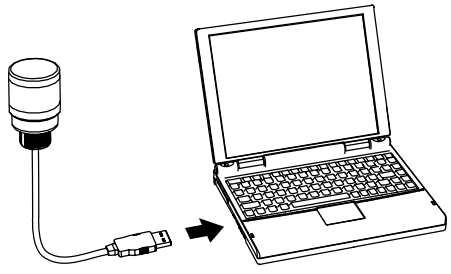

- Controlled by PC via USB interface
- USB interface gives full access to color, flashing, rotating, and dimming settings which provides dynamic response to changing machine conditions
- Rugged, cost-effective, and easy-to-install tower lights
- Illuminated segments provide easy-to-see operator guidance and indication of equipment status
- Compact and beacon models are more intense in a smaller form factor compared to standard models
- 5 V DC operation

Models

Family	Style	Housing	Number of Segments	Audible	Control	Housing Color	Connector
TL50	**P**	**C**	**1**	**A**	**U**		**QP**
	P = Pro	Blank = Standard C = Compact BL = Beacon	1 = 1 Segment	Blank = None (IP67) A = Audible (IP50)	U = USB	Blank = Black C = Gray	QP = 2 m (79 in) PVC-jacketed cable with a USB Type A connector

USB Configuration Overview

The TL50 Pro Tower Light with USB is a PC-controlled device requiring a software application. The tower light is powered directly from the USB port and utilizes a shared library to control all device functions. The device is compatible with a variety of Windows libraries which enable control using common Windows programming platforms, such as C#, Python, VisualBasic, Visual C++, Labview, and Matlab. Refer to document 218025 TL50 Pro with USB Instruction Manual for more information about device programming functions.

Configuration for the TL50 Pro with USB

Animation	Description
Off	Segment is off
Steady	Color 1 is on at defined intensity
Flash	Color 1 flashes at defined speed, color intensity, and pattern (normal, strobe, three pulse, SOS, or random)
Two Color Flash	Color 1 and Color 2 flash alternately at defined speed, color intensities, and pattern (normal, strobe, three pulse, SOS, or random)
50/50	Color 1 is displayed on 50% of the segment and Color 2 is displayed on the other 50% of the segment at the defined color intensities
50/50 Rotate	Color 1 is displayed on 50% of the segment and Color 2 is displayed on the other 50% of the segment while rotating at the defined speed, color intensities, and rotational direction
Chase	Color 1 is displayed as a single spot against the background of Color 2 while rotating at the defined speed, color intensities, and rotational direction
Intensity Sweep	Color 1 repeatedly increases and decreases intensity between 0% to 100% at defined speed and color intensity

Color 1 or Color 2

The following colors are available for Color 1 and Color 2.[1]

- Red
- Green
- Yellow
- Blue
- Magenta
- Cyan
- White
- Amber
- Rose
- Lime Green
- Orange
- Sky Blue
- Violet
- Spring Green

Intensity 1 or Intensity 2

The Intensity control sets the intensity of a color. Color 1 is controlled by Intensity 1. Color 2, if applicable, is controlled by Intensity 2.

Intensity	Tower Light Devices
Hi	100%

Continued on page 2

[1] The following colors are uncalibrated to achieve higher saturation: Red, Green, and Blue. They may show greater variance between devices than other colors.

© Banner Engineering Corp. All rights reserved.
www.bannerengineering.com

217569
p/n: 217569 Rev. D

ПРОМЭЛЕКТРОНИКА/ sales@prom-elec.com

Continued from page 1

Intensity	Tower Light Devices
Med	60%
Low	25%
Off	0%

Speed

The Speed control sets the speed of five animation options: flash, chase, rotate, scroll, and bounce.

Flash, Scroll, and Bounce Animation Speed

Speed	Description
Slow	0.5 Hz
Standard	1 Hz
Fast	5 Hz

Rotational and Chase Animation Speed

Speed	Description
Slow	1 Hz
Standard	2 Hz
Fast	4Hz

Pattern

The Pattern control sets the pattern of the flash animation.

Pattern	Description
Normal	Alternating Color 1; Color 2 at 50% duty cycle
Strobe	Continuous Color 1; Color 2 flashes at 20% duty cycle
3-Pulse	Three consecutive Color 1 pulses at 10% duty cycle on Color 2 background
SOS	Short pulse, short pulse, short pulse, long pulse, long pulse, long pulse, short pulse, short pulse, short pulse alternating Color 1 and Color 2
Random	Random sequence of light signals

Direction

The Direction control sets the direction of the animation.

Direction	Description
Clockwise (CW)	Animation rotates in clockwise direction. Applies to 50/50 rotate and chase.
Counterclockwise (CCW)	Animation rotates in counterclockwise direction. Applies to 50/50 rotate and chase.
Up	Animation originates from the connector end
Down	Animation originates from the non-connector end

Shift Enable

Shift enable controls the 50/50, 50/50 Rotate, and Chase animations in Run and Action Mode.
When applied, the shift enable consecutively offsets each segment animation by one LED.

Audible

The Audible control sets Audible options.

NOTE: Only available with Pro Series-enabled audible devices.

Audible	Description
Off	OFF
Steady	Constant tone
Pulsed	ON/OFF tone at 50% duty cycle
SOS	Short tone, short tone, short tone, long tone, long tone, long tone, short tone, short tone, short tone

© Banner Engineering Corp. All rights reserved.
www.bannerengineering.com

Specifications

Supply Voltage and Current

5 V DC

Maximum current: 500 mA

Maximum current for Standard Audible Alarm: 25 mA

Supply Protection Circuitry

Protected against reverse polarity and transient voltages

Input Rating

Indicator On/Off Response Time: 250 ms (maximum)

Connections

2 m (6.5 ft) PVC-jacketed cable with a USB Type A connector

Models with a quick-disconnect connector require a mating cordset; compatible with USB 2.0 and USB 3.0 Ports

Construction

Bases and Covers: ABS

Light Segment: Polycarbonate

Operating Conditions

–40 °C to +50 °C (–40 °F to +122 °F)

Standard Audible: –20 °C to +50 °C (–4 °F to +122 °F)

95% at +50 °C maximum relative humidity (non-condensing)

Environmental Rating

IP67

Standard Audible: IP50

Vibration and Mechanical Shock

Vibration: 10 Hz to 55 Hz, 1.0 mm peak-to-peak amplitude per IEC 60068-2-6

Shock: 30G 11 ms duration, half sine wave per IEC 60068-2-27

Operating System

Microsoft Windows operating system versions 7 or 10

Software Libraries

Windows DLL (Dynamic-Link Library); 32-Bit and 64-Bit

Windows Static Library; 32-Bit and 64-Bit

.NET DLL (Dynamic-Link Library

Certifications

Banner Engineering BV
Park Lane, Culliganlaan 2F bus 3
1831 Diegem, BELGIUM

Audible Adjustment

Standard Audible Alarm: Unscrew the cover (up to 1.5 turns maximum) to adjust the audible intensity)

Do not exceed 1.5 turns or the cover may detach during operation

For maximum intensity, rotate the center plug 180° counterclockwise to remove it

Audible Alarm

2.7 kHz ± 500 Hz oscillation frequency

Maximum intensity 92 dB at 1 m (3.3 ft) (typical)

Serial Communication Settings

Baud Rate: 19200
Data Bits: 8
Parity: None
Stop Bits: 1
Flow Control: None

Required Overcurrent Protection

WARNING: Electrical connections must be made by qualified personnel in accordance with local and national electrical codes and regulations.

Overcurrent protection is required to be provided by end product application per the supplied table.

Overcurrent protection may be provided with external fusing or via Current Limiting, Class 2 Power Supply.

Supply wiring leads < 24 AWG shall not be spliced.

For additional product support, go to www.bannerengineering.com.

Supply Wiring (AWG)	Required Overcurrent Protection (A)	Supply Wiring (AWG)	Required Overcurrent Protection (A)
20	5.0	26	1.0
22	3.0	28	0.8
24	2.0	30	0.5

Indicator Characteristics

Color	Dominant Wavelength (nm) or Color Temperature (CCT)	Color Coordinates[2]		Lumen Output Per Segment (Typical at 25 °C)		
		X	Y	Standard	Compact	Beacon
Red	620	0.689	0.309	7.2	6.3	9.8
Green	522	0.154	0.7	17.5	14.1	21.8
Yellow	576	0.477	0.493	23.8	18.9	29.2
Blue	466	0.14	0.054	3.4	2.5	4.1
Magenta	–	0.379	0.172	10.4	8.3	12.6
Cyan	493	0.17	0.34	19.2	14.9	22.9
White	5700 K	0.328	0.337	24.8	19.5	29.9
Amber	589	0.556	0.42	15.3	12.3	19.2
Rose	–	0.515	0.22	8.2	6.7	10.1
Lime Green	562	0.388	0.561	21.2	16.8	25.9
Orange	599	0.616	0.37	11.3	9.3	14.5
Sky Blue	486	0.155	0.247	20.1	15.6	24
Violet	–	0.217	0.089	6.6	5.1	8
Spring Green	508	0.177	0.536	18.2	14.2	21.9

FCC Part 15 Class B for Unintentional Radiators

(Part 15.105(b)) This equipment has been tested and found to comply with the limits for a Class B digital device, pursuant to part 15 of the FCC Rules. These limits are designed to provide reasonable protection against harmful interference in a residential installation. This equipment generates, uses, and can radiate radio frequency energy and, if not installed and used in accordance with the instructions, may cause harmful interference to radio communications. However, there is no guarantee that interference will not occur in a particular installation. If this equipment does cause harmful interference to radio or television reception, which can be determined by turning the equipment off and on, the user is encouraged to try to correct the interference by one or more of the following measures:

- Reorient or relocate the receiving antenna.
- Increase the separation between the equipment and receiver.
- Connect the equipment into an outlet on a circuit different from that to which the receiver is connected.
- Consult the dealer or an experienced radio/TV technician for help.

(Part 15.21) Any changes or modifications not expressly approved by the party responsible for compliance could void the user's authority to operate this equipment.

[2] Refer to CIE 1931 chromaticity diagram or color chart to show equivalent color with indicated color coordinates

© Banner Engineering Corp. All rights reserved.
www.bannerengineering.com

Industry Canada ICES-003(B)

This device complies with CAN ICES-3 (B)/NMB-3(B). Operation is subject to the following two conditions: 1) This device may not cause harmful interference; and 2) This device must accept any interference received, including interference that may cause undesired operation.

Cet appareil est conforme à la norme NMB-3(B). Le fonctionnement est soumis aux deux conditions suivantes : (1) ce dispositif ne peut pas occasionner d'interférences, et (2) il doit tolérer toute interférence, y compris celles susceptibles de provoquer un fonctionnement non souhaité du dispositif.

Dimensions

All measurements are listed in millimeters [inches], unless noted otherwise. The measurements provided are subject to change.

Standard Model Dimensions

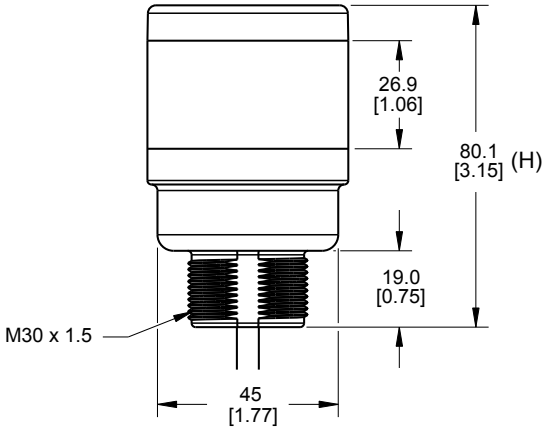

Compact and Beacon Model Dimensions

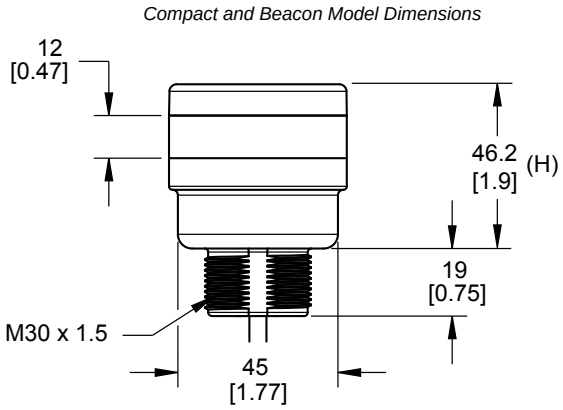

Standard Model with Audible Alarm Dimensions

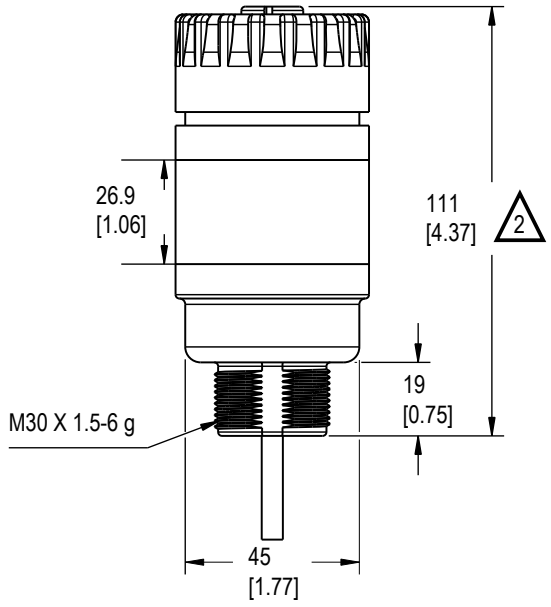

Compact and Beacon Model with Audible Alarm Dimensions

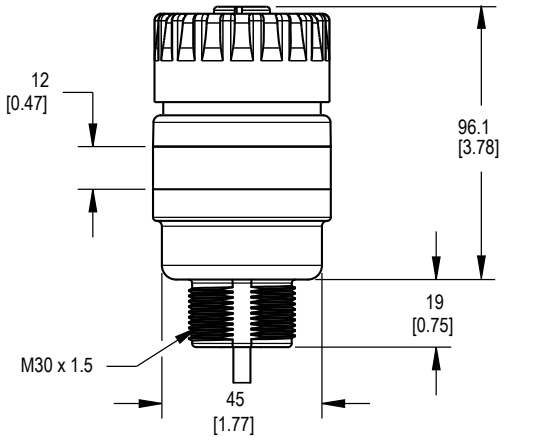

© Banner Engineering Corp. All rights reserved.
www.bannerengineering.com

Accessories

Mounting Brackets

All measurements are listed in millimeters [inches], unless noted otherwise. The measurements provided are subject to change.

SMB30A

- Right-angle bracket with curved slot for versatile orientation
- Clearance for M6 (¼ in) hardware
- Mounting hole for 30 mm sensor
- 12-gauge stainless steel

Hole center spacing: A to B=40
Hole size: A=ø 6.3, B= 27.1 × 6.3, C=ø 30.5

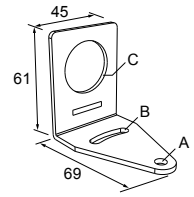

SMB30FA

- Swivel bracket with tilt and pan movement for precise adjustment
- Mounting hole for 30 mm sensor
- 12-gauge 304 stainless steel
- Easy sensor mounting to extrude rail T-slot
- Metric- and inch-size bolt available

Bolt thread: SMB30FA, A= 3/8 - 16 × 2 in; SMB30FAM10, A= M10 - 1.5 × 50
Hole size: B= ø 30.1

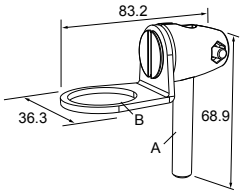

SMB30MM

- 12-gauge stainless steel bracket with curved mounting slots for versatile orientation
- Clearance for M6 (¼ in) hardware
- Mounting hole for 30 mm sensor

Hole center spacing: A = 51, A to B = 25.4
Hole size: A = 42.6 × 7, B = ø 6.4, C = ø 30.1

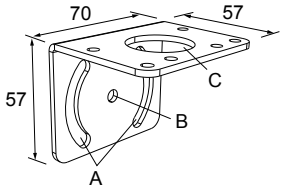

SMBAMS30P

- Flat SMBAMS series bracket
- 30 mm hole for mounting sensors
- Articulation slots for 90°+ rotation
- 12-gauge 300 series stainless steel

Hole center spacing: A=26.0, A to B=13.0
Hole size: A=26.8 × 7.0, B=ø 6.5, C=ø 31.0

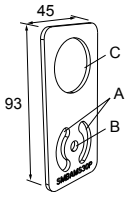

SMBAMS30RA

- Right-angle SMBAMS series bracket
- 30 mm hole for mounting sensors
- Articulation slots for 90°+ rotation
- 12-gauge (2.6 mm) cold-rolled steel

Hole center spacing: A=26.0, A to B=13.0
Hole size: A=26.8 × 7.0, B=ø 6.5, C=ø 31.0

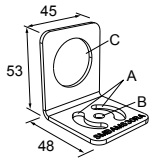

SMB30SC

- Swivel bracket with 30 mm mounting hole for sensor
- Black reinforced thermoplastic polyester
- Stainless steel mounting and swivel locking hardware included

Hole center spacing: A=ø 50.8
Hole size: A=ø 7.0, B=ø 30.0

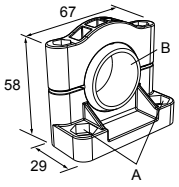

© Banner Engineering Corp. All rights reserved.
www.bannerengineering.com

LMBE12RA35

- Direct mounting of stand-off pipe, with common bracket type
- Zinc-plated steel
- 1/2-14 NPSM nut
- Mounting distance from the wall to the center of the 1/2-14 NPSM nut is 35 mm

Hole center spacing: 20.0

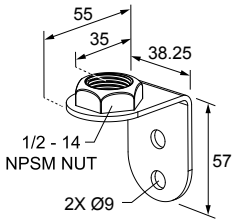

LMBE12RA45

- Direct mounting of stand-off pipe, with common bracket type
- Zinc-plated steel
- 1/2-14 NPSM nut
- Mounting distance from the wall to the center of the 1/2-14 NPSM nut is 45 mm

Hole center spacing: 35.0

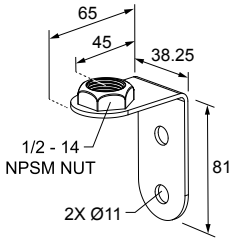

LMB Sealed Right-Angle Bracket

Model	Description	
LMB30RA - Black polycarbonate **LMB30RAC** - Gray polycarbonate	• **Direct-Mount Models** • Bracket kit with base, 30 mm adapter, set screw, fasteners, O-rings, and gaskets.	
LMBE12RA - Black polycarbonate **LMBE12RAC** - Gray polycarbonate	• **Pipe-Mount Models** • Bracket kit with base, ½-14 pipe adapter, set screw, fasteners, O-rings, and gaskets • For use with stand-off pipe (listed and sold separately)	

Elevated Mount System

Model			Description	Components
SA-M30TE12 - Black Acetal			• Streamlined black acetal or white UHMW stand-off pipe adapter/cover • Connects between 30 mm light base and ½ in. NPSM/DN15 pipe • Mounting hardware included	
SA-M30TE12C - White UHMW				
Polished 304 Stainless Steel	**Black Anodized Aluminum**	**Clear Anodized Aluminum**	• Elevated-use stand-off pipe (½ in. NPSM/DN15) • Polished 304 stainless steel, black anodized aluminum, or clear anodized aluminum surface • ½ in. NPT thread at both ends: one end screws into the internal threads of the light's base, and one end screws into the mounting base adapter/cover • Compatible with most industrial environments	
SOP-E12-150SS 150 mm (6 in) long	**SOP-E12-150A** 150 mm (6 in) long	**SOP-E12-150AC** 150 mm (6 in) long		
SOP-E12-300SS 300 mm (12 in) long	**SOP-E12-300A** 300 mm (12 in) long	**SOP-E12-300AC** 300 mm (12 in) long		
SOP-E12-900SS 900 mm (36 in) long	**SOP-E12-900A** 900 mm (36 in) long	**SOP-E12-900AC** 900 mm (36 in) long		
SA-E12M30 - Black Acetal			• Streamlined black acetal or white UHMW mounting base adapter/cover • Connects between ½ in. NPSM/DN15 pipe and 30 mm (1-3/16 in) drilled hole • Mounting hardware included	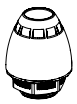
SA-E12M30C - White UHMW				

© Banner Engineering Corp. All rights reserved.
www.bannerengineering.com

Pipe Mounting Flange

Pipe Mounting Flange			
Model	**Description**	**Construction**	
SA-F12	• Elevated-use stand-off pipes (½ in, NPSM/ DN15) • M5 mounting hardware and nitrile gasket included	Die-cast zinc base with black paint	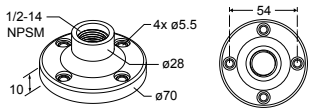
SA-F12-3	• Elevated-use stand-off pipes (½ in, NPSM/ DN15) • M4 mounting hardware and nitrile blend gasket included	Black Polycarbonate	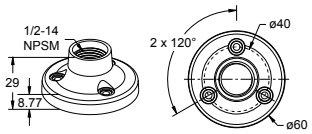

Foldable Mounting Brackets

Foldable Mounting Brackets			
Model	**Description**	**Construction**	
SA-FFB12	• For use with 1/2 inch stand-off pipes • Stainless steel hardware	Black polycarbonate	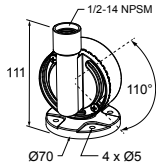
SA-FFB12C		Gray polycarbonate	

Banner Engineering Corp Limited Warranty

Banner Engineering Corp. warrants its products to be free from defects in material and workmanship for one year following the date of shipment. Banner Engineering Corp. will repair or replace, free of charge, any product of its manufacture which, at the time it is returned to the factory, is found to have been defective during the warranty period. This warranty does not cover damage or liability for misuse, abuse, or the improper application or installation of the Banner product.

THIS LIMITED WARRANTY IS EXCLUSIVE AND IN LIEU OF ALL OTHER WARRANTIES WHETHER EXPRESS OR IMPLIED (INCLUDING, WITHOUT LIMITATION, ANY WARRANTY OF MERCHANTABILITY OR FITNESS FOR A PARTICULAR PURPOSE), AND WHETHER ARISING UNDER COURSE OF PERFORMANCE, COURSE OF DEALING OR TRADE USAGE.

This Warranty is exclusive and limited to repair or, at the discretion of Banner Engineering Corp., replacement. **IN NO EVENT SHALL BANNER ENGINEERING CORP. BE LIABLE TO BUYER OR ANY OTHER PERSON OR ENTITY FOR ANY EXTRA COSTS, EXPENSES, LOSSES, LOSS OF PROFITS, OR ANY INCIDENTAL, CONSEQUENTIAL OR SPECIAL DAMAGES RESULTING FROM ANY PRODUCT DEFECT OR FROM THE USE OR INABILITY TO USE THE PRODUCT, WHETHER ARISING IN CONTRACT OR WARRANTY, STATUTE, TORT, STRICT LIABILITY, NEGLIGENCE, OR OTHERWISE.**

Banner Engineering Corp. reserves the right to change, modify or improve the design of the product without assuming any obligations or liabilities relating to any product previously manufactured by Banner Engineering Corp. Any misuse, abuse, or improper application or installation of this product or use of the product for personal protection applications when the product is identified as not intended for such purposes will void the product warranty. Any modifications to this product without prior express approval by Banner Engineering Corp will void the product warranties. All specifications published in this document are subject to change; Banner reserves the right to modify product specifications or update documentation at any time. Specifications and product information in English supersede that which is provided in any other language. For the most recent version of any documentation, refer to: www.bannerengineering.com.

For patent information, see www.bannerengineering.com/patents.

© Banner Engineering Corp. All rights reserved.
www.bannerengineering.com