TABLE OF LENGTHS						
P/N	MODEL NO.	"L1"	"L2"	"L3"	LABEL	COIL
67212	QDS-815C	4572[180]	64[2.52]	12[0.47]	140[5.51]	N/A
67213	QDS-825C	7620[300]	64[2.52]	12[0.47]	140[5.51]	80[3.15]
67214	QDS-850C	15240[600]	64[2.52]	12[0.47]	140[5.51]	80[3.15]
71126	QDS-875C	22860[900]	64[2.52]	12[0.47]	140[5.51]	230[9.06]
73412	QDS-8100C	30480[1200]	64[2.52]	12[0.47]	140[5.51]	230[9.06]
75577	QDS-8125C	38100[1500]	64[2.52]	12[0.47]	140[5.51]	230[9.06]
75578	QDS-8150C	45720[1800]	64[2.52]	12[0.47]	140[5.51]	230[9.06]
75579	QDS-8175C	53340[2100]	64[2.52]	12[0.47]	140[5.51]	230[9.06]
75583	QDS-8200C	60960[2400]	64[2.52]	12[0.47]	140[5.51]	230[9.06]

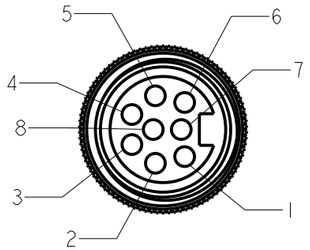

FEMALE POLES

1. BROWN
2. ORANGE/BLACK
3. ORANGE
4. WHITE
5. BLACK
6. BLUE
7. GREEN/YELLOW
8. VIOLET

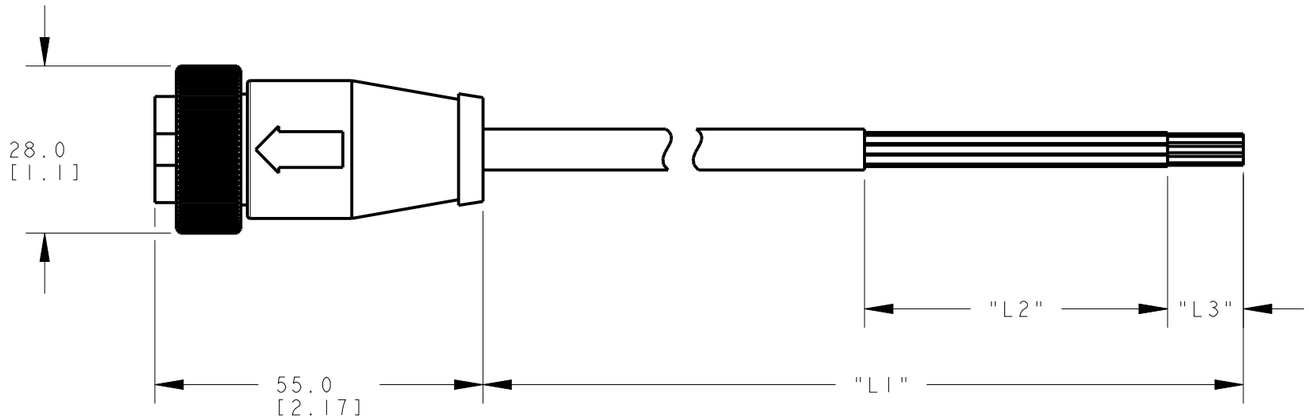

NOTES:
1. ALL DIMENSIONS ARE MILLIMETERS [INCHES] UNLESS OTHERWISE NOTED.
2. REFER TO "www.bannerengineering.com" FOR ADDITIONAL DATA AND SPECIFICATIONS.

This drawing is the property of BANNER ENGINEERING CORP. Any use or reproduction, in any form, without prior written permission of Banner is prohibited.
© 2015 Banner Engineering Corp.

THIRD ANGLE PROJECTION

BANNER ENGINEERING CORP.
www.bannerengineering.com

TITLE

QDS-8XXC

SIZE	DRAWING NO.	REV.
B	218956	A
SCALE 1:1	SHEET 1 OF 1	

CREO

ПРОМЭЛЕКТРОНИКА/ sales@prom-elec.com