A-GAGE® MINI-ARRAY® Measuring Light Screen System

Instruction Manual

Original Instructions
43298 Rev. H
27 August 2019
© Banner Engineering Corp. All rights reserved

BANNER®
more sensors, more solutions

43298

ПРОМЭЛЕКТРОНИКА/ sales@prom-elec.com

Contents

1 Features 3
1.1 MINI-ARRAY Models 4
2 Overview 6
2.1 System Features 7
2.2 Sensing Response 7
2.3 Supplied System Software 7
3 Specifications 9
3.1 Specifications for the Emitter/Receiver Pairs 9
3.2 Dimensions for the Emitters and Receivers 9
3.3 Specifications for the MAC Controllers 10
3.4 Dimensions for the Controller 11
4 Installation Instructions 12
4.1 Emitter and Receiver Mounting 12
4.2 Controller Mounting 13
4.3 Emitter and Receiver Wiring 13
4.4 Controller and Output Wiring 13
4.4.1 MAC-1 Controller Wiring 13
4.4.2 MACP-1 Controller Wiring 14
4.4.3 MACN-1 Controller Wiring 14
4.4.4 MACV-1 Controller Wiring 15
4.4.5 MACI-1 Controller Wiring 15
4.4.6 MAC16P-1 Controller Wiring 16
4.4.7 MAC16N-1 Controller Wiring 16
4.5 System Power Wiring 17
4.6 Gate Wiring 17
4.7 Serial Communication Wiring 17
5 Configuration Instructions 18
5.1 Install the Software 18
5.2 Define the Communication 18
5.3 Alignment 18
5.4 Parameter Setup Files (PSFs) 19
5.4.1 Assigning the Analysis Mode 20
5.4.2 Configuring the Outputs 21
5.4.3 Configuring the Blanking Specifications 24
5.4.4 Configuring the Scanning Method 24
5.4.5 Configuring the Control Mode 25
5.4.6 Configuring the Serial Communication 25
5.4.7 PSF Assignment and Storage 26
6 Operating Instructions 28
6.1 Status Indicators for the MINI-ARRAY Sensors 28
6.2 Status Indicators for the MACx-1 Series Controllers 28
6.3 Diagnostics Program 29
7 Additional Information 31
7.1 Host Mode Command 31
7.2 Serial Data Format 31
7.3 ASCII Format Data Transmission 31
7.4 Binary Format Data Transmission 32
8 Accessories 33
8.1 Anti-Vibration Mounting Kits 33
9 Product Support and Maintenance 34
9.1 Contact Us 34
9.2 Banner Engineering Corp. Limited Warranty 34

1 Features



- Measuring Light Screen system for inspection and profiling applications
- Modular system with compact controller and a variety of BMEL/BMRL series MINI-ARRAY emitters and receivers
- Sensors available with either 9.5 mm (3/8 in) or 19.1 mm (3/4 in) beam spacing and with array lengths from 6 in to 4 ft (in 6 in increments), plus 5 ft and 6 ft models
- Controller is programmable for any one or two of ten measurement modes (depending on model) and any one of four scanning modes, using a computer running Windows® XP, Vista, or 7, and the Banner-supplied software
- Software is also supplied for display of error analysis (via controller self-diagnostics) and for sensor alignment
- System status, including alignment, is displayed via LED indicators on the controller and on the receivers
- Controller may be programmed for blanking to ignore activity in one or two fields along the length of the array
- Programmable hysteresis at the high and/or low limit of each measurement area provides smoothing of output response; also programmable for number of consecutive scans before an output update
- Separate gate input (e.g., from a presence sensor) allows control of scan initiation
- Supports serial communication with a computer or PLC via RS-232C interface; enables a computer or PLC to process scan data and/or initiate scans; serial data may be either ASCII or binary

WARNING:

- **Do not use this device for personnel protection**
- Using this device for personnel protection could result in serious injury or death.
- This device does not include the self-checking redundant circuitry necessary to allow its use in personnel safety applications. A device failure or malfunction can cause either an energized (on) or de-energized (off) output condition.

1.1 MINI-ARRAY Models

Each A-GAGE MINI-ARRAY system must include one controller and an emitter/receiver pair of matching length and resolution. Configure and monitor the system using the supplied software and a user-supplied PC-compatible computer.

These MAC series controllers operate on 16 to 30 V dc and have one sensor pair input and one gate input.



MAC Series Controllers					
Models	**Output 1**	**Output 2**	**Serial Output**	**Scan Analysis Modes**	**PSF Parameter Part Number**
MAC-1	Discrete Reed Relay	Discrete NPN	RS-232 and RS-485	8	43989
MACN-1	Discrete NPN				
MACP-1	Discrete PNP	Discrete PNP			
MACV-1	Two Analog (0 to 10V dc Sourcing)	Discrete NPN	RS-232		
MACI-1	Two Analog (4 to 20 mA Sinking)				
MAC16N-1	16 Discrete NPN Outputs			10	59114
MAC16P-1	16 Discrete PNP Outputs				

The dimensions for the MAC series controllers listed are: 110 × 100 × 75 mm (4.3 in × 3.9 in × 3 in).

Emitter/Receiver Pairs -- 19.1 mm (3/4 inch) Beam Spacing (16 beams/foot)			
Emitter	**Receiver**	**Array Length**	**Total Beams**
BMEL616A	**BMRL616A**	133 mm (5.25 inch)	8
BMEL1216A	**BMRL1216A**	286 mm (11.25 inch)	16
BMEL1816A	**BMRL1816A**	438 mm (17.25 inch)	24
BMEL2416A	**BMRL2416A**	591 mm (23.25 inch)	32
BMEL3016A	**BMRL3016A**	743 mm (29.25 inch)	40
BMEL3616A	**BMRL3616A**	895 mm (35.25 inch)	48
BMEL4216A	**BMRL4216A**	1048 mm (41.25 inch)	56
BMEL4816A	**BMRL4816A**	1200 mm (47.25 inch)	64
BMEL6016A	**BMRL6016A**	1505 mm (59.25 inch)	80
BMEL7216A	**BMRL7216A**	1810 mm (71.25 inch)	96

Emitter/Receiver Pairs -- 9.5 mm (3/8 inch) Beam Spacing (32 beams/foot)			
Emitter	**Receiver**	**Array Length**	**Total Beams**
BMEL632A	**BMRL632A**	143 mm (5.62 inch)	16
BMEL1232A	**BMRL1232A**	295 mm (11.62 inch)	32
BMEL1832A	**BMRL1832A**	448 mm (17.62 inch)	48
BMEL2432A	**BMRL2432A**	600 mm (23.62 inch)	64
BMEL3032A	**BMRL3032A**	752 mm (29.62 inch)	80
BMEL3632A	**BMRL3632A**	905 mm (35.62 inch)	96
BMEL4232A	**BMRL4232A**	1057 mm (41.62 inch)	112
BMEL4832A	**BMRL4832A**	1210 mm (47.62 inch)	128
BMEL6032A	**BMRL6032A**	1514 mm (59.62 inch)	160
BMEL7232A	**BMRL7232A**	1819 mm (71.62 inch)	192



Controller-to-Sensor Cables (two required per system)		
Model	**Length**	**QD Connector**
QDC-515C	4.6 m (15 ft)	5-pin Mini-style straight
QDC-525C	7.6 m (25 ft)	
QDC-550C	15.2 m (50 ft)	
MAQDC-575C	22.7 m (75 ft)	
MAQDC-5100C	30.3 m (100 ft)	
MAQDC-5125C	37.9 m (125 ft)	
MAQDC-5150C	45.5 m (150 ft)	

2 Overview

The Banner A-GAGE® MINI-ARRAY measuring light screen is ideal for applications such as on-the-fly product sizing and profiling, edge-guiding and center-guiding, loop tensioning control, hole detection, parts counting, die ejection verification, and similar uses.

A typical MINI-ARRAY System consists of the following components:

- Controller module
- Emitter
- Receiver
- Two interconnecting cables

Sensors are available in array lengths from 6 inches to 4 feet (in 6 inch increments), plus 5 foot and 6 foot array models. Sensors are available with either 9.5 mm (3/8 inch) or 19.1 mm (3/4 inch) beam spacing, which translates to either 32 or 16 beams per foot of array length. Sensors with 3/8-inch beam spacing have a sensing range of up to 6 m (20 ft). Sensors with 3/4-inch beam spacing have a sensing range of up to 17 m (55 ft); 5 ft and 6 ft arrays have shorter ranges.

Some typical MINI-ARRAY applications are:

Paint Booth Profiling

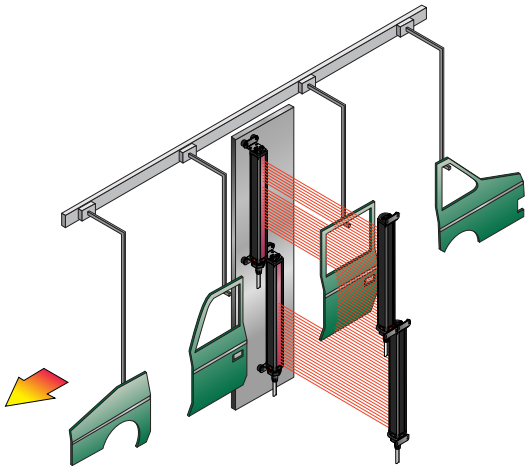

Box Profiling

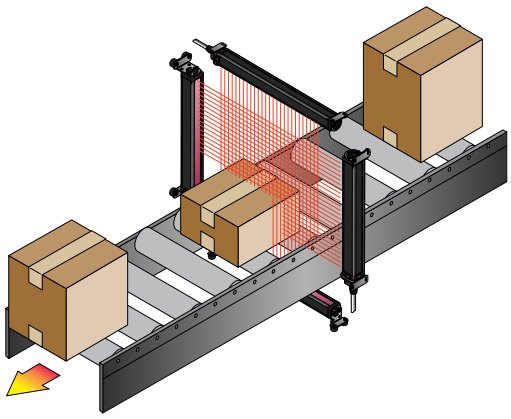

Inspection Applications

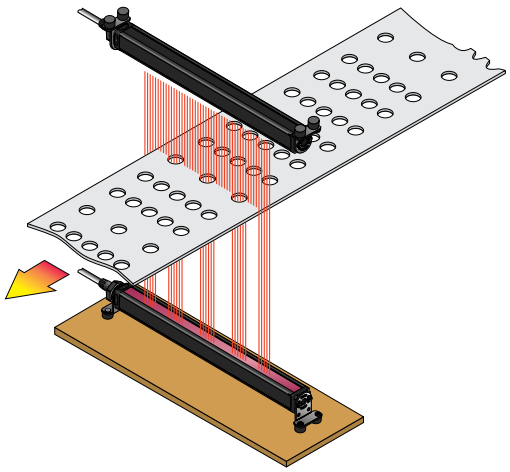

Edge Guiding

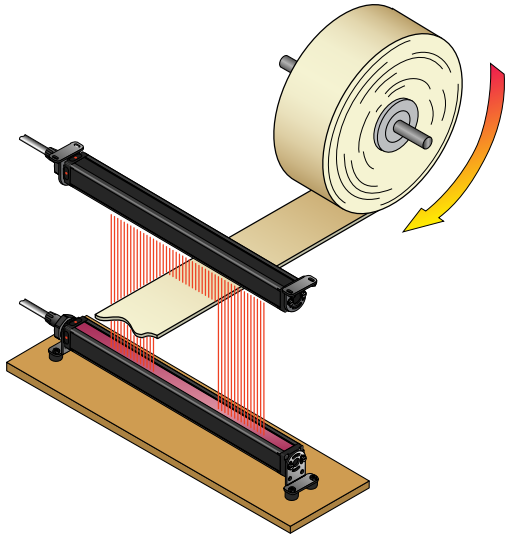

2.1 System Features

Built-in features simplify the operation of the A-GAGE MINI-ARRAY system. Programmable beam blanking accommodates machine components or other fixtures that must remain in or move through the light screen. Blanking is set by using the included configuration software. See ######## for more information.

Built-in diagnostic programming and easy-to-see indicators on the sensors and the control module make alignment and troubleshooting easy. The emitter has a red LED that signals proper operation. The receiver has three bright LEDs: green signals that the sensors are properly aligned; yellow signals marginal alignment; and red signals misalignment or a blocked condition.

The control module has seven status indicators: five red LEDs signal when outputs are conducting, Alarm output conducting, and gate signal received; a green LED signals that the sensors are properly aligned. DIAG 1, 2, and 3 LEDs indicate system status. A key to the diagnostics codes is printed on the side of the control module for simplified troubleshooting.

The MINI-ARRAY System provides a wide selection of sensing and output options, including: measurement (“scan analysis”) modes and scanning methods that can determine the target object’s location, overall size, total height or total width. Scanning may be continuous or controlled by a host process controller or a gate sensor. Some models (MAC1, MACP, MACN) support RS-485, where up to 15 systems may be networked.

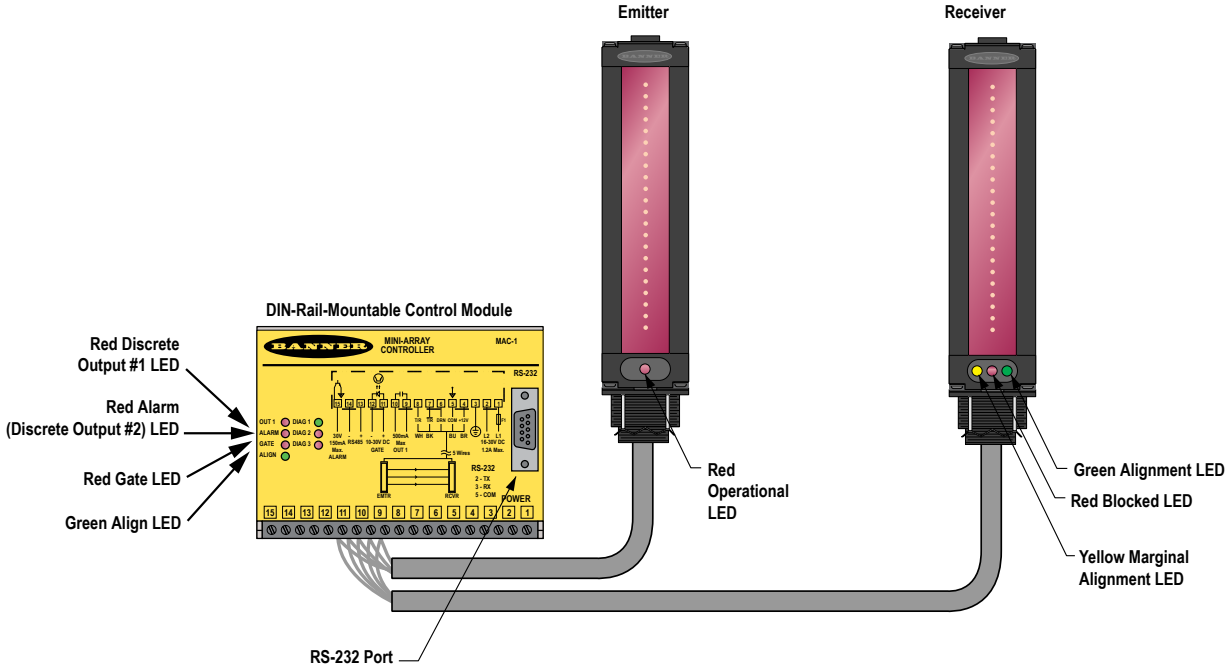

Figure 1. A-GAGE MINI-ARRAY System Features

2.2 Sensing Response

Sensing response is a function of the number of beams interrogated (steps) per scan of the array. The time per step is 55 µs (0.000055 seconds). As a result, dense arrays (for example with 3/8 inch beam spacing) yield the highest sensing resolution. Arrays with wider (3/4 inch) beam spacing offer faster sensing response.

2.3 Supplied System Software

The supplied software program, used to configure each system control module, may be run on any PC running Windows® XP, Vista, or 7. The menu-driven program walks the user through the many scanning and output options. After the desired options are selected, the user can save the combination of selections in a Parameter Setup File (PSF), and store it in the control module’s non-volatile memory. Any number of PSFs may be stored in the computer and recalled as needed.

The software also provides alignment and diagnostics routines. An Alignment screen displays the individual status of each beam in the light screen, as well as the total number of beams in the system, and totals of beams blocked, made, and blanked. Built-in system diagnostics can be used to assess emitter and receiver hardware errors.

3 Specifications

3.1 Specifications for the Emitter/Receiver Pairs

Range (9.5 mm Beam Spacing)
0.6 m to 6.1 m (2 ft to 20 ft) for sensors < 4 ft
0.6 m to 4.6 m (2 ft to 15 ft) for sensors > 4 ft
Maximum range is specified at the point where 3× excess gain remains.

Minimum Object Sensitivity (9.5 mm Beam Spacing)
19.1 mm (0.75 in)
Interlaced Mode: 12.7 mm (0.5 in)
Assumes sensing is in middle one-third of scanning range.

Supply Voltage and Current (Emitter)
0.10 amps at 12 V dc
Maximum current is for a 6 ft sensor.

Status Indicators (Emitter)
Red LED lights for proper operation

Construction
Aluminum housing with black anodized finish; acrylic lens cover

Sensor Scan Time
55 microseconds per beam, plus 1 millisecond processing time per scan
Assumes straight scan, continuous scan, and TBB mode

Environmental Rating
IEC IP65

Operating Conditions
–20 °C to +70 °C (–4 °F to +158 °F)
95% maximum relative humidity (non-condensing)

Range (19.1 mm Beam Spacing)
0.9 m to 17 m (3 ft to 55 ft) for sensors < 4 ft
0.9 m to 14 m (3 ft to 45 ft)for sensors > 4 ft
Maximum range is specified at the point where 3× excess gain remains.

Minimum Object Sensitivity (19.1 mm Beam Spacing)
38.1 mm (1.5 in)
Interlaced Mode: 25.4 mm (1 in)
Assumes sensing is in middle one-third of scanning range.

Supply Voltage and Current (Receiver)
9.5 mm beams: 0.75 amps at 12 V dc maximum
19.1 mm beams: 0.50 amps at 12 V dc maximum
Maximum current is for a 6 ft sensor.

Status Indicators (Receiver)
Green: sensors aligned (> 3× excess gain)
Amber: marginal alignment (1×-3× excess gain)
Red: sensors misaligned or beam(s) blocked

Connections
Emitter and receiver connect to controller using two 5-conductor quick-disconnect cables (one each for emitter and receiver), ordered separately.
Cables measure 8.1 mm (0.32 in) dia., and are shielded and PVC-jacketed; conductors are 20-gauge.
Use only Banner cables, which incorporate a ""twisted pair" for noise immunity on RS-485 data communication lines.
Emitter and receiver cables may not exceed 250 ft each.

3.2 Dimensions for the Emitters and Receivers

With Mounting Bracket Flanges Out

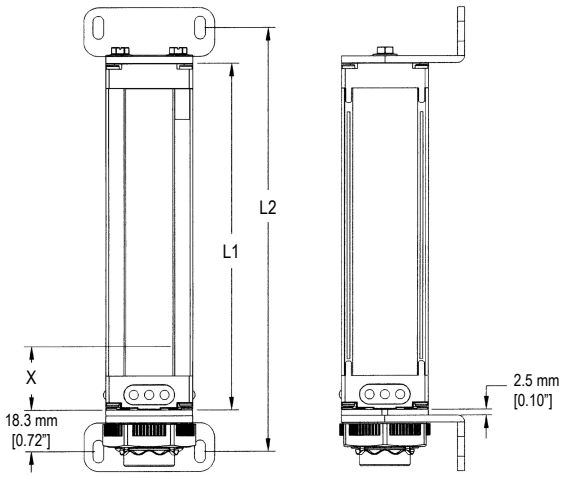

With Mounting Bracket Flanges In

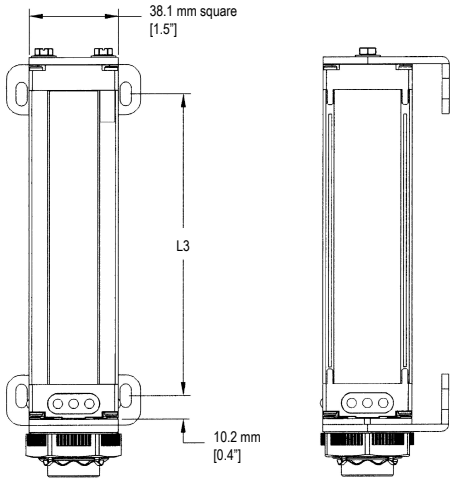

	Housing Length	Distance Between Bracket Holes	
Emitter/Receiver Models	**L1**	**L2**	**L3**
BMEL6..A / BMRL6..A	201 mm (7.9 in)	233.9 mm (9.21 in)	177 mm (6.97 in)
BMEL12..A / BMRL12..A	356 mm (14 in)	389.7 mm (15.35 in)	332.8 mm (13.1 in)

	Housing Length	Distance Between Bracket Holes	
Emitter/Receiver Models	**L1**	**L2**	**L3**
BMEL18..A / BMRL18..A	505 mm (19.9 in)	538.7 mm (21.22 in)	481.8 mm (18.97 in)
BMEL24..A / BMRL24..A	659 mm (26 in)	693.2 mm (27.31 in)	636.3 mm (25.05 in)
BMEL30..A / BMRL30.A	810 mm (31.9 in)	843.5 mm (33.23 in)	786.6 mm (30.97 in)
BMEL36..A / BMRL36.A	963 mm (37.9 in)	997.4 mm (39.29 in)	940.5 mm (37 in)
BMEL42..A / BMRL42.A	1115 mm (43.9 in)	1148 mm (45.2 in)	1091 mm (43 in)
BMEL48..A / BMRL48.A	1267 mm (49.9 in)	1301 mm (51.2 in)	1244 mm (49 in)
BMEL60..A / BMRL60..A	1572 mm (61.9 in)	1606 mm (63.2 in)	1549 mm (61 in)
BMEL72..A / BMRL72..A	1877 mm (73.9 in)	1910 mm (75.2 in)	1853 mm (73 in)

Beam Spacing	X (Distance for First Optical Channel)
9.5 mm (3/8 in)	38.1 mm (1.5 in)
19.1 mm (3/4 in)	42.9 mm (1.69 in)

3.3 Specifications for the MAC Controllers

Supply Voltage and Current

16 to 30 V dc at 1.25 amps maximum (see current requirements for sensors)
Controller alone (without sensors connected) requires 0.1 amp

Inputs

MINI-ARRAY sensor input (5 connections); emitter and receiver wire in parallel to five terminals
GATE input: Optically-isolated, requires 10 to 30 V dc (7.5K input impedance) for gate signal

Discrete Outputs (MAC-1)

Output 1 (OUT 1): Reed relay contact rated 125 V ac/dc max., 10 VA max. resistive load (non-inductive)
Output 2 (ALARM): Open collector NPN transistor rated 30 V dc max., 150 mA max, short-circuit protected (may be configured as a second data analysis output, system alarm output, or scan trigger output for a parallel array)
OFF-STATE Leakage Current: < 10 µA at 30 V dc
ON-STATE Saturation Voltage: <1 Volt at 10 mA, <1.5 Volt at 150 mA

Discrete Outputs (MACN-1)

Two open collector NPN transistor outputs

Discrete Outputs (MACP-1)

Two open collector PNP transistor outputs
Transistor rated 30 V dc max., 150 mA max, short circuit protected (may be configured as a second data analysis output, system alarm output, or scan trigger output for a parallel array)
OFF-STATE Leakage Current: <10 µA at 30 V dc

ON-STATE Saturation Voltage: <1 Volt at10 mA, <1.5 Volt at 150 mA

Discrete Outputs (MACV-1/MACI-1)

Alarm: Open collector NPN transistor rated 30 V dc max. 150 mA max, short circuit protected
(may be configured as a data analysis output, system alarm output, or scan trigger output for a parallel array)
OFF-STATE Leakage Current: <10 µA at 30 V dc
ON-STATE Saturation Voltage: <1 Volt at 10 mA, <1.5 Volt at150 mA

Discrete Outputs (MAC16P-1)

Sixteen open collector PNP transistor outputs

Discrete Outputs (MAC16N-1)

Sixteen open collector NPN transistor outputs
30 V dc max,150 mA max., short circuit protected
OFF-STATE leakage current: <10 µA
ON-STATE Saturation Voltage: <1 Volt at 10 mA; <1.9 V at 150 mA

System Response Time

Outputs are not active for 5 seconds after system power up. Maximum response time for the discrete outputs is two scan cycles. A scan cycle includes a sensor scan plus any serial data transmission.
Serial transmission (if activated) follows every sensor scan.

Controller Programming

Via RS-232 to PC-compatible computer running Windows® operating system and using Banner-supplied software

Analog Outputs

MACV-1: Two 0-10 Volts sourcing adjustable Null and Span (20 mA current limit)
MACI-1: Two 4-20 mA current sinking adjustable Null and Span (16 to 30 V input)
Resolution: Span minus Null, divided by the number of sensor channels
Linearity: 0.1% of Full Scale
Temp. Var.: 0.01% of Full Scale/°C

Serial Data Outputs

All Models: RS-232, ASCII or binary data format
Baud rate: 9600, 19.2K, or 38.4K 8 data bits, 1 start bit, 1 stop bit, even parity
Clear data may be suppressed; header string may be suppressed in binary format
MAC-1, MACN-1, and MACP-1: Up to 15 Controllers may be given unique address for RS-485 party line

Status Indicators

The following status LEDs are located on the front panel:

OUTPUT 1 (red) (name and function vary depending on model): Indicates active output
ALARM (red): Indicates that Output 2 or 16 is active (depending on model)
GATE (red): Indicates voltage is applied to GATE input
ALIGN (green): Indicates sensor aligned (excess gain >1x)

Plus three diagnostic LEDs:

DIAG1 (green): Indicates power is applied to the module
DIAG2 (red): Indicates receiver failure
DIAG3 (red): Indicates emitter failure

Software CD Part Numbers

Models MAC-1, MACI-1, MACN-1, MACP-1, and MACV-1: 75877
Models MAC16N-1 and MAC16P-1: 75878

Sensor Scan Time

For all models: 55 microseconds per beam plus processing time. The processing time is dependent on the scan analysis and the number of active outputs. This timing assumes a straight scan, continuous, and TBB mode.
MAC-1, MACN-1 & MACP-1: 1 millisecond processing time.
MACV-1 & MACI-1: 1.5 milliseconds processing time.
MAC16N-1 & MAC16P-1: 2.3 to 7 milliseconds processing time.

Construction

Polycarbonate

Environmental Rating

NEMA 1; IEC IP20

Operating Conditions

–20 °C to +70 °C (–4 °F to +158 °F)
95% maximum relative humidity (non-condensing)

Certifications

c UL US LISTED

Required Overcurrent Protection

WARNING: Electrical connections must be made by qualified personnel in accordance with local and national electrical codes and regulations.

Overcurrent protection is required to be provided by end product application per the supplied table.
Overcurrent protection may be provided with external fusing or via Current Limiting, Class 2 Power Supply.
Supply wiring leads < 24 AWG shall not be spliced.
For additional product support, go to *www.bannerengineering.com*.

Supply Wiring (AWG)	Required Overcurrent Protection (Amps)
20	5.0
22	3.0
24	2.0
26	1.0
28	0.8
30	0.5

3.4 Dimensions for the Controller

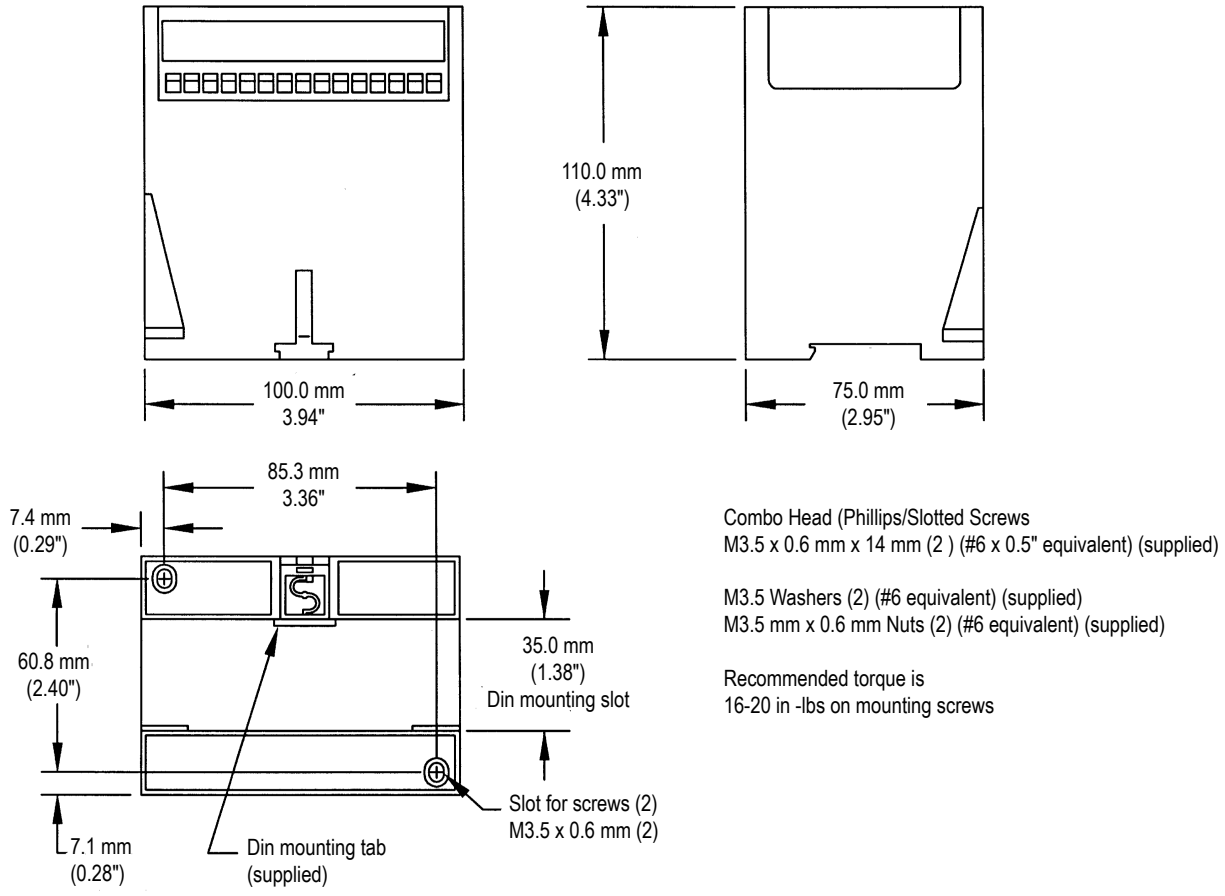

Combo Head (Phillips/Slotted Screws
M3.5 x 0.6 mm x 14 mm (2) (#6 x 0.5" equivalent) (supplied)

M3.5 Washers (2) (#6 equivalent) (supplied)
M3.5 mm x 0.6 mm Nuts (2) (#6 equivalent) (supplied)

Recommended torque is
16-20 in -lbs on mounting screws

4 Installation Instructions

4.1 Emitter and Receiver Mounting

Banner MINI-ARRAY emitters and receivers are small, lightweight, and easy to mount. The mounting brackets (supplied) allow ±30 degrees rotation.

From a common point of reference, make measurements to position the emitter and receiver in the same plane with their midpoints directly opposite each other. Mount the emitter and receiver brackets using the M4 × 0.7 × 14 mm bolts and associated mounting hardware (all supplied).

Although the internal circuitry of the emitter and receiver can withstand heavy impulse forces, vibration isolators can be used instead of the M4 bolts to dampen impulse forces and prevent possible damage from resonant vibration of the emitter or receiver assembly. Two different Anti-Vibration Mounting Kits are available from Banner. See *Accessories* (p. 33).

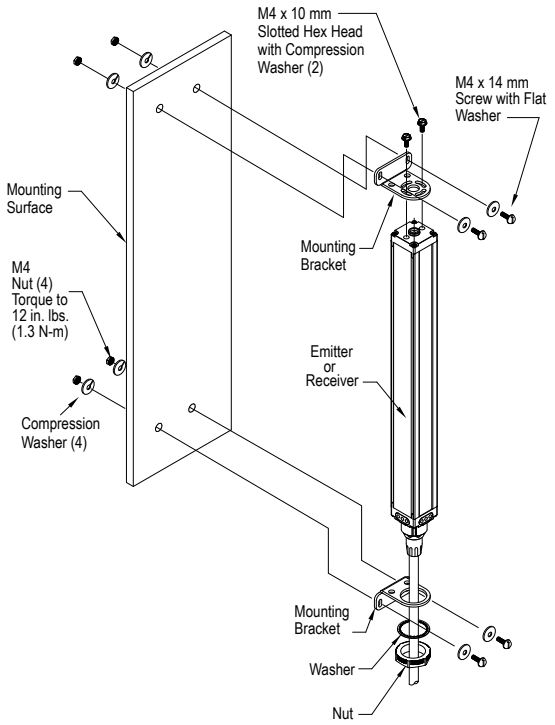

Figure 2. MINI-ARRAY emitter and receiver mounting hardware

1. Mount the emitter and receiver in their mounting brackets (see *Figure 2* (p. 12)).
2. Position the red lenses of the two units directly facing each other. The connector ends of both sensors must point in the same direction.
3. Measure from one or more reference planes (such as the floor) to the same points on the emitter and receiver to verify their mechanical alignment. If the sensors are positioned exactly vertical or exactly horizontal, a carpenter's level may be useful for checking alignment. Extending a straight-edge or a string between the sensors may help with positioning.
4. Also check by eye for line-of-sight alignment.
5. Make any necessary final mechanical adjustments, and hand-tighten the bracket hardware.
6. Prepare the cables: The drain wire is the uninsulated stranded wire which runs between the cable jacket and the foil shield. Remove the foil shield at the point where the wires exit the cable.

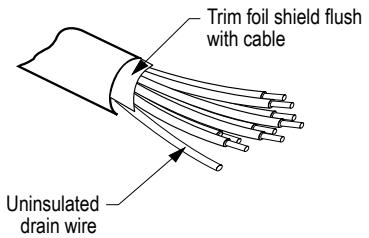

Figure 3. Emitter/Receiver Cable Preparation

7. Connect the shielded cables to the emitter and receiver. Follow the local wiring code for low-voltage dc control cables. The same cable type is used for both emitter and receiver (two cables required per system).
8. Route the cables to the terminal location.

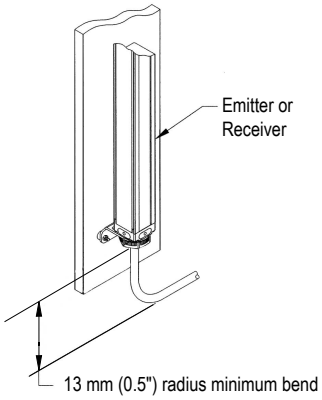

Figure 4. Cable Clearances

9. Cut the cables to length after making sure they are routed properly.

4.2 Controller Mounting

Install the controller inside an enclosure with a NEMA (or IEC) rating suitable for the operating environment. Mounting dimensions for the controller are shown in *Specifications* (p. 9). The controller is supplied with M3.5 × 0.6 hardware for direct mounting to a surface, or it can be mounted onto standard 35 mm DIN rail.

4.3 Emitter and Receiver Wiring

Emitter and receiver cables connect in parallel to controller terminals #4 through #8. Connect the wires from both sensor cables, as follows:

Terminal 4 Brown
Terminal 5 Blue
Terminal 6 Bare
Terminal 7 Black
Terminal 8 White

Trim off the foil shield and the braided shield at the point where the wires exit the cable as shown in *Figure 3* (p. 12).

4.4 Controller and Output Wiring

Cable clearance dimensions for the arrays are shown in *Emitter and Receiver Mounting* (p. 12). Controller connections are made via the wiring terminals along the front surface of each module.

4.4.1 MAC-1 Controller Wiring

Output 1: Controller terminals #9 and #10 (OUT1) are reed relay contacts rated at 125 V ac/dc maximum, 10 VA maximum resistive (non-inductive) load. It may be programmed as either normally open or normally closed.

Alarm: Controller terminal #15 (Alarm) is an open-collector NPN transistor switch rated at 30 V dc maximum, 150 mA maximum. It is protected against overload and short circuits.

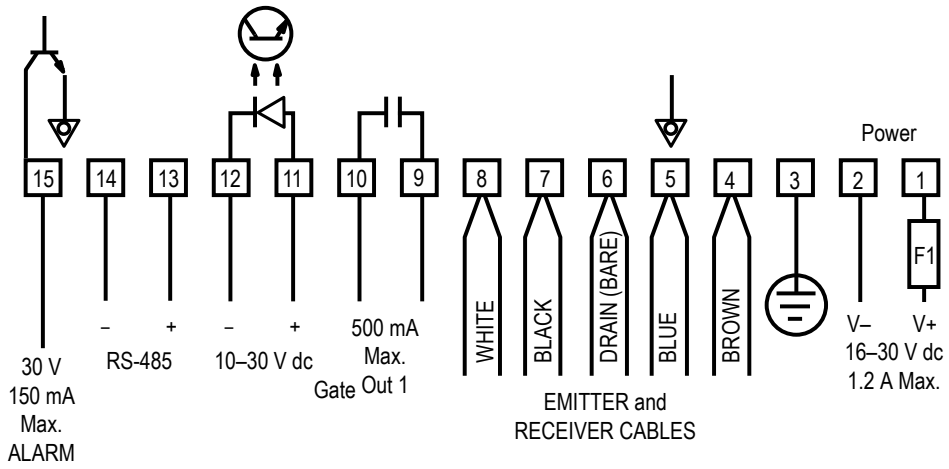

4.4.2 MACP-1 Controller Wiring

Output 1: Controller terminal #9 (OUT1) is an open-collector PNP transistor switch rated at 30V dc max., 150 mA max. It is protected against overload and short circuits.

Alarm: Controller terminal #15 (ALARM) is an open-collector PNP transistor switch rated at 30V dc max., 150 mA max. It is protected against overload and short circuits.

Both outputs are current sourcing.

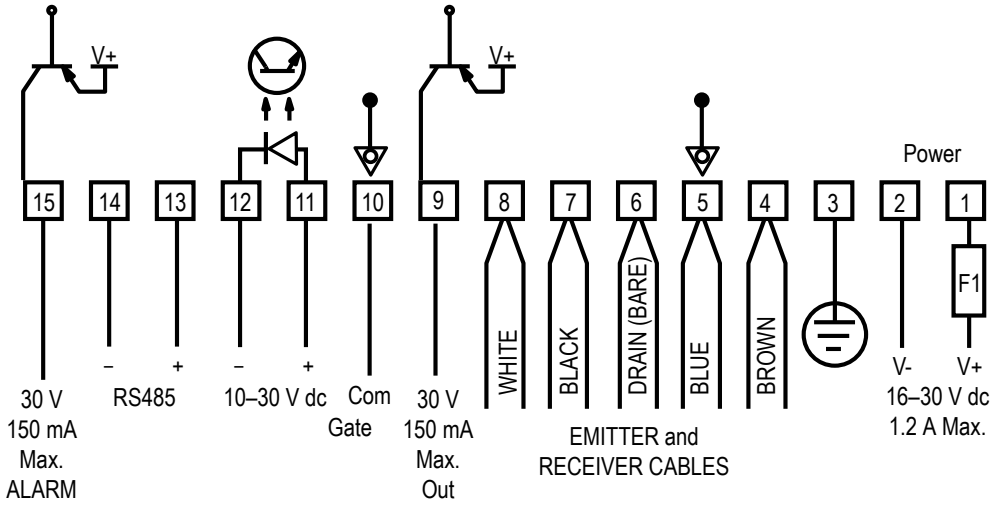

4.4.3 MACN-1 Controller Wiring

Output 1: Controller terminal #9 (OUT1) is an open-collector NPN transistor switch rated at 30V dc max., 150 mA max. It is protected against overload and short circuits.

Alarm: Controller terminal #15 (ALARM) is an open-collector NPN transistor switch rated at 30V dc max., 150 mA max. It is protected against overload and short circuits.

Both outputs are current sinking.

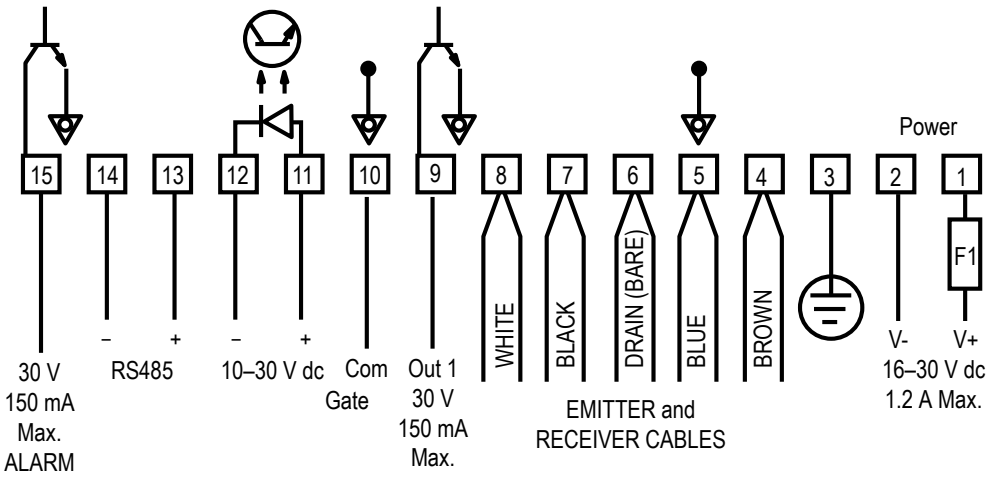

4.4.4 MACV-1 Controller Wiring

Voltage outputs 1 and 2: Controller terminals #9 (V out 1) and #13 (V out 2) are analog voltage outputs. The load for analog voltage Output #1 should be tied across terminals #9 and #10. The load for analog voltage Output #2 should be tied across terminals 13 and 14. Both switches are rated at 10 V dc maximum, 10 mA maximum. Both outputs are voltage sourcing.

Alarm: Controller terminal #15 (ALARM) is an open-collector NPN transistor rated at 30 V dc maximum, 150 mA maximum, current sinking.

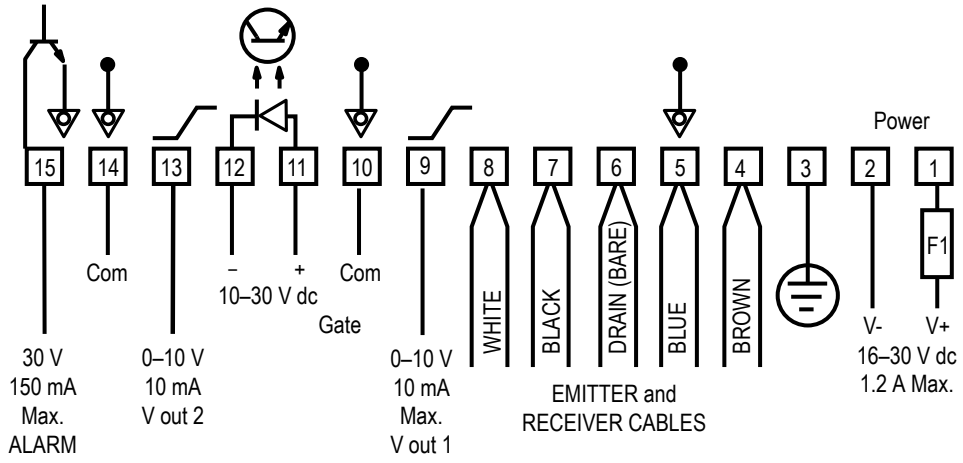

4.4.5 MACI-1 Controller Wiring

Current outputs 1 and 2: Controller terminal #9 (I out 1) and #13 (I out 2) are analog current outputs. The load for analog current Output #1 should be connected between an external 16 to 30V dc power supply and terminal #9. The load for analog current Output #2 should be connected between an external 16 to 30 V dc power supply and terminal 13. The load external power supply return should be common with the controller power supply return. Both outputs are current sinking.

Alarm: Controller terminal #15 (ALARM) is an open-collector NPN transistor rated at 30 V dc maximum, 150 mA maximum. It is protected against overload and short circuits.

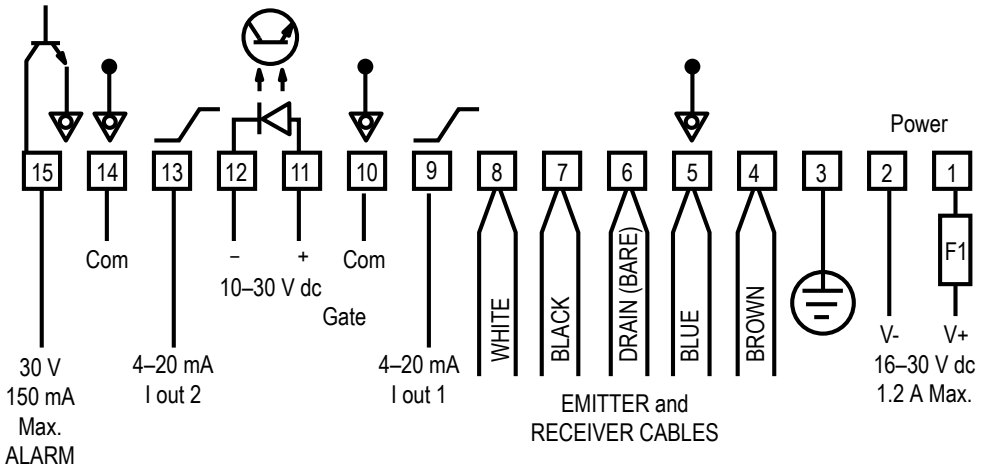

4.4.6 MAC16P-1 Controller Wiring

Terminals #15 through #30 are open-collector PNP transistor outputs rated at 30 V dc maximum, 150 mA maximum. They are protected against overload and short circuits. The isolated gate input is at pins 11 and 12.

Controller terminal #15 (output #16) may be used as an output or as an alarm. Whenever this output is active, the red Alarm LED is ON.

All outputs are current sourcing.

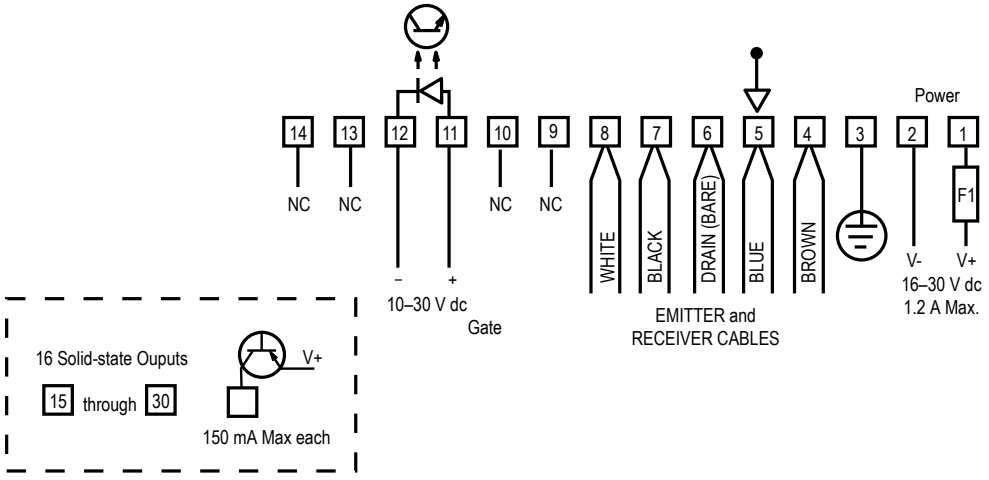

4.4.7 MAC16N-1 Controller Wiring

Terminals #15 through #30 are open-collector NPN transistor outputs rated at 30 V dc maximum, 150 mA maximum. They are protected against overload and short circuits. All outputs are current sinking.

Controller terminal #15 (output #16) may be used as an output or as an alarm. Whenever this output is active, the red Alarm LED is ON.

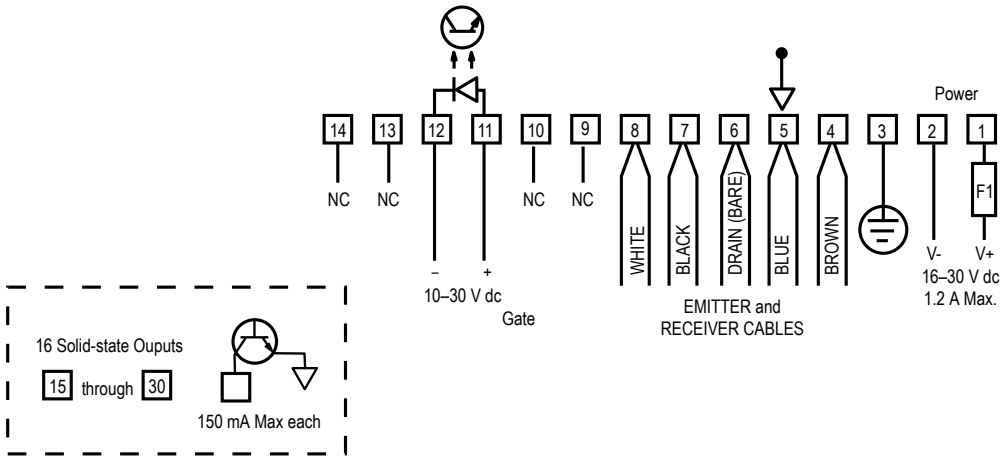

4.5 System Power Wiring

Wire the system power.

1. Connect a 16 to 30V dc source to controller terminals #1 (V+) and #2 (V–).
2. Connect a good earth ground to terminal #3.

A good earth ground is important for providing electrical and RF noise immunity to the MINI-ARRAY System. The dc power source must supply 1.25 amps (worst case) when using the longest (6 ft) sensors. See *Specifications* (p. 9) for more information.

4.6 Gate Wiring

Connect a switched 10 to 30 V dc source as a gating input (if required) between controller terminal #11 (+) and #12 (-). Voltage is typically switched by the open-collector output transistor of a dc sensing device.

4.7 Serial Communication Wiring

RS-485 (Models MAC-1, MACP-1, and MACN-1 only)— Connect RS-485 lines (if used) to terminals #13 (+) and #14 (-).

RS-232— Prepare an RS-232 cable using a DB-9 male connector with the connections shown. DO NOT use a “null modem” RS-232 cable.

RS-232 via a DB9 Connection	Pin	Description
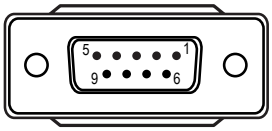	2	Transmit (TX)
	3	Receive (RX)
	5	Ground (GND)

5 Configuration Instructions

5.1 Install the Software

The Parameter Setup Software CD includes an installation program that quickly and easily loads the MINI-ARRAY configuration program into the computer. The MINI-ARRAY configuration program requires approximately 50 MB of hard disk space. Install as follows:

1. Use the Parameter Setup Software CD included with the controller, or download from *www.bannerengineering.com* as required.
2. Insert the Software CD into the CD drive.
   - If the program does not auto-start, browse to your CD drive, click **Setup.exe**, then select **START**, then select **RUN**. The Welcome dialog box displays. Select **Next**, and follow the prompts in the dialog boxes as they appear.
   - If the program does auto-start, the Welcome dialog box appears. Select **Next**, and follow the prompts in the dialog boxes as they appear.
3. The installation program decompresses the files. A status dialog box monitors the progress of the installation.
4. An **Installation Completed** dialog box appears. Select **OK**.
5. Reboot your computer for the changes to take effect.
   After the software is installed, a MINI-ARRAY shortcut icon is placed on your desktop. Double-click the **MINI-ARRAY icon** to launch the program, then follow the configuration instructions.

5.2 Define the Communication

The MINI-ARRAY software permits serial communication via RS-232 between the MAC controller and the PC. The minimum connections to the DB-9 connector on the MINI-ARRAY Controllers are listed in *Serial Communication Wiring* (p. 17). DO NOT use a “null modem” RS-232 cable.

To configure the COM port of the PC, follow these steps.

1. Select the **Options** > **Serial Port** menu.
   The program supports serial communication via the COM1-COM2 port of the computer.
2. Select either COM1 or COM2.
3. Check **Save Settings on Exit** (if it is not already checked) to store the COM port selection.

5.3 Alignment

Alignment status is continuously displayed by the green LED indicator on the Receiver and the controller.

When all unblanked beams are clear, and excess gain of all beams is more than 3×, the green alignment indicators are ON.

When the excess gain of one or more beams drops to between 3× and 1×, the green ALIGN LED on the controller remains ON, but the yellow LED on the receiver comes ON to indicate a marginal alignment warning.

The MINI-ARRAY software can display the status of each beam in the array. This is helpful for final alignment or when analyzing how the MINI-ARRAY is viewing objects in the sensing array. To use these feature, go to the **Mini-Array** > **Alignment** menu or press the F3 key.

The **Alignment** screen identifies the location of the first and last beams made (clear) and broken (blocked), plus the total number of beams made and broken. The beams are numbered in sequence from the cable end of the sensors to the top end. This is valuable during setup, for analyzing exactly what is being seen by the light screen. (The Diagnostics screen indicates any problems with the emitter or the receiver.)

Models **MAC-1, MACP-1, MACN-1, MACV-1, and MACI-1**—To display current information, select the desired Channel Status Option (Broken, Made or Both) and select Run. The chart on the right side of the screen shows the status (broken or made) of each beam in the array. Beam status is continuously updated to allow accurate positioning of the array, and/or analysis of sensing response.

To exit the Alignment screen, first select **Stop**, then select **Exit**.

Models **MAC16P-1 and MAC16N-1**—The Alignment screen displays the status of each beam along the entire length of the light screen. The information displayed includes the total number of optical channels (labeled as Beams), the number of blocked, made, and blanked beams. Each channel state is indicated as either 1-made, 0-blocked, or B-blanked. Other alignment functions allow the user to scan on a step command and to adjust the blanking fields. Each channel can be individually blanked. When a channel is blanked, the controller ignores the state of the channel and does not consider the channel when calculating measurement mode data.

5.4 Parameter Setup Files (PSFs)

The input and output response of the MAC controller is programmed using the PSF Configuration screen. To access the PSF Configuration screen, go to **Edit PSF** under the **Main** menu or press the F4 key.

PSF Configuration Screen for Models MAC-1, MACP-1, MACN-1, MACV-1, and MACI-1

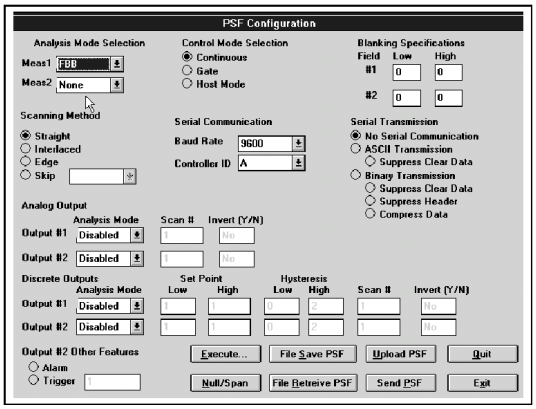

PSF Configuration Screen for Models MAC16N-1 and MAC16P-1

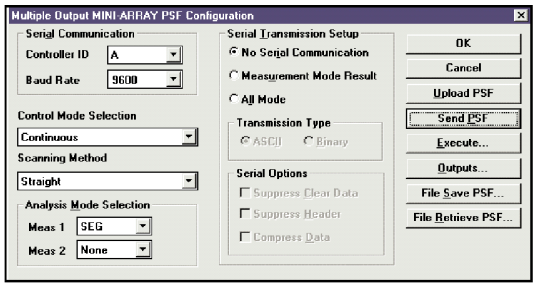

The software included with the controller makes it easy to configure the MINI-ARRAY using your PC-compatible computer. Simply install the software, launch the program, and access the **Edit PSF Configuration** screen. Each option is selectable using your mouse and the pop-up menu-style selections.

Alarm/Trigger—Output 2 may instead be programmed to serve as a trigger input for another MINI-ARRAY or ALARM for the self-diagnostic circuitry.

Analog and Discrete Output Assignment—Assigns an analysis (measurement) mode to each output.

Analysis (Measurement) Mode Selection—Choose the measurement option that best tells you the size and/or position of objects as they relate to the array.

Blanking—Allows either 1 or 2 areas of the array to be blind to the activity of the areas specified.

Control Mode Selection—There are three modes to choose from:

- Continuous Mode: The controller constantly polls the array for status.
- Gate Mode: The controller polls the array for status when prompted by an input from a Gate sensor.
- Host Mode: The controller polls the array for status when prompted by a host controller.

Invert—Allows output to be normally open (No) or normally closed (Yes).

Scan #—Analog outputs are updated with an average value of the data received during the selected number of scans. Discrete outputs respond only if the received data is identical for all the selected number of consecutive scans. Values: 1 through 9.

Scanning Method—There are four scanning methods:

- Straight scan polls each beam sequentially to determine the target object's overall size. This is the most accurate and precise measurement, but also the most time-consuming.
- Interlaced scan alternates a straight scan with a slanted beam scan to improve optical resolution in the center one third of the sensing range.
- Edge scan activates only the beams located near the top edge of the object in the light screen to reduce the sensing response time.
- Skip scan skips one to seven beams to reduce the response time. Minimum object detection size increases proportionally to the number of beams skipped.

Serial Communication—Changes the identification and baud rate of the controller being configured.

Serial Transmission—Choose ASCII, binary, or no serial communication.

Set Point and Hysteresis Selection—Assigns the set point to determine where within the array the output(s) will respond and the hysteresis values to smooth the output response.

Mode		MAC-1, MACP-1, and MACN-1	MACV-1 and MACI-1	MAC16N-1 and MAC16P-1
Analysis Mode Selection	ALL: All data passed to host	x	x	x

Mode		MAC-1, MACP-1, and MACN-1	MACV-1 and MACI-1	MAC16N-1 and MAC16P-1
	FBB: First Beam Blocked	x	x	x
	LBB: Last Beam Blocked	x	x	x
	TBB: Total Beams Blocked	x	x	x
	CBB: Contiguous Beams Blocked	x	x	x
	FBM: First Beam Made	x	x	x
	LBM: Last Beam Made	x	x	x
	TBM: Total Beams Made	x	x	x
	CBM: Contiguous Beams Made	x	x	x
	SEG: Segments			x
	TRN: Transitions			x
	VHS: Vehicle Separation	x		
Blanking Options	One or two fields may be blanked	x	x	
	Blanking conditions are unlimited			x
Output Assignments	2 to 16 outputs, depending on model			
Scanning Methods	Straight Scan, Interlaced Scan, Edge Scan, Skip Scan			
Control Mode Selection	Continuous scanning Gate Mode: scanning controlled by applying 10-30V dc to GATE input Host Mode: scanning controlled by host computer or PLC			
Serial Communication	Defines baud rate and controller I.D.			
Serial Transmission	Activates serial data transmission and specifies data format.			

After a PSF is configured, it may be sent to the controller. The PSF may also be saved for call-up at a later time. Many PSFs may be saved within PC files for quick controller configuration whenever a configuration change is required.

5.4.1 Assigning the Analysis Mode

The MINI-ARRAY controller is a versatile microcontroller-based module that may be configured using a PC-compatible computer running Windows® and the Banner-supplied software via the built-in RS-232 or RS-485 interface.

You may program one or two Measurement Analysis modes. Assign Meas1 or Meas2 to one or both outputs. The Banner MINI-ARRAY System can be programmed for any one or two of the following Scan Analysis Modes:

All Data (ALL)—The controller passes all beam condition data for every scan to the serial interface for analysis by a host computer or controller.

First Beam Blocked (FBB)—The controller identifies the location of the first beam blocked. Beams are numbered, beginning with the cabled end of the sensor, and continuing in sequence to the top end of the sensor.

Last Beam Blocked (LBB)—The controller identifies the location of the last beam blocked.

Total Beams Blocked (TBB)—The controller totals the number of blocked beams.

Contiguous Beams Blocked (CBB)—The controller totals the number of contiguous beams blocked in each group of blocked beams along the length of the light screen and registers the maximum value.

First Beam Made (FBM)—The controller identifies the location of the first clear beam.

Last Beam Made (LBM)—The controller identifies the location of the last clear beam.

Total Beams Made (TBM)—The controller totals the number of clear beams.

Contiguous Beams Made (CBM)—The controller totals the number of contiguous clear beams in each group of clear beams along the length of the light screen and registers the maximum value.

Vehicle Separation (VHS) (discrete output models only)—Controller output #1 is energized when six or more continuous inches of light screen length are blocked (i.e., contiguous beams blocked), and de-energizes when all beams are clear. This mode is typically used for vehicle sensing in toll booth applications.

Segment (SEG) (controller models MAC16N-1 and MAC16P-1 only)—The controller segments the array into regions and allows the user to partition the array. The user defines contiguous segments. Once the segments are defined, the Controller monitors each segment for blocked beams within each segment. If one or more beams are blocked within any segment, the output corresponding to that segment will respond.

Transition (TRN) (controller models MAC16N-1 and MAC16P-1 only)—The controller counts transitions, which are used to count objects. This mode counts both clear-to-blocked and blocked-to-clear transitions. For example, if an object blocks beams 20 through 30, the TRN mode will count two transitions. If an additional object blocks beams 35 through 40, then the TRN mode will count four transitions.

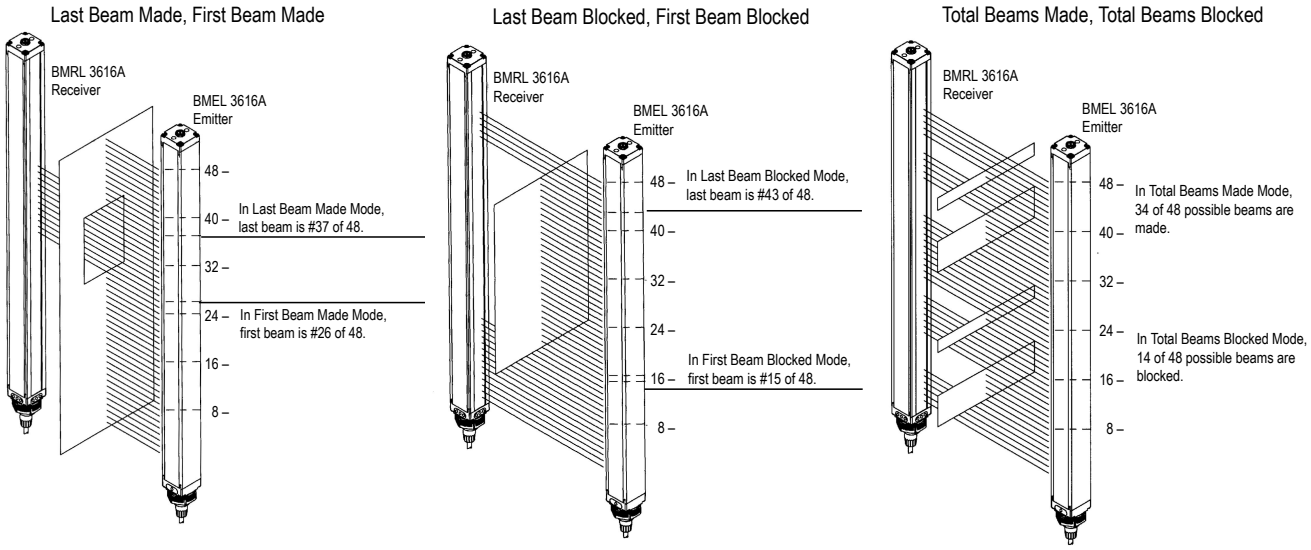

5.4.2 Configuring the Outputs

The controller offers 2, 3, or 16 outputs, depending on the model. One scan analysis mode may be assigned to Output 1 and a second, different, analysis mode may be assigned to Output 2. All models except the 16-output models have an output labeled **Alarm**. This output can be configured to:

- Function as the alarm output for the controller's self-diagnostic circuitry when a scan analysis mode is not assigned to it; or
- Serve as a trigger input to begin the scan sequence of another MINI-ARRAY System.

Configuring the Discrete Outputs (MAC-1, MACP-1, MACN-1, MACV-1, and MACI-1)

Use the **Output Assignments** section of the **PSF Configuration** screen to customize the Analysis Mode(s) response. With the exceptions noted, either Meas1 or Meas2 can be assigned to Output 1 or Output 2.

Output 2 may be assigned as an Alarm output for the module's self-diagnostic circuitry when a scan analysis mode is not assigned to it. Output 2 can also be programmed to serve as a Trigger input to begin the scan sequence of another MINI-ARRAY System. The Trigger value is the beam location along the array at which the Trigger output (during a scan) occurs.

Set Point (Low and High) determines where within the array the output(s) responds. In the case of total or contiguous beams made or broken, these settings determine the minimum and maximum number of beams required for an output.

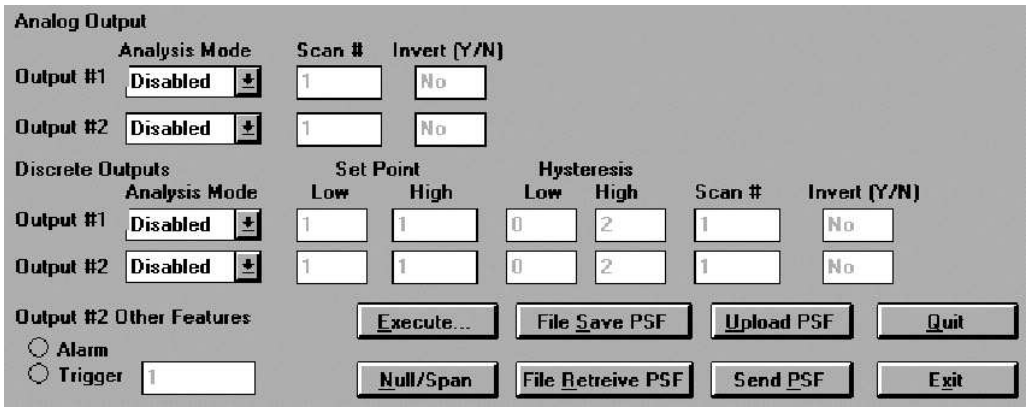

Hysteresis (Low and High) determines how much change must occur at each set point to cause the associated output to change state. Hysteresis avoids unstable output conditions (chattering) when the scanning condition exactly matches one of the set points. The default setting for hysteresis is one beam less than the Low Set Point and one beam more than the High Set Point.

Scan # is the number of consecutive array scans required before the associated output is updated. The controller can be programmed for from one to nine consecutive scans. The scan data MUST BE THE SAME for all consecutive scans before the associated output updates.

Invert (Y/N) allows the output to be normally open (No) or normally closed (Yes).

Configuring the Discrete Outputs (MAC16P-1, MAC16N-1)

Configure the 16 discrete outputs using the Outputs button on the Multiple Output MINI-ARRAY **PSF Configuration** screen.

The **Outputs** button launches the **Edit Discrete Outputs** screen, which allows the Set Points and Hysteresis levels to be defined for each output. Set Point and Hysteresis values may be configured individually for each output and assigned to either Meas1 or Meas2.

Set Point level defines the condition where the output is in the “true condition”. For a typical application, the output will be active when the Measurement mode result is between the set point limits. If the inverted option is specified, the output will be inactive when the Measurement mode result is between the set point limits (i.e., the true condition).

The **Hysteresis Low and High** levels determine when the output changes back to the false condition.

The SEG measurement mode uses the Set Point Low and High levels to define segmentation of the light screen. As an example, Output 1 Set Point Low is 5 and the Set Point High is 20. These two values define beams 5 through 20 as a segment. When any of these beams are blocked, this segment of the light screen is considered blocked, and Output 1 is active (or inactive, if “Inverted” is selected). For the SEG measurement mode, the Hysteresis specification is inactive.

The **Scan Number** may be used to change the number of consecutive scans necessary to change the output. When the Scan Number is set to one, the output changes after only one scan. If the Scan Number is set to five, the outputs do not change unless the condition is true for five consecutive scans.

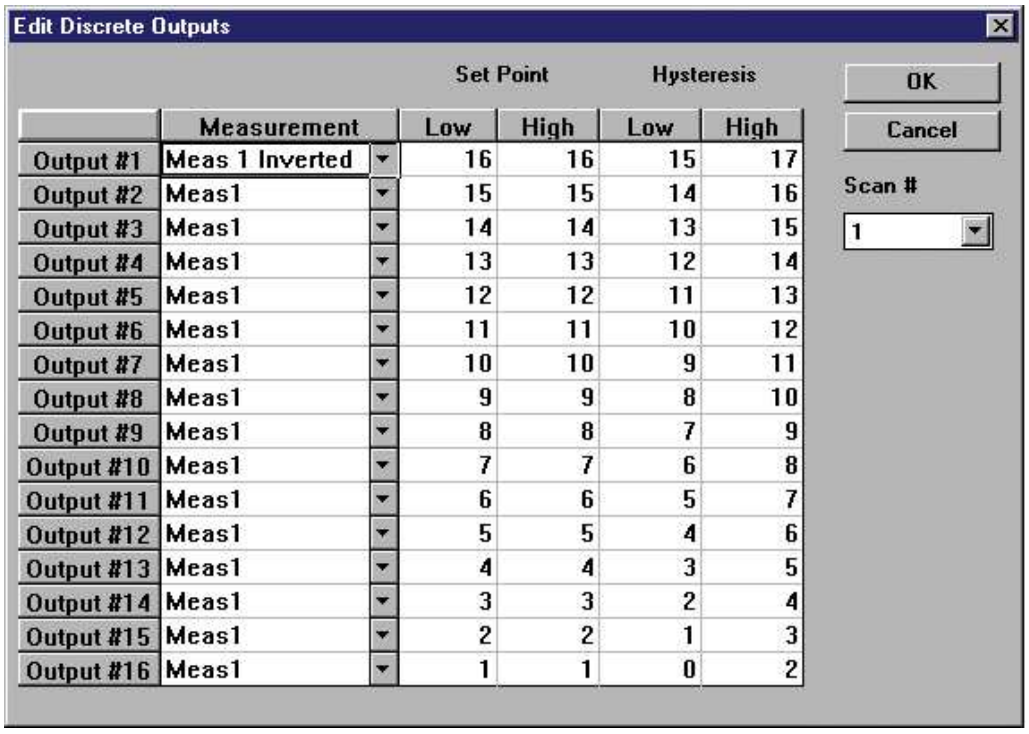

Configuring the Analog Outputs (MACV-1 and MACI-1)

The MACV-1 and MACI-1 Controllers offer two independent analog outputs.

For Analog Output 1 and Analog Output 2, each output is assigned to one of six analysis modes, which are selected using the **Edit PSF** screen.

1. Specify the **Analysis Mode Selection** for Meas1 and Meas2
2. Specify the **Analog Output** using the Analog Output choices. The analysis mode is selected as Meas1, Meas2, or Disabled.
    - Disabled: Output is not used
    - Meas1 and Meas2: Reflect the choices provided with the Analysis Mode Selection
3. Define the number of scans (**Scan #**) to average before the analog output updates. Accepted values are 1 through 9.
4. If desired, select the **Invert** option to change the output from a rising signal to a falling signal.

Null/Span Adjustment—The user can adjust both the zero and full-scale reading for both analog outputs of MACV-1 and MACI-1 Controllers. This adjustment is implemented via the **Edit PSF** screen **Null/Span** button, which activates the Null/Span menu. The Null/Span menu causes the controller to temporarily respond to scaling adjustments. The Null and Span ranges can be adjusted as follows:

Model	Null		Span	
	Min	Max	Min	Max
MACV-1	10 mV	2.3 V	4.8 V	10.1 V
MACI-1	3.9 mA	7.8 mA	11.9 mA	20.2 mA

Each output's **Null and Span** is independently adjusted using the sliding bars. When the adjustments are made, the new values can be temporarily monitored by selecting either the **Null Update** or **Span Update** button. Click **OK** to save the new settings and return the controller to normal operation. Click **Cancel** to ignore any Null/Span adjustments and return the controller to normal operation with the previously saved null and span settings.

The MAC controller has a four-minute Null/Span time-out feature that causes the controller to leave the Null/Span adjustment procedure when neither the Null Update nor the Span Update functions are accessed. When this time-out condition occurs, the MAC controller automatically cancels the Null/Span adjustment procedure and returns to the previously saved settings.

5.4.3 Configuring the Blanking Specifications

Blanking specifications allow either one or two areas of the array to be blanked (made blind to activity within that area).

MAC-1, MACP-1, MACN-1, MACV-1, and MACI-1 Controller Models

Beams are numbered from the bottom (cable end) of the sensors to the top of the sensors. The Low beam number and the High beam number can be designated to define a **Field** to be blanked. Zeros are used as default settings to signify no blanking.

MAC16P-1 and MAC16N-1 Controller Models

The controller can specify blanking of any light channel and save these specifications in static memory. Blanking options are changed using the supplied software.

Under the MINI-ARRAY tasks, select the **Alignment** function to access the **Alignment** screen. Click **Start** to scan and update the **Alignment** screen.

Available blanking commands include: Clear Blanking Fields, Restore Controller Settings, Auto Blanking, Abort Auto Blanking, Save to File, Read From File, Cancel, OK, and Edit.

- Clear Blanking Fields removes all blanking specifications.
- Restore Controller Settings reads the previously saved blanking specifications from the MINI-ARRAY controller.
- Auto Blanking selects all blocked channels for blanking. When the Auto Blanking feature is selected, the settings may be accepted or aborted.
- Abort Auto Blanking cancels Auto Blanking.
- File Save and File Retrieve allow the user to save and retrieve blanking data to a file.
- The OK button saves the new blanking configuration to the controller. After the OK button is selected, Restore Controller Settings will reflect the new blanking configuration.
- The Cancel button prevents the new blanking configuration from being saved.
- The Edit function allows individual beams to be blanked by launching the Channel Blanking Edit screen.

The **Channel Blanking Edit** screen groups the beams into rows with a check box for each beam. For instance, the first row is labeled 1-16. The first check box represents the blanking state of channel 1. A check mark indicates that the channel has been selected for blanking.

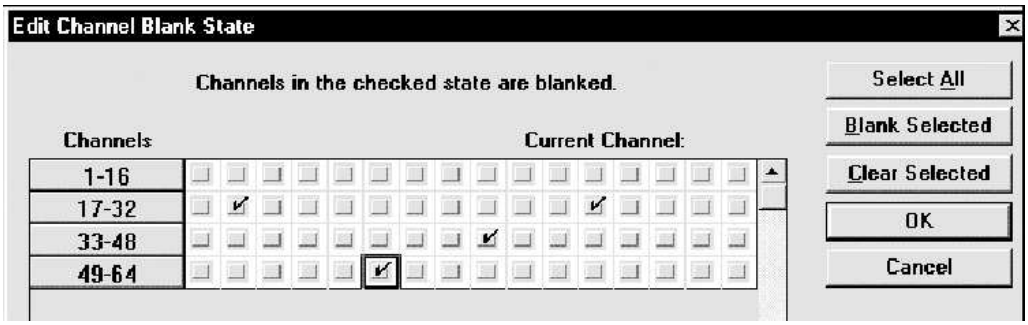

The Blank Selected/Clear Selected feature allows the user to select/clear rows of channels.

The OK button adds the new blanking additions to the Alignment screen.

The Cancel button voids the Edit changes.

5.4.4 Configuring the Scanning Method

The control module may be configured for one of four available scanning methods: straight, interlaced, edge, or skip.

Straight Scan is the default mode in which all beams are scanned in sequence from the bottom end (cable end) to the top end of the sensors.

Interlaced Scan alternates a straight scan with a slanted-beam scan. A slanted-beam scan begins with a beam established between the emitter's second channel and the receiver's first channel, and between the emitter's third channel and receiver's second channel, continuing up the array to the last emitter channel and next-to-last receiver channel. The last emitter channel is then reactivated to establish a beam to the last receiver channel to complete the scan. Alternating this slanted-beam scan with a straight scan improves optical resolution within the middle one-third of the scanning range.

Edge Scan activates only the beams located near the top edge of an object in the light screen. “Top edge” refers to the edge of the object passing nearest the top end of the sensors (i.e., the top of the light screen, farthest from the sensor’s cabled end). Each scan begins six beams prior to the last beam blocked during the previous scan. The scan continues from this point and moves upward to the first unblocked beam, where the scan is completed. When the array is clear, the system will execute straight scans. Edge Scan begins again when a blocked channel is detected. This scanning mode is designed to reduce sensing response time when measuring or locating only one edge of an object. Use of the Edge Scan mode limits the scan analysis mode selection to Last Beam Blocked (LBB).

Skip Scan reduces response time at the expense of decreased sensing resolution. Skip Scan mode allows from one to seven beams to be skipped during each scan. For example, with one beam skipped, only beams 1, 3, 5, 7, etc. will be interrogated. With two beams skipped, only 1, 4, 7, 10, etc. will be interrogated, and so on.

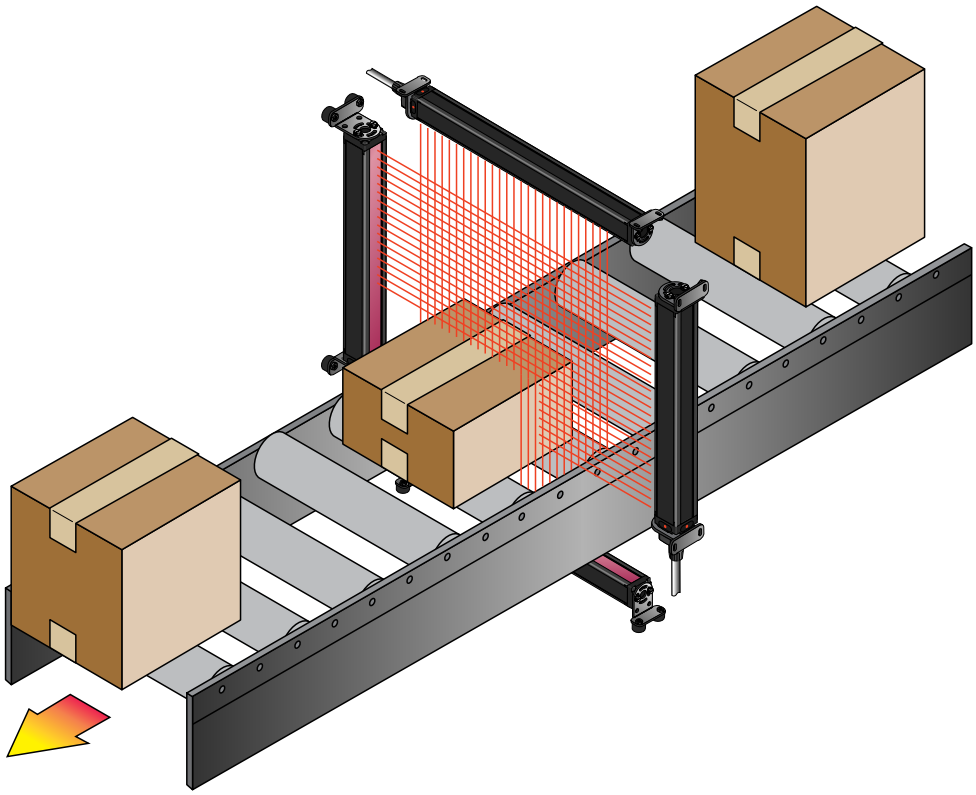

Figure 5. Interlaced scan improves optical resolution in the middle one-third of the scanning range.

5.4.5 Configuring the Control Mode

The controller can be configured for Continuous scanning, Gated scanning, or for Host mode. The module offers an optically-isolated Gate input, which is energized by application of 10 to 30 V dc. Gating is typically accomplished using a dc presence sensing device. Host mode allows the array to be gated by a host computer or programmable logic controller (PLC).

All MINI-ARRAY Systems can communicate with a host computer or controller via RS-232 serial protocol. In addition, controller models MAC-1, MACN-1, and MACP-1 also can communicate via RS-485. The host can direct the MINI-ARRAY System to scan on demand and/or receive the scan data directly from the MINI-ARRAY System in binary or ASCII form. Selectable communication baud rates are 9600, 19200, and 38400.

5.4.6 Configuring the Serial Communication

The MINI-ARRAY System can communicate with its host computer or controller via either RS-232 (all models) or RS-485 (MAC-1, MACN-1, MACP-1 models) serial protocol. The host can direct the MINI-ARRAY to scan on demand, and/or receive the scan data directly from the MINI-ARRAY System in Binary or ASCII form.

The selectable communication baud rates are 9600, 12000, and 38400. The communication protocol is one start bit, one stop bit, 8 data bits, and even parity.

When RS-485 communication is used, each controller module may be assigned a controller ID. Select letter A through O for individual identification of up to 15 Controllers on a RS-485 “party line.”

Configuring the Serial Transmission Format

Serial Transmission activates the serial port, specifies the data format, and provides data suppression options.

If **No Serial Communication** is selected (default), the serial port does not transmit sensing data.

ASCII Transmission specifies the scan data uses the ASCII format. ASCII Transmission has one suppression option, **Suppress Clear Data**, which sends data once when the array is completely clear (i.e., when no beams are blocked) and no further data is sent until one or more beams are blocked.

Binary Transmission specifies the scan data uses the binary format. The binary format has three suppression options:

- **Suppress Clear Data**: Sends data once when the array is completely clear (i.e., when no beams are blocked) and no further data is sent until one or more beams are blocked.
- **Suppress Header**: Reduces the size of the controller serial message by three bytes. Header bytes consist of the two byte start string plus the termination byte.
- **Compress Data**: Reduces the number of data bytes sent for each analysis mode from two to one byte.

5.4.7 PSF Assignment and Storage

The screens shown are for MAC-1, MACP-1, MACN-1, MACV-1, and MACI-1 Controllers. The screen layouts for MAC16N-1 and MAC16P-1 are functionally the same. PSF commands are located in the lower right corner of the **PSF Configuration** screen.

Sending a PSF to the Controller

After a PSF is configured, select **Send PSF** to send the PSF to the MINI-ARRAY controller. This command loads the PSF into the controller's non-volatile memory and automatically overwrites any existing PSF. The program confirms that the PSF was accepted or it will prompt for changes that are still required.

Retrieving a PSF from the Controller

To check the PSF loaded into the controller, select **Upload PSF**. The current PSF will be displayed on the **PSF Configuration** screen.

Downloading a PSF to Your Hard Drive

To download the PSF from the controller and save it to your hard drive, follow these steps.

1. Select **File Save PSF**.
2. When prompted to save the PSF to a file, select **Yes**.
   The **FileSave** pop-up window appears.
3. Overtype *.psf in the **File Name** entry box by entering the name of the file to be stored (up to 8 characters), plus the .psf extension.

   For example, type the name Inspect1.psf.
4. Select **OK** or press the **Enter** key.
   The PSF is stored on the selected drive (default is C:), and the program automatically returns to the **PSF Configuration** screen.

Uploading a PSF to the Controller

To upload a PSF from your hard drive to the controller, follow these steps.

1. Select **File Retrieve PSF**.
   The **FileBox** pop-up dialogue box appears.
2. Select the desired PSF from the **File Name** list.
3. and select **OK** or press the **Enter** key.
   The selected PSF loads on the **PSF Configuration** screen.
4. Click **Send PSF** to upload the file to the controller.

Analyzing the PSF Output Data

Follow these steps to view and analyze the output data generated by the PSF loaded into the controller.

1. Click **Execute**.
   The **Measurement Output** pop-up window appears.

2. Click **Run**.
   The table displays the status for the selected measurement mode(s), including the Present value, and the High and Low values for the Run period.
3. Select one of the following options.
   - Select **Stop** to freeze the data.
   - Select **Step** to initiate a single scan of the array. This simulates a “snapshot” of what is viewed by the array when **Step** is selected. **Step** simulates a gate input command.
   - **Run** simulates the **Continuous** scanning mode.
4. Click **Exit** to exit the **Measurement Output** screen.
5. To close the **PSF Configuration** screen, select either **Quit** or **Exit**.

Use the **Execute** command to test the response of a gated system.

6 Operating Instructions

6.1 Status Indicators for the MINI-ARRAY Sensors

Note: Status indicators appear to “freeze” if the controller has been configured for the Gate or the Host Mode and there is no signal to cause a scan update.

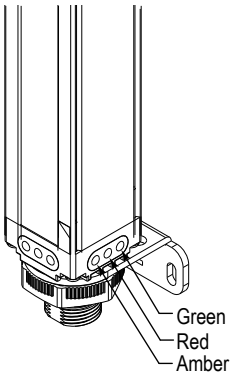

Figure 6. Receiver LEDs

Red On	Red Off	Red Flashing	Emitter Status
X			Emitter has power and is functioning properly.
	X		Emitter failure. The controller's red DIAG 3 indicator should come ON when the red LED on the emitter goes OFF. Run the Diagnostics software to determine the cause of the emitter failure.
		X	Emitter has momentarily lost and then regained power and is waiting for activity from the controller. This can occur in Gate or Host Mode after the emitter has been temporarily unplugged and then reconnected, but before the emitter receives its next gating command.

Green On	Green Flashing	Amber On	Red On	Receiver Status
X				Receiver is in proper alignment and no beams are broken.
	X			Receiver has momentarily lost and then regained power and is waiting for activity from the controller. This can occur in Gate or Host Mode after the receiver has been temporarily unplugged and then reconnected, but before the receiver receives its next gating command.
X		X		Marginal alignment. The MINI-ARRAY System continues to operate normally, but the amber comes ON as an early warning of possible signal loss due to gradual sensor misalignment and/or dirt buildup on the lenses, etc.
			X	Either one or more beams are blocked or the sensor is misaligned if the screen is clear of objects.
X		X	X	Receiver failure. Run the Diagnostics software to determine the cause of the receiver failure.

6.2 Status Indicators for the MACx-1 Series Controllers

Indicator	LED Color	Function
Output 1 (labeled OUT1, V out, I out, OUT or OUT 1 depending on model)	Red	Models MAC-1, MACP-1, MACN-1, MACV-1, MACI-1: displays the status of Output #1
		Models MAC16N-1 and MAC16P-1: displays the status that at least one output is active

Indicator	LED Color	Function
Alarm	Red	Models MAC-1, MACP-1, MACN-1, MACV-1, MACI-1: displays the status of Output #2. Output #2 may be assigned to an Analysis Mode or may be used as a system diagnostics Alarm, or as a Trigger alarm for gating another MINI-ARRAY System
		Models MAC16N-1 and MAC16P-1: displays the status of Output #16
Gate	Red	Displays the status of the Gate input
Align	Green	Indicates proper sensor alignment and a clear light screen; this indicator is ON when the green or green and yellow LEDs of the receiver are ON

Diag	LED	System Status						
		Normal Condition	Receiver Error	Emitter Error	Emitter/Receiver Mismatch	Controller Error	EEPROM Error	ROM/RAM Error
Diag 1	Green	On	On	On	On	Off	Off	Off
Diag 2	Red	Off	On	Off	On	On	Off	On
Diag 3	Red	Off	Off	On	On	Off	On	On

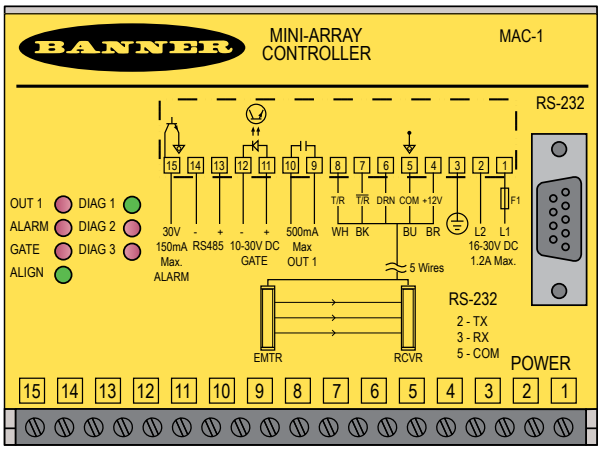

Figure 7. MAC-1 Controller Front Panel

6.3 Diagnostics Program

Emitter or receiver problems may be diagnosed using the diagnostics routine, which is included with the MINI-ARRAY software. Launch the program by selecting **Mini-Array** > **Diagnostics** or press F2.

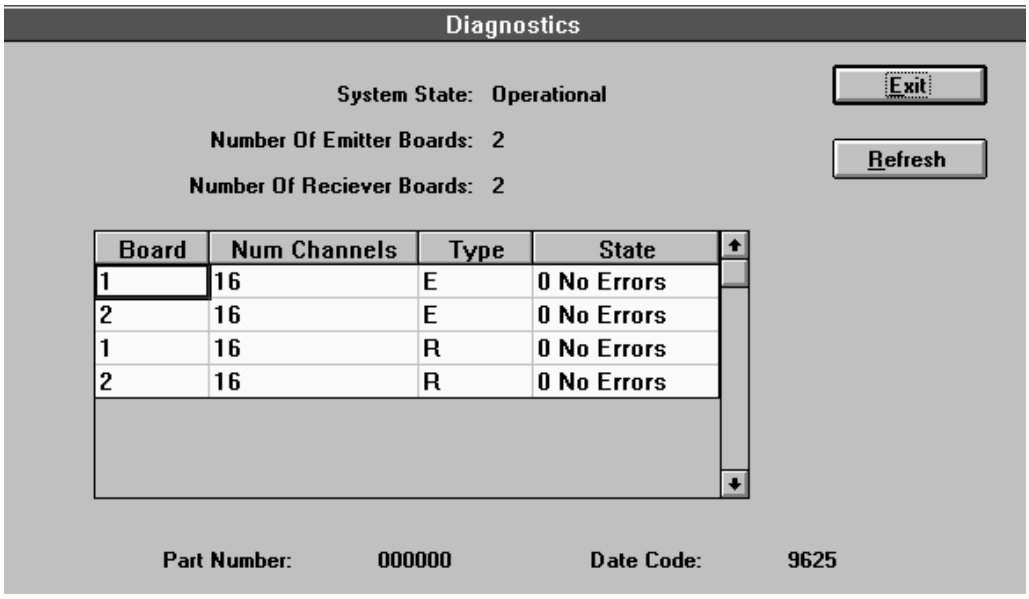

The Diagnostics screen displays the type of each emitter and receiver module (Board) and its functional status (State). If an error has occurred, the specific problem beam (Channel) will be identified. Additionally, if there is a problem with an emitter or receiver cable connection, a “No Response” message displays.

The Diagnostics routine also displays the part number and date code of the controller, which may be useful information if factory-assisted troubleshooting by telephone is required.

7 Additional Information

7.1 Host Mode Command

The MINI-ARRAY controller can communicate with a computer or PLC via either an RS-232 connection (all models) or RS-485 connection (discrete-output models). The host can respond to output from the controller when the controller is programmed for either the Continuous or Gate control mode.

Alternately, the host can control sensor scanning. When the Host control mode is selected, the host computer or controller initiates scans using a command string. The command string is a three-byte message, consisting of:

Control byte with decimal value 248
Controller ID (one of 16 ASCII letters A through O, as specified in the PSF)
Scan initiation byte (ASCII letter S)

The command string is further defined, as follows:

```
unsigned char msg[3]; /*declare three byte unsigned character array using C language*/
msg[0]=248; /*control byte*/
msg[1]=65; /*assume the controller ID is the letter A*/
msg[2]=83; /*scan initiation byte which is the ASCII letter S*/
```

The host transmits this three-byte message at the defined baud rate. The format is one start bit, one stop bit, even parity, and eight data bits. When this message is received by the MINI-ARRAY controller, the controller initiates a scan and updates its outputs as required. The MINI-ARRAY controller then waits for the next command string.

7.2 Serial Data Format

The programmed measurement mode or modes determine the type of information that is transmitted. For example, if Meas1 is set for FBB and Meas2 is set for LBB, then the data transmitted to the host contains the values of the first and last beam blocked.

The ALL measurement mode provides the status of all beams to the host. The VHS mode does not provide serial output data. In addition to measurement mode information, the data transmission also contains a start string and a termination byte. The start string consists of two unsigned character bytes:

Hex value 1C
The controller ID value

The termination byte is the ASCII character for a linefeed (hex value 0A). These three bytes are collectively called the Header.

7.3 ASCII Format Data Transmission

There are two ASCII formats. The one used depends upon which measurement modes are selected. For the ALL measurement mode, each data byte is presented in an eight bit ASCII format which conveys the status of four consecutive channels (four consecutive beams). Each subsequent byte conveys the status of the next four channels, until the status of all channels is reported.

The allowable data values are the ASCII numbers 0 to 9 and the ASCII letters A to F. In the table shown, the 0 represents a clear channel, and the 1 represents a blocked channel.

The other measurement modes use three ASCII bytes to represent their values. For example, if Meas1 is FBB and Meas2 is LBB, and the measured values are 6 and 120, and the controller ID is A, then the data string is as follows:

0x1c A 0 0 6 1 2 0 0x0a

The controller allows suppression of clear data. This means that data is sent one time when the array is completely clear (i.e., when no beams are blocked), and no further data is sent until one or more beams is blocked.

Definitions for ASCII Data Values For the ALL Measurement Mode				
Character	**Ch 4**	**Ch 3**	**Ch 2**	**Ch 1**
F	1	1	1	1
E	1	1	1	0
D	1	1	0	1

Definitions for ASCII Data Values For the ALL Measurement Mode				
Character	Ch 4	Ch 3	Ch 2	Ch 1
C	1	1	0	0
B	1	0	1	1
A	1	0	1	0
9	1	0	0	1
8	1	0	0	0
7	0	1	1	1
6	0	1	1	0
5	0	1	0	1
4	0	1	0	0
3	0	0	1	1
2	0	0	1	0
1	0	0	0	1
0	0	0	0	0

7.4 Binary Format Data Transmission

There are two binary formats. The one used depends upon which measurement modes are selected. For the ALL measurement mode, each data byte conveys the status of eight consecutive beams. Each bit of the byte is directly related to the status of an individual channel.

For example, if the first eight beams are as shown, then the data byte has the hex value of 0x2d or 45 decimal.

If the array has 32 optical channels, then there would be 4 data bytes representing the status of all 32 optical channels. The other measurement modes use two bytes to represent the measured value. The first of the two bytes is the most significant.

For example, the value of 262 for the **FBB** measurement mode is coded by the two-byte number: 0x01 0x06.

Channel	Status	Binary Code
1	Blocked	1
2	Clear	0
3	Blocked	1
4	Blocked	1
5	Clear	0
6	Blocked	1
7	Clear	0
8	Clear	0

Binary Transmission has three independent options. These options are independently selected and are used to custom-configure the serial data format.

- **Suppress Clear Data**—applicable when the sensor is unobstructed. While the sensor is blocked, serial data is transmitted; once the sensor is unobstructed, the “clear” data is transmitted once, and then no further data transmission occurs until the sensor is again blocked.
- **Suppress Header**—serially transmits the array data bytes. The three header bytes are not transmitted.
- **Compress Data**—affects the data bytes for the measurement modes excluding the ALL mode. Except for the ALL mode, the analysis modes use two bytes to transmit the appropriate information. For cases where the sensor cannot provide a result greater than 255, the Compress Data option will provide this data in one byte.

For example, assume that you have a 48-channel sensor with a last beam blocked of 35 and a controller ID of “B.” Assume two binary format options. The first option is the standard Binary Transmission format. The second format will use the Suppress Header and Compress Data options. The two strings would be as follows:

With Binary Transmission: 0x1c B 0x00 0x23 0x0a (a total of 5 bytes per scan)

With Binary Transmission, Suppress Header, Compress Data: 0x23 (1 byte per scan)

8 Accessories

8.1 Anti-Vibration Mounting Kits

MSVM-1

- 4 anti-vibration mounts (M4 × 0.7 × 9.5 mm)
- 8 M4 Keps nuts
- These mounts are made from BUNA-N rubber and are more resistant to chemicals and oils.

MAVM-1

- 4 anti-vibration mounts (M4 × 0.7 × 9.5 mm)
- 8 M4 Keps nuts
- These mounts are made from natural rubber, which are less chemically resistant than the MSVM-1 mounts, but have a greater sheer force spec at higher temperature.

9 Product Support and Maintenance

9.1 Contact Us

Banner Engineering Corp. headquarters is located at:

9714 Tenth Avenue North
Minneapolis, MN 55441, USA
Phone: + 1 888 373 6767

For worldwide locations and local representatives, visit *www.bannerengineering.com*.

9.2 Banner Engineering Corp. Limited Warranty

Banner Engineering Corp. warrants its products to be free from defects in material and workmanship for one year following the date of shipment. Banner Engineering Corp. will repair or replace, free of charge, any product of its manufacture which, at the time it is returned to the factory, is found to have been defective during the warranty period. This warranty does not cover damage or liability for misuse, abuse, or the improper application or installation of the Banner product.

THIS LIMITED WARRANTY IS EXCLUSIVE AND IN LIEU OF ALL OTHER WARRANTIES WHETHER EXPRESS OR IMPLIED (INCLUDING, WITHOUT LIMITATION, ANY WARRANTY OF MERCHANTABILITY OR FITNESS FOR A PARTICULAR PURPOSE), AND WHETHER ARISING UNDER COURSE OF PERFORMANCE, COURSE OF DEALING OR TRADE USAGE.

This Warranty is exclusive and limited to repair or, at the discretion of Banner Engineering Corp., replacement. **IN NO EVENT SHALL BANNER ENGINEERING CORP. BE LIABLE TO BUYER OR ANY OTHER PERSON OR ENTITY FOR ANY EXTRA COSTS, EXPENSES, LOSSES, LOSS OF PROFITS, OR ANY INCIDENTAL, CONSEQUENTIAL OR SPECIAL DAMAGES RESULTING FROM ANY PRODUCT DEFECT OR FROM THE USE OR INABILITY TO USE THE PRODUCT, WHETHER ARISING IN CONTRACT OR WARRANTY, STATUTE, TORT, STRICT LIABILITY, NEGLIGENCE, OR OTHERWISE.**

Banner Engineering Corp. reserves the right to change, modify or improve the design of the product without assuming any obligations or liabilities relating to any product previously manufactured by Banner Engineering Corp. Any misuse, abuse, or improper application or installation of this product or use of the product for personal protection applications when the product is identified as not intended for such purposes will void the product warranty. Any modifications to this product without prior express approval by Banner Engineering Corp will void the product warranties. All specifications published in this document are subject to change; Banner reserves the right to modify product specifications or update documentation at any time. Specifications and product information in English supersede that which is provided in any other language. For the most recent version of any documentation, refer to: *www.bannerengineering.com*.

For patent information, see *www.bannerengineering.com/patents*.