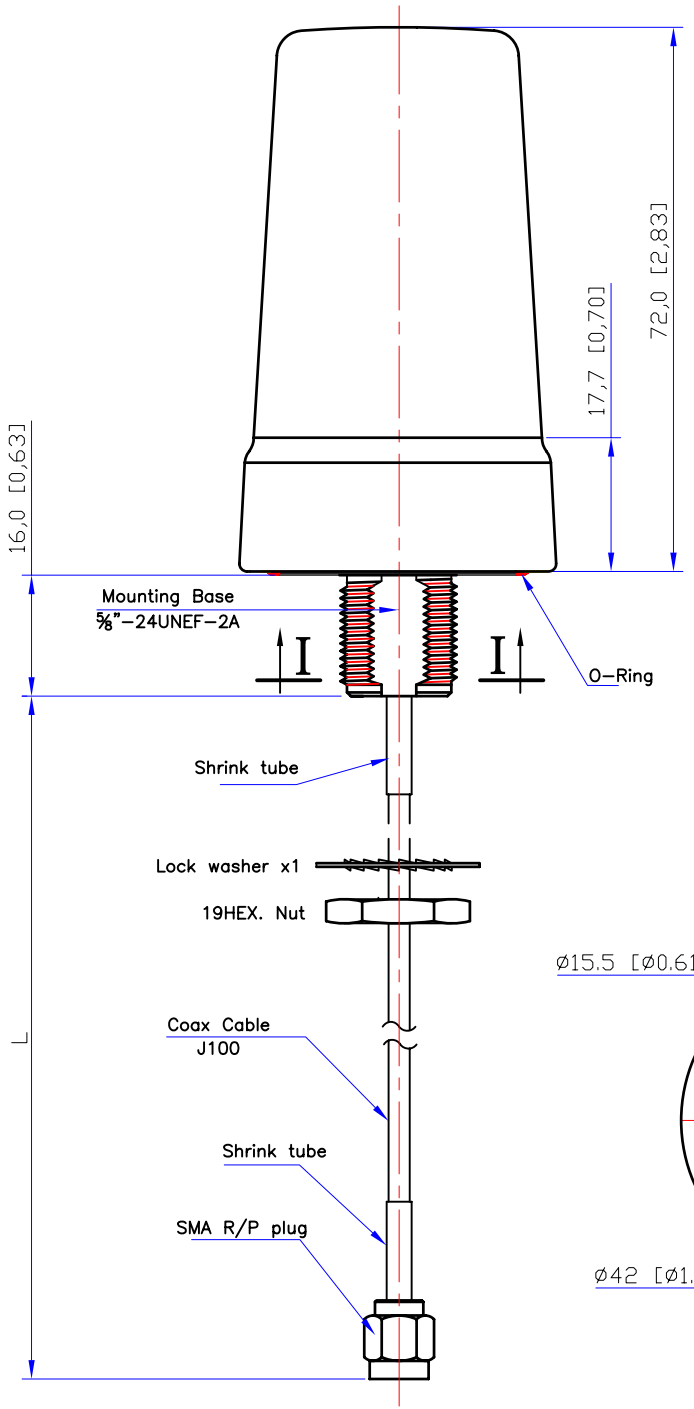

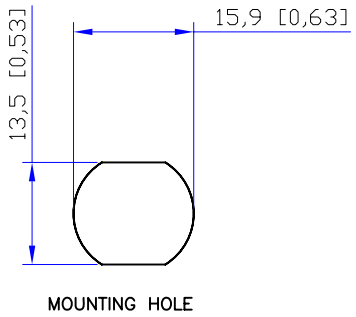

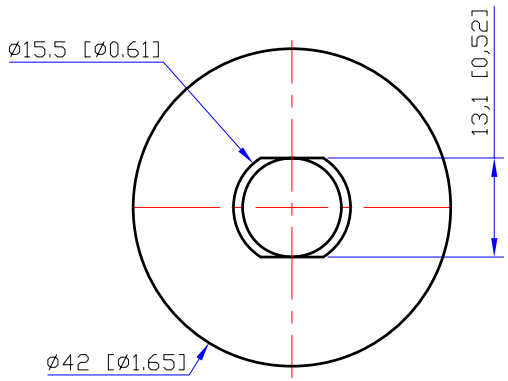

I — I

Electrical Properties:

Frequency Range:	2.4~2.5 GHz
Impedance:	50Ω nominal
VSWR:	<2.0:1
Gain:	2 dBi
Radiation:	Omni
Polarization:	Vertical

Mechanical Properties:

Cable:	J100 Low Loss Coax Cable
Cable Length:	L to be Specified in Inches
Connector:	SMA Reverse Polarity Plug
Material:	
Body:	Polycarbonate(Black)
Connector:	Brass with Gold plating
Operation Temp.:	−20°C to +65°C
Storage Temp.:	−30°C to +75°C

TITLE	2.4 GHz External Antenna 765 Model	Rev. Date 12/01/08	SHEET 1 OF 1
UNIT mm(In.)	DWG. NO.	S765FL-L-AH-2450	
SCALE none	NEARSON		

All rights reserved NEARSON INC. Specification is subject to change without notice.

http://www.nearson.com

ПРОМЭЛЕКТРОНИКА/ sales@prom-elec.com