MODEL NO.	"L"	P/N
PFS69S6T	1829 [72]	48027
PFS69S3T	4572 [180]	51772
PFS69S3T	914 [36]	61187
PFS69S2T	610 [24]	61198
PFS69S.8T	229 [9]	68649
PFS69S30T	9144 [360]	96108
PFS69S1.5T	457 [18]	93750

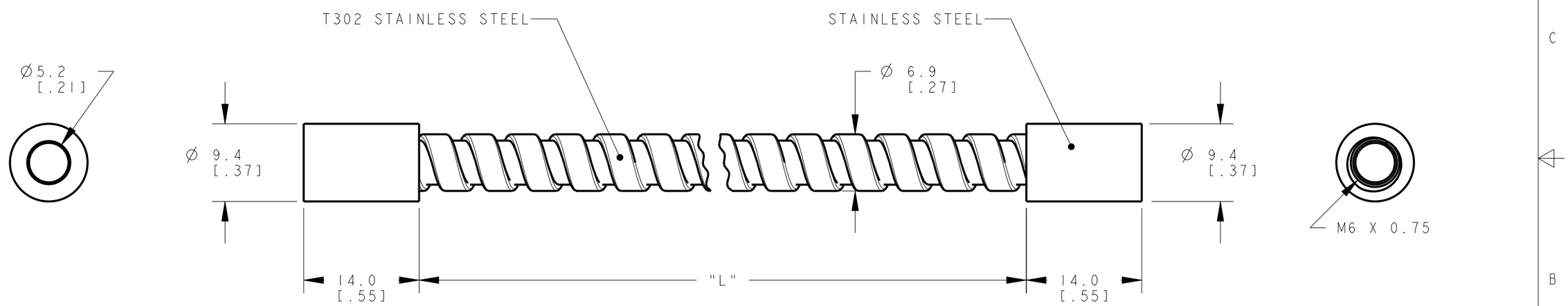

NOTES:
1. ALL DIMENSIONS ARE MILLIMETERS [INCHES] UNLESS OTHERWISE NOTED.
2. REFER TO "www.bannerengineering.com" FOR ADDITIONAL DATA AND SPECIFICATIONS.

This drawing is the property of BANNER ENGINEERING CORP. Any use or reproduction, in any form, without prior written permission of Banner is prohibited.
© 2015 Banner Engineering Corp.

THIRD ANGLE PROJECTION

BANNER ENGINEERING CORP.
www.bannerengineering.com

TITLE

PFS69S CONDUIT

SIZE	DRAWING NO.	REV.
B	192757	A
SCALE 2:1	SHEET 1 OF 1	

CREO

ПРОМЭЛЕКТРОНИКА/ sales@prom-elec.com