EZ-SCREEN® LP Basic Safety Light Curtain

Instruction Manual

Original Instructions
205790 Rev. C
3 February 2022
© Banner Engineering Corp. All rights reserved

205790

ПРОМЭЛЕКТРОНИКА/ sales@prom-elec.com

Contents

1 About This Document 4
1.1 Important... Read This Before Proceeding! 4
1.2 Use of Warnings and Cautions 4
1.3 EU Declaration of Conformity (DoC) 4
2 Standards and Regulations 5
2.1 Applicable U.S. Standards 5
2.2 OSHA Regulations 5
2.3 International/European Standards 5
3 Introduction 7
3.1 Features 7
3.2 Operating Features 7
3.3 System Description 7
3.3.1 Components 8
3.3.2 Standard Emitter and Receiver Models—14 mm Resolution 8
3.3.3 Standard Emitter and Receiver Models—25 mm Resolution 9
3.3.4 How to Order 9
3.4 Appropriate Applications and Limitations 9
3.4.1 Appropriate Applications 10
3.4.2 Examples: Inappropriate Applications 10
3.5 Control Reliability: Redundancy and Self-Checking 11
3.6 Specifications 11
3.6.1 General Specifications 11
3.6.2 Emitter Specifications 11
3.6.3 Receiver Specifications 12
4 Mechanical Installation 13
4.1 Mechanical Installation Considerations 13
4.2 Calculating the Safety Distance (Minimum Distance) 13
4.2.1 Formula and Examples 14
4.2.2 Examples 15
4.3 Reducing or Eliminating Pass-Through Hazards 15
4.4 Supplemental Safeguarding 16
4.5 Other Considerations 17
4.5.1 Adjacent Reflective Surfaces 17
4.5.2 Use of Corner Mirrors 19
4.5.3 Emitter and Receiver Orientation 20
4.5.4 Installation of Multiple Systems 21
4.6 Mounting System Components 22
4.6.1 Mounting Hardware 22
4.6.2 Sensor Mounting and Mechanical Alignment 28
4.6.3 Dimensions and Defined Area 29
5 Electrical Installation and Testing 32
5.1 Routing Cordsets 32
5.2 Initial Electrical Connections 33
5.3 Initial Checkout Procedure 33
5.3.1 Configuring the System for Initial Checkout 33
5.3.2 Initial Power-Up 34
5.3.3 Optical Alignment 34
5.3.4 Optical Alignment Procedure with Mirrors 36
5.3.5 Conduct a Trip Test 36
5.4 Electrical Connections to the Guarded Machine 37
5.4.1 Protective Stop (Safety Stop) Circuits 38
5.4.2 Output Signal Switching Devices (OSSDs) and External Device Monitoring (EDM) 38
5.4.3 Preparing for System Operation 39
5.4.4 Sensor Interchangeability 39
5.4.5 Commissioning Checkout 40
5.5 Reference Wiring Diagrams 41
5.5.1 Generic Emitter Wiring Diagram 42
5.5.2 Generic Receiver Wiring—Self-checking Safety Module, Safety Controller, Safety PLC 42
6 System Operation 43
6.1 Security Protocol 43
6.2 Status Indicators 43
6.2.1 Emitter 44
6.2.2 Receiver 44

6.2.3 Receiver Status Indicator Operation - Trip Output 44
6.3 Normal Operation 45
6.3.1 System Power-Up 45
6.3.2 Run Mode 45
6.4 Periodic Checkout Requirements 45
7 Checkout Procedures 46
7.1 Schedule of Checkouts 46
8 Accessories 47
8.1 Cordsets 47
8.1.1 Connection Options 47
8.1.2 RD to Flying Leads Cordsets 47
8.1.3 M12 to Flying Leads Cordsets 48
8.1.4 Splitter Cordsets 48
8.1.5 Male M12/Euro to Female M12/Euro QD Cordsets 49
8.1.6 DEE8-..D Adapter M12 QD Cordsets 50
8.1.7 Bulkhead Connector 50
8.2 Safety Controllers 50
8.3 Universal (Input) Safety Modules 51
8.4 Muting Module 51
8.5 Snap-On Lens Shields 51
8.6 EZ-LIGHT® for EZ-SCREEN® 51
8.7 MSA Series Stands 52
8.8 MSM Series Corner Mirrors 52
8.9 SSM Series Corner Mirrors 53
8.10 Brackets 54
8.11 Alignment Aids 55
9 Troubleshooting 56
9.1 Lockout Conditions 56
9.2 Recovery Procedures 56
9.2.1 Emitter Error Codes 56
9.2.2 Receiver Error Codes 57
9.3 Electrical and Optical Noise 57
9.3.1 Check for Sources of Electrical Noise 57
9.3.2 Check for Sources of Optical Noise 57
10 Product Support and Maintenance 59
10.1 Cleaning 59
10.2 Replacement Parts 59
10.3 Warranty Service 59
10.4 Manufacturing Date 59
10.5 Disposal 59
10.6 Literature 59
10.7 Contact Us 59
10.8 Banner Engineering Corp Limited Warranty 60
11 Glossary 61

1 About This Document

1.1 Important... Read This Before Proceeding!

It is the responsibility of the machine designer, controls engineer, machine builder, machine operator, and/or maintenance personnel or electrician to apply and maintain this device in full compliance with all applicable regulations and standards. The device can provide the required safeguarding function only if it is properly installed, properly operated, and properly maintained. This manual attempts to provide complete installation, operation, and maintenance instruction. *Reading the manual in its entirety is highly recommended to ensure proper understanding of the operation, installation, and maintenance.* Please direct any questions regarding the application or use of the device to Banner Engineering Corp..

For more information regarding U.S. and international institutions that provide safeguarding application and safeguarding device performance standards, see Standards and Regulations on page 5.

WARNING:
- The user is responsible for following these instructions.
- **Failure to follow any of these responsibilities may potentially create a dangerous condition that could result in serious injury or death.**
- Carefully read, understand, and comply with all instructions for this device.
- Perform a risk assessment that includes the specific machine guarding application. Guidance on a compliant methodology can be found in ISO 12100 or ANSI B11.0.
- Determine what safeguarding devices and methods are appropriate per the results of the risk assessment and implement per all applicable local, state, and national codes and regulations. See ISO 13849-1, ANSI B11.19, and/or other appropriate standards.
- Verify that the entire safeguarding system (including input devices, control systems, and output devices) is properly configured and installed, operational, and working as intended for the application.
- Periodically re-verify, as needed, that the entire safeguarding system is working as intended for the application.

1.2 Use of Warnings and Cautions

The precautions and statements used throughout this document are indicated by alert symbols and must be followed for the safe use of the EZ-SCREEN LP Basic Safety Light Curtain. Failure to follow all precautions and alerts may result in unsafe use or operation. The following signal words and alert symbols are defined as follows:

Signal Word	Definition	Symbol
WARNING:	**Warnings** refer to potentially hazardous situations which, if not avoided, could result in serious injury or death.	
CAUTION:	**Cautions** refer to potentially hazardous situations which, if not avoided, could result in minor or moderate injury.	

These statements are intended to inform the machine designer and manufacturer, the end user, and maintenance personnel, how to avoid misapplication and effectively apply the EZ-SCREEN LP Basic Safety Light Curtain to meet the various safeguarding application requirements. These individuals are responsible to read and abide by these statements.

1.3 EU Declaration of Conformity (DoC)

Banner Engineering Corp. herewith declares that these products are in conformity with the provisions of the listed directives and all essential health and safety requirements have been met. For the complete DoC, please go to www.bannerengineering.com.

Product	Directive
EZ-SCREEN LP Basic	2006/42/EC

Representative in EU: Spiros Lachandidis, Managing Director, Banner Engineering BV. Address: Park Lane, Culliganlaan 2F, bus 3,1831 Diegem, Belgium.

2 Standards and Regulations

The list of standards below is included as a convenience for users of this Banner device. Inclusion of the standards below does not imply that the device complies specifically with any standard, other than those specified in the Specifications section of this manual.

2.1 Applicable U.S. Standards

ANSI B11.0 Safety of Machinery, General Requirements, and Risk Assessment
ANSI B11.1 Mechanical Power Presses
ANSI B11.2 Hydraulic Power Presses
ANSI B11.3 Power Press Brakes
ANSI B11.4 Shears
ANSI B11.5 Iron Workers
ANSI B11.6 Lathes
ANSI B11.7 Cold Headers and Cold Formers
ANSI B11.8 Drilling, Milling, and Boring
ANSI B11.9 Grinding Machines
ANSI B11.10 Metal Sawing Machines
ANSI B11.11 Gear Cutting Machines
ANSI B11.12 Roll Forming and Roll Bending Machines
ANSI B11.13 Single- and Multiple-Spindle Automatic Bar and Chucking Machines
ANSI B11.14 Coil Slitting Machines
ANSI B11.15 Pipe, Tube, and Shape Bending Machines
ANSI B11.16 Metal Powder Compacting Presses
ANSI B11.17 Horizontal Extrusion Presses
ANSI B11.18 Machinery and Machine Systems for the Processing of Coiled Strip, Sheet, and Plate
ANSI B11.19 Performance Criteria for Safeguarding
ANSI B11.20 Manufacturing Systems
ANSI B11.21 Machine Tools Using Lasers
ANSI B11.22 Numerically Controlled Turning Machines
ANSI B11.23 Machining Centers
ANSI B11.24 Transfer Machines
ANSI/RIA R15.06 Safety Requirements for Industrial Robots and Robot Systems
NFPA 79 Electrical Standard for Industrial Machinery
ANSI/PMMI B155.1 Package Machinery and Packaging-Related Converting Machinery — Safety Requirements

2.2 OSHA Regulations

OSHA Documents listed are part of: Code of Federal Regulations Title 29, Parts 1900 to 1910
OSHA 29 CFR 1910.212 General Requirements for (Guarding of) All Machines
OSHA 29 CFR 1910.147 The Control of Hazardous Energy (lockout/tagout)
OSHA 29 CFR 1910.217 (Guarding of) Mechanical Power Presses

2.3 International/European Standards

EN ISO 12100 Safety of Machinery – General Principles for Design — Risk Assessment and Risk Reduction
ISO 13857 Safety of Machinery – Safety Distances to Prevent Hazard Zones Being Reached
ISO 13850 (EN 418) Emergency Stop Devices, Functional Aspects – Principles for Design
ISO 13851 Two-Hand Control Devices – Principles for Design and Selection
IEC 62061 Functional Safety of Safety-Related Electrical, Electronic and Programmable Control Systems
EN ISO 13849-1 Safety-Related Parts of Control Systems

EN 13855 (EN 999) The Positioning of Protective Equipment in Respect to Approach Speeds of Parts of the Human Body
ISO 14119 (EN 1088) Interlocking Devices Associated with Guards – Principles for Design and Selection
EN 60204-1 Electrical Equipment of Machines Part 1: General Requirements
IEC 61496 Electro-sensitive Protection Equipment
IEC 60529 Degrees of Protection Provided by Enclosures
IEC 60947-1 Low Voltage Switchgear – General Rules
IEC 60947-5-1 Low Voltage Switchgear – Electromechanical Control Circuit Devices
IEC 60947-5-5 Low Voltage Switchgear – Electrical Emergency Stop Device with Mechanical Latching Function
IEC 61508 Functional Safety of Electrical/Electronic/Programmable Electronic Safety-Related Systems
IEC 62046 Safety of Machinery – Applications of Protective Equipment to Detect the Presence of Persons
ISO 3691-4 Industrial Trucks—Safety Requirements and Verification, Part 4 Driverless Industrial trucks and their Systems

3 Introduction

3.1 Features

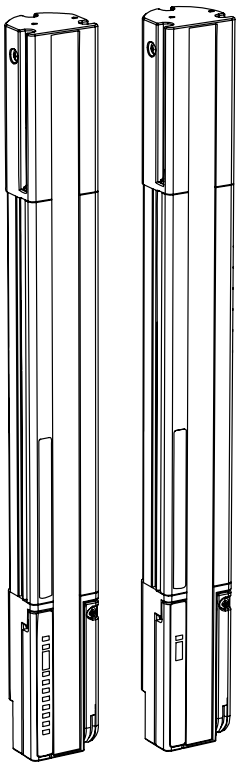

- A two-piece optoelectronic safeguarding device
- Creates a screen of synchronized, modulated infrared sensing beams that extend from end-to-end of the housing (no "dead" zone)
- Low-profile compact package for smaller production machines
- 14 mm or 25 mm resolutions
- Defined areas of 270 mm (10.6 in), 410 mm (16.1 in), 550 mm (21.6 in), and 690 mm (27.1 in)
- 100 mm to 4 m (4 in to 13 ft) sensing range
- Zone and Status indicators plus digital display to indicate number of beams blocked, detailed diagnostics
- FMEA tested to ensure control reliability
- Highly immune to EMI, RFI, ambient light, weld flash, and strobe light
- Safety PLC input compatible (per OSSD specifications)
- Rated IP54

3.2 Operating Features

The sensing resolution is determined by the emitter and receiver model.

WARNING:
- **Use of automatic (trip) or manual (latch) start/restart**
- Failure to follow these instructions could result in a serious injury or death.
- Applying power to the Banner Engineering Corp. device, clearing the defined area, or resetting a latch condition must not initiate dangerous machine motion. Design the machine control circuitry so that one or more initiation devices must be engaged to start the machine (a conscious act), in addition to the Banner Engineering Corp. device going into Run mode.

Emitter Wiring Options— An EZ-SCREEN LP Basic emitter can be connected either to its own power supply or to the receiver cable, color-for-color. The color-for-color wiring allows the emitter and receiver positions to be interchanged without rewiring.

Status Indicators—Status indicators on both the emitter and receiver are clearly visible on each sensor's front panel. See Status Indicators on page 43.

3.3 System Description

Note: This manual refers to an emitter, its receiver, and their cabling as "a System".

Banner EZ-SCREEN LP Basic emitters and receivers provide a redundant, microprocessor-controlled, opposed-mode optoelectronic "curtain of light", or "safety light screen". EZ-SCREEN LP Basic typically is used for point-of-operation safeguarding, and is suited to safeguard a variety of machinery.

The EZ-SCREEN LP Basic emitters have a row of synchronized modulated infrared (invisible) light-emitting diodes (LEDs) in a compact metal housing. Receivers have a corresponding row of synchronized photodetectors. The light screen created by the emitter and receiver is called the defined area; its width and height are determined by the length of the sensor pair and

the distance between them. The low-profile housing provides maximum sensing within minimum space; its defined area (sensing area) is equivalent to the height of the housing. The maximum sensing range is 4 m (13 ft), which decreases if corner mirrors are used. The sensing area extends from end to end of the housing; there is no “dead zone.”

In typical operation, if any part of an operator’s body (or any opaque object) of more than a pre-determined cross section is detected, the solid-state Output Signal Switching Device (OSSD) safety outputs turn OFF. These safety outputs are connected to the guarded machine’s Final Switching Devices (FSDs) that control the machine primary control elements (MPCEs), which immediately stop the motion of the guarded machine.

Electrical connections (power, ground, inputs, and outputs) are made via unique RD (removable disconnect) cordsets.

All models require a supply voltage of +24 V DC ±15%.

Both the emitter and the receiver feature 7-segment diagnostic displays and individual LEDs to provide continuous indication of operating status, configuration, and error conditions.

EZ-SCREEN LP Basic is extensively FMEA (Failure Mode and Effects Analysis) tested to establish an extremely high degree of confidence that, when appropriately installed, no system component will (even if it should fail) cause a failure to danger.

3.3.1 Components

An EZ-SCREEN LP Basic “System” refers to a compatible emitter and receiver (equal length and resolution; available separately or in pairs), and cordset(s) for each. Mounting hardware is ordered separately; special-purpose accessory brackets are also available.

Figure 1. Banner EZ-SCREEN LP Basic system: emitter, receiver, and two interconnecting cables

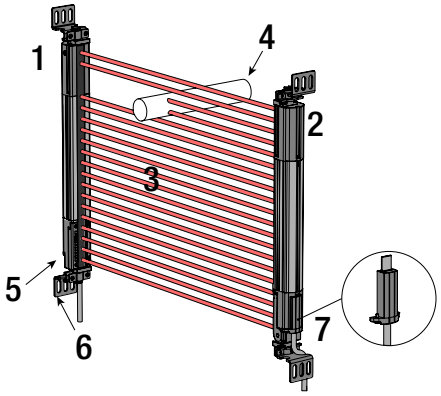

1. Receiver
2. Emitter
3. Defined area
4. Specified test piece
5. Status indicators are clearly visible on the sensor face
6. Mounting hardware (ordered separately)
7. RD cordset (ordered separately)

Models are sold without a factory installed RD cordset. All cordsets are ordered separately. The 13 mm (0.5 in) minimum bend radius for all installed cordsets accommodates low-clearance installations; cords can exit to left, right, or back of sensor, when mounting. The cabled QD option is useful to connect to splitter cables or other QD cordsets.

Figure 2. EZ-SCREEN LP Basic removable-disconnect (RD) cordsets



RD cordset (pigtail) with Euro-style QD termination; requires mating QD cordset for machine connection



RD cordset pivots 180° as it exits the housing; bends to fit against perpendicular surfaces

Standard models feature a yellow painted aluminum housing.

3.3.2 Standard Emitter and Receiver Models—14 mm Resolution

Only standard yellow housing models are listed. Order one machine interface cordset for each emitter or receiver; see Cordsets on page 47.

See www.bannerengineering.com or call Banner Engineering for the kit model numbering scheme.

Defined Area	Emitter	Receiver	Emitter/Receiver Pair	Connection	Response Time (ms)	# Beams
270 mm	**SLPVAE14-270**	**SLPVAR14-270**	**SLPVAP14-270**	300 mm cable, RD	10.5	27
410 mm	**SLPVAE14-410**	**SLPVAR14-410**	**SLPVAP14-410**		13.5	41
550 mm	**SLPVAE14-550**	**SLPVAR14-550**	**SLPVAP14-550**		16.5	55
690 mm	**SLPVAE14-690**	**SLPVAR14-690**	**SLPVAP14-690**		19.5	69

3.3.3 Standard Emitter and Receiver Models—25 mm Resolution

Only standard yellow housing models are listed. Order one machine interface cordset for each emitter or receiver; see Cordsets on page 47.

See www.bannerengineering.com or call Banner Engineering for kit model numbering scheme.

Defined Area	Emitter	Receiver	Emitter/Receiver Pair	Connection	Response Time (ms)	# Beams
270 mm	**SLPVAE25-270**	**SLPVAR25-270**	**SLPVAP25-270**	300 mm cable, RD	8	14
410 mm	**SLPVAE25-410**	**SLPVAR25-410**	**SLPVAP25-410**		9.5	21
550 mm	**SLPVAE25-550**	**SLPVAR25-550**	**SLPVAP25-550**		11	28
690 mm	**SLPVAE25-690**	**SLPVAR25-690**	**SLPVAP25-690**		12.5	35

3.3.4 How to Order

1. Choose the model resolution (14 or 25 mm).
2. Choose an Emitter (E), a Receiver (R), or a Pair (P).
3. Choose one RD cordset for each sensor or two RD cordsets for a pair. See Cordsets on page 47.
4. Choose appropriate mounting hardware. See Brackets on page 54.

3.4 Appropriate Applications and Limitations



WARNING:

- **Read this Section Carefully Before Installing the System**
- **Failure to follow these instructions could result in serious injury or death.**
- If all mounting, installation, interfacing, and checkout procedures are not followed properly, this Banner Engineering Corp. device cannot provide the protection for which it was designed.
- The user is responsible for ensuring that all local, state, and national laws, rules, codes, or regulations relating to the installation and use of this control system in any particular application are satisfied. Ensure that all legal requirements have been met and that all technical installation and maintenance instructions contained in this manual are followed.
- The user has the sole responsibility to ensure that this Banner Engineering Corp. device is installed and interfaced to the guarded machine by Qualified Persons, in accordance with this manual and applicable safety regulations. A Qualified person is a person who, by possession of a recognized degree or certificate of professional training, or who, by extensive knowledge, training and experience, has successfully demonstrated the ability to solve problems relating to the subject matter and work.

The Banner EZ-SCREEN LP Basic is intended for point-of-operation machine guarding and other safeguarding applications. It is the user's responsibility to verify whether the safeguarding is appropriate for the application and is installed, as instructed by this manual, by a Qualified Person.

The EZ-SCREEN LP Basic ability to perform its safeguarding function depends upon the appropriateness of the application and upon its proper mechanical and electrical installation and interfacing to the guarded machine. **If all mounting, installation, interfacing, and checkout procedures are not followed properly, the EZ-SCREEN LP Basic cannot provide the protection for which it was designed**.

WARNING:
- **Install System Only on Appropriate Applications**
- Failure to follow these instructions could result in serious injury or death.
- Use Banner's EZ-SCREEN LP Basic only on machinery that can be stopped immediately after a stop signal is issued at any point in the machine's stroke or cycle, such as part-revolution clutched machines. Under no circumstances may the EZ-SCREEN LP Basic be used on full-revolution clutched machinery or in unsuitable applications.
- If there is any doubt about whether or not your machinery is compatible with the EZ-SCREEN LP Basic, contact Banner Engineering.

3.4.1 Appropriate Applications

EZ-SCREEN LP Basic is typically used for, but is not limited to, the following applications:

- Small assembly equipment
- Automated production equipment
- Robotic work cells
- Molding presses
- Assembly and packaging machines
- Lean manufacturing systems

Figure 3. Typical Application

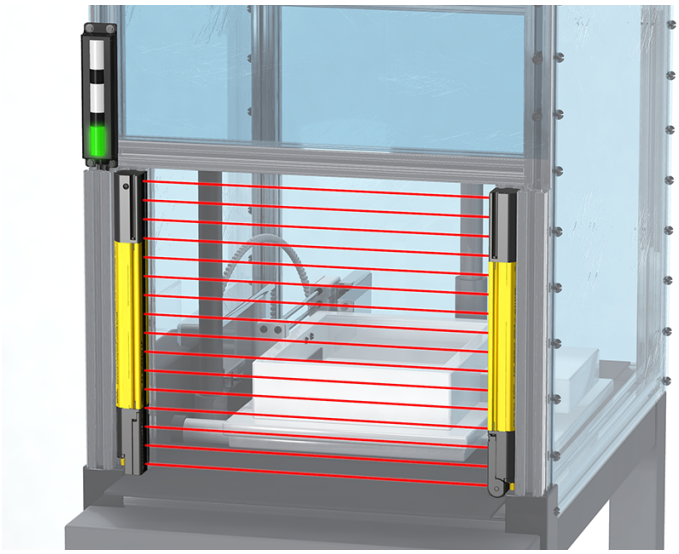

3.4.2 Examples: Inappropriate Applications

Do not use EZ-SCREEN LP Basic in the following applications:

- With any machine that cannot be stopped immediately after a stop signal is issued, such as single-stroke (or full-revolution) clutched machinery
- With any machine with inadequate or inconsistent machine response time and stopping performance
- With any machine that ejects materials or component parts through the defined area
- In any environment that is likely to adversely affect photoelectric sensing efficiency. For example, corrosive chemicals or fluids or unusually severe levels of smoke or dust, if not controlled, may degrade sensing efficiency
- As a tripping device to initiate or reinitiate machine motion (PSDI applications), unless the machine and its control system fully comply with the relevant standard or regulation (see OSHA 29CFR1910.217, NFPA 79, ANSI B11.19, ISO 12100, IEC 60204-1, IEC 61496-1, or other appropriate standard)

If an EZ-SCREEN LP Basic is installed for use as a perimeter guard (where a pass-through hazard may exist, see Reducing or Eliminating Pass-Through Hazards on page 15), the dangerous machine motion can be initiated by normal means only after the safeguarded area is clear of individuals and the external monitoring device has been reset.

3.5 Control Reliability: Redundancy and Self-Checking

Redundancy requires that EZ-SCREEN LP Basic circuit components be backed up to the extent that, if the failure of a single component will prevent effective machine stopping action when needed, that component must have a redundant counterpart which will perform the same function. The EZ-SCREEN LP Basic is designed with redundant microprocessors.

Redundancy must be maintained whenever the EZ-SCREEN LP Basic is in operation. Because a redundant system is no longer redundant after a component has failed, EZ-SCREEN LP Basic is designed to monitor itself continuously. A component failure detected by or within the self-checking system causes a stop signal to be sent to the guarded machine and puts the EZ-SCREEN LP Basic into a Lockout condition.

A recovery from this type of Lockout condition requires:

- Replacement of the failed component (to restore redundancy)
- The appropriate reset procedure

The Diagnostic Display is used to diagnose causes of a Lockout condition. See Troubleshooting on page 56.

3.6 Specifications

3.6.1 General Specifications

Short Circuit Protection
All inputs and outputs are protected from short circuits to +24 V DC or DC common

Electrical Safety Class
III (per IEC 61140: 1997)

Safety Ratings
Type 4 per IEC 61496-1, -2
Category 4 PL e per EN ISO13849-1
SIL3 per IEC 61508; SIL CL3 per IEC 62061
PFHd (1/hr) = 4 x 10^{-9}
$MTTF_d$ (yrs) = 39

Operating Range
0.1 m to 4 m (4 in to 13 ft) — Range decreases with use of mirrors and/or lens shields:
- Lens shields — approx 10% less range per shield
- Glass-surface mirrors — approx 8% less range per mirror

See the specific mirror datasheet for more information.

Resolution
14 mm or 25 mm, depending on model

Effective Aperture Angle (EAA)
Meets Type 4 requirements per IEC 61496-2
±2.5° at 3 m

Operating Conditions
0 °C to +55 °C (+32 °F to +131 °F)
95% maximum relative humidity (non-condensing)

Enclosure
Extruded aluminum housing with yellow polyester powder finish standard and well-sealed, rugged die-cast zinc end caps, acrylic lens cover, copolyester access cover
Optional clear anodized or static-dissipative nickel-plated finish available. Nickel-plated models also have static-dissipative acrylic lens cover and nickel-plated end caps.

Environmental Rating
IP54

Shock and Vibration
Components have passed vibration and shock tests according to IEC 61496-1. This includes vibration (10 cycles) of 10-55 Hz at 0.35 mm (0.014 in) single amplitude (0.70 mm peak-to-peak) and shock of 10 g for 16 milliseconds (6,000 cycles).

Cables and Connections
See Cordsets on page 47 for recommended cables. If other cables are used with the EZ-SCREEN LP Basic, the user must verify suitability of these cables for each application.

Certifications

3.6.2 Emitter Specifications

Supply Voltage at the Device
24 V DC ±15% (use a SELV-rated power supply according to EN IEC 60950). The external voltage supply must be capable of buffering brief mains interruptions of 20 ms, as specified in IEC/EN 60204-1.

Residual Ripple
± 10% maximum

Supply Current
60 mA maximum

Status Indicators
One bi-color (Red/Green) Status Indicator: indicates operating mode, lockout or power Off condition
7-Segment Diagnostic indicator (1 digit): indicates proper operation, scan code, or error code

Wavelength of Emitter Elements
Infrared LEDs, 850 nm at peak emission

3.6.3 Receiver Specifications

Supply Voltage at the Device

24 V DC ±15% (use a SELV-rated power supply according to EN IEC 60950). The external voltage supply must be capable of buffering brief mains interruptions of 20 ms, as specified in IEC/EN 60204-1.

Residual Ripple

±10% maximum

Supply Current (no load)

150 mA maximum, exclusive of OSSD1 and OSSD2 loads (up to additional 0.5 A each)

Response Time

Dependent on the number of sensing beams; see the models table for the number of beams and response time.

Recovery Time

Blocked to Clear (OSSDs turn On; varies with total number of sensing beams and whether Sync beam is blocked):

Model	Beam 1 (Sync Beam)	All Other Beams
14 mm	109 ms to 800 ms	33 ms to 220 ms
25 mm	81 ms to 495 ms	25 ms to 152 ms

Output Signal Switching Devices (OSSDs)

Two redundant solid-state 24 V dc, 0.5 A max. sourcing OSSD (Output Signal Switching Device) safety outputs. (Use optional interface modules for ac or larger dc loads.)
ON-State voltage: ≥ Vin-1.5 V DC
OFF-State voltage: 1.2 V DC maximum (0 to 1.2 V DC)
Maximum load capacitance: 1.0 µF
Minimum load inductance: 10 H
Leakage current: 0.50 mA maximum
OSSD test pulse width: 100 to 300 microseconds typical
OSSD test pulse period: 10 ms to 22 ms (varies with number of beams)
Switching current: 0 to 0.5 A

Status Indicators

Amber Indicator: indicates whether the System is ready for operation
Bi-color (red/green) Status indicator: indicates general system and output status
Bi-color (red/green) Zone Status indicators: indicate condition (clear or blocked beam) of a defined group of beams
7-Segment Diagnostic indicator (1 digit): indicates proper operation, scan code, error code, or total number of blocked beams

Ambient Light Immunity

>10,000 lux at 5° angle of incidence

Strobe Light Immunity

Totally immune to one Federal Signal Corp. "Fireball" model FB2PST strobe

4 Mechanical Installation

The EZ-SCREEN LP Basic system performance as a safety guarding device depends on:

- The suitability of the application
- The proper mechanical and electrical installation and interfacing to the guarded machine

WARNING:

- **Read this Section Carefully Before Installing the System**
- **Failure to follow these instructions could result in serious injury or death.**
- If all mounting, installation, interfacing, and checkout procedures are not followed properly, this Banner Engineering Corp. device cannot provide the protection for which it was designed.
- The user is responsible for ensuring that all local, state, and national laws, rules, codes, or regulations relating to the installation and use of this control system in any particular application are satisfied. Ensure that all legal requirements have been met and that all technical installation and maintenance instructions contained in this manual are followed.
- The user has the sole responsibility to ensure that this Banner Engineering Corp. device is installed and interfaced to the guarded machine by Qualified Persons, in accordance with this manual and applicable safety regulations. A Qualified person is a person who, by possession of a recognized degree or certificate of professional training, or who, by extensive knowledge, training and experience, has successfully demonstrated the ability to solve problems relating to the subject matter and work.

4.1 Mechanical Installation Considerations

The two primary factors that influence the layout of the EZ-SCREEN LP Basic system mechanical installation are:

- Safety Distance (Minimum Distance) (see Calculating the Safety Distance (Minimum Distance) on page 13)
- Supplemental safeguarding/eliminating pass-through hazards (see Reducing or Eliminating Pass-Through Hazards on page 15)

Other considerations include:

- Emitter and Receiver Orientation (see Emitter and Receiver Orientation on page 20)
- Adjacent Reflective Surfaces (see Adjacent Reflective Surfaces on page 17)
- Use of Corner Mirrors (see Use of Corner Mirrors on page 19)
- Installation of Multiple Systems (see Installation of Multiple Systems on page 21)

WARNING:

- **Position the System Components Carefully**
- Failure to observe this warning could result in serious injury or death.
- Position the system components such that the hazard cannot be accessed by reaching over, under, around, or through the sensing field. Additional and supplemental guarding may be required.

4.2 Calculating the Safety Distance (Minimum Distance)

Safety Distance (Ds), also called Minimum Distance (S), is the minimum distance required between the defined area and the closest reachable hazard point. The distance is calculated so that when an object or a person is detected (by blocking a sensing beam), the EZ-SCREEN LP Basic sends a stop signal to the machine, causing it to stop by the time the object or person can reach any machine hazard point.

The distance is calculated differently for U.S. and European installations. Both methods take into account several factors, including a calculated human speed, the total system stopping time (which itself has several components), and the depth penetration factor. After the distance has been determined, record the calculated distance on the Daily Checkout Card.

WARNING:

- **Calculate the Safety Distance (Minimum Distance)**
- Failure to establish and maintain the safety distance (minimum distance) could result in serious injury or death.
- Mount the components at a distance from the nearest hazard such that an individual cannot reach the hazard before cessation of the hazardous motion or situation. Calculate this distance using the supplied formulas, as described by ANSI B11.19 and ISO 13855. Mount the components more than 100 mm (4 in) away from the hazard, regardless of the calculated value.

Figure 4. Safety distance (minimum distance) and hard (fixed) guarding

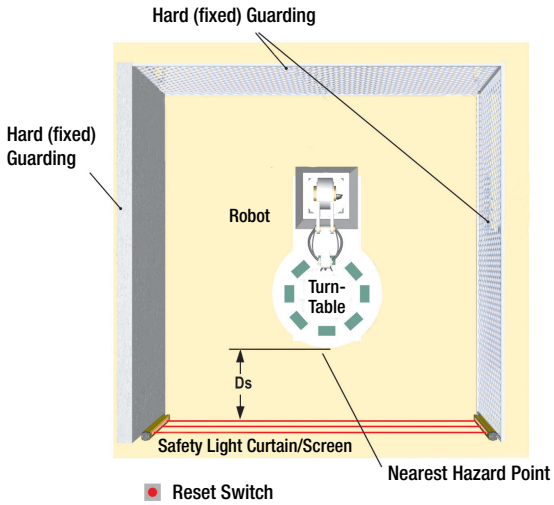

4.2.1 Formula and Examples

U.S. Applications	European Applications
The Safety (Separation) Distance formula for U.S. applications:	The Minimum Distance formula for European applications:
`Ds = K × (Ts + Tr) + Dpf`	`S = (K × T) + C`

Ds

the Safety Distance, in inches

K

1600 mm per second (or 63 in per second), the OSHA 29CFR1910.217, and ANSI B11.19 recommended hand-speed constant (see Note 1 below)

Ts

the overall stop time of the machine (in seconds) from the initial stop signal to the final ceasing of all motion, including stop times of all relevant control elements (for example, IM-T-.. Interface Modules) and measured at maximum machine velocity (see Note 3 below)

Tr

the maximum response time, in seconds, of the EZ-SCREEN LP Basic emitter/receiver pair (depending on model)

Dpf

the added distance due to the depth penetration factor as prescribed in OSHA 29CFR1910.217, and ANSI B11.19 for U.S. applications. See Depth Penetration Factor (Dpf) table below or calculate using the formula (in mm): Dpf = 3.4 × (S – 7) where S is the resolution of the light curtain (for S ≤ 63 mm).

S

the Minimum Distance, in mm, from danger zone to light screen center line; minimum allowable distance is 100 mm (175 mm for non-industrial applications), regardless of calculated value

K

hand-speed constant (see Note 2 below); **2000 mm/s** (for Minimum Distances ≤ 500 mm) **1600 mm/s** (for Minimum Distances > 500 mm)

T

the overall machine stopping response time (in seconds), from the physical initiation of the safety device and the machine coming to a stop (or the hazard removed). This can be broken down into two parts: **Ts** and **Tr** where **T** = **Ts** + **Tr**

C

the additional distance, in mm, based on intrusion of a hand or object towards the danger zone prior to actuation of a safety device. Calculate using the formula (in mm):

`C = 8 × (d – 14)`

where `d` is the resolution of the light curtain (for `d` ≤ 40 mm), or use 850 mm for C.

U.S. Applications	European Applications

Table 1: Depth Penetration Factor (Dpf)

Depth Penetration Factor (Dpf)	
14 mm Systems	**25 mm Systems**
24 mm (0.94 in)	61 mm (2.4 in)

Notes:

1. The OSHA-recommended hand speed constant **K** has been determined by various studies and, although these studies indicate speeds of 1600 mm/sec. (63 in/sec.) to more than 2500 mm/sec. (100 in/sec.), they are not conclusive determinations. Consider all factors, including the physical ability of the operator, when determining the value of **K** to be used.
2. The recommended hand speed constant **K**, derived from data on approach speeds of the body or parts of the body as stated in ISO 13855.
3. **Ts** is usually measured by a stop-time measuring device. If the machine manufacturer's specified stop time is used, at least 20% should be added to allow for possible clutch/ brake system deterioration. This measurement must take into account the slower of the two MPCE channels, and the response time of all devices or controls that react to stop the machine.

WARNING:

- **Stop time (Ts) must include the response time of all devices or controls that react to stop the machine**
- If all devices are not included, the calculated safety distance (Ds or S) will be too short, which can lead to serious injury or death.
- Include the stop time of all relevant devices and controls in your calculations.
- If required, each of the two machine primary control elements (MPCE1 and MPCE2) must be capable of immediately stopping the dangerous machine motion, regardless of the state of the other. These two channels of machine control need not be identical, but the stop time performance of the machine (Ts, used to calculate the safety distance) must take into account the slower of the two channels.

4.2.2 Examples

Example: U.S. Applications, Model

K = 63 in. per second (the hand speed constant set by OSHA)

Ts = 0.32 (0.250 second is specified by the machine manufacturer; plus 20% safety factor; plus 20 ms for interface module IM-T-9A response time)

Tr = 0.0105 seconds (the specified response time of an SLPVAP14-270 EZ-SCREEN LP Basic)

Dpf = 0.94 in (14 mm resolution)

Substitute the numbers into the formula as follows:

```
Ds = K × ( Ts + Tr ) + Dpf
```

Mount the EZ-SCREEN LP Basic emitter and receiver so that no part of the defined area will be closer than 21.8 inches to the closest reachable hazard point on the guarded machine.

Example: European Applications, Model

K = 1600 mm per second

T = 0.33 (0.250 second specified by machine manufacturer; plus 20% safety factor; plus 20 ms interface module response time), plus 0.0105 seconds (the specified **SLPVAP14-270** response time)

C = 8 × (14 – 14) = 0 mm (14 mm resolution)

Substitute the numbers into the formula as follows:

```
S = (K × T ) + C
```

Mount the EZ-SCREEN LP Basic emitter and receiver so that no part of the defined area will be closer than 528 mm to the closest reachable hazard point on the guarded machine.

4.3 Reducing or Eliminating Pass-Through Hazards

A *pass-through* hazard is associated with applications where personnel may pass through a safeguard, such as the EZ-SCREEN LP Basic Safety Light Curtain (which issues a stop command to remove the hazard), and then continues into the guarded area. This is common in access and perimeter guarding applications. Subsequently, their presence is no longer detected, and the related danger becomes the unexpected start or restart of the machine while personnel are within the guarded area.

A pass-through hazard typically results from large safety distances calculated from long stopping times, large minimum object sensitivities, reach-over, reach-through, or other installation considerations. A pass-through hazard can be generated with as little as 75 mm (3 in) between the sensing field and the machine frame or hard (fixed) guarding.

Eliminate or reduce pass-through hazards whenever possible. While it is recommended to eliminate the pass-through hazard altogether, this may not be possible due to machine layout, machine capabilities, or other application considerations.

One solution is to ensure that personnel are continually sensed while within the hazardous area. This can be accomplished by using supplemental safeguarding, such as described by the safety requirements in ANSI B11.19 or other appropriate standards.

An alternative method is to ensure that once the safeguarding device is tripped it will latch and will require a deliberate manual action to reset. This method of safeguarding relies upon the location of the reset switch as well as safe work practices and procedures to prevent an unexpected start or restart of the guarded machine. The EZ-SCREEN LP Basic Safety Light Curtain provides a configurable Manual Start/Restart (Latch Output) function for these applications.

WARNING:
- **Use of the Banner device for Access or Perimeter Guarding**
- Failure to observe this warning could result in serious injury or death.
- If a Banner device is installed in an application that results in a pass-through hazard (for example, perimeter guarding), either the Banner device or the Machine Primary Control Elements (MPCEs) of the guarded machine must cause a Latched response following an interruption of the defined area.
- The reset of this Latched condition may only be achieved by actuating a reset switch that is separate from the normal means of machine cycle initiation.

WARNING:
- **Perimeter guarding applications**
- Failure to observe this warning could result in serious injury or death.
- Use lockout/tagout procedures per ANSI Z244.1, or use additional safeguarding as described by ANSI B11.19 safety requirements or other applicable standards if a passthrough hazard cannot be eliminated or reduced to an acceptable level of risk.

4.4 Supplemental Safeguarding

As described in Calculating the Safety Distance (Minimum Distance) on page 13, properly position the EZ-SCREEN LP Basic such that an individual cannot reach through the defined area and access the hazard point before the machine has stopped.

Additionally, the hazard cannot be accessible by reaching around, under, or over the defined area. To accomplish this, supplemental guarding (mechanical barriers, such as screens or bars), as described by ANSI B11.19 safety requirements or other appropriate standards, must be installed. Access will then be possible only through the defined area of the EZ-SCREEN LP Basic System or through other safeguarding that prevents access to the hazard (see Figure 5 on page 17).

The mechanical barriers used for this purpose are typically called "hard (fixed) guarding"; there must be no gaps between the hard (fixed) guarding and the defined area. Any openings in the hard (fixed) guarding must comply with the safe opening requirements of ANSI B11.19 or other appropriate standard.

Figure 5. An example of supplemental safeguarding

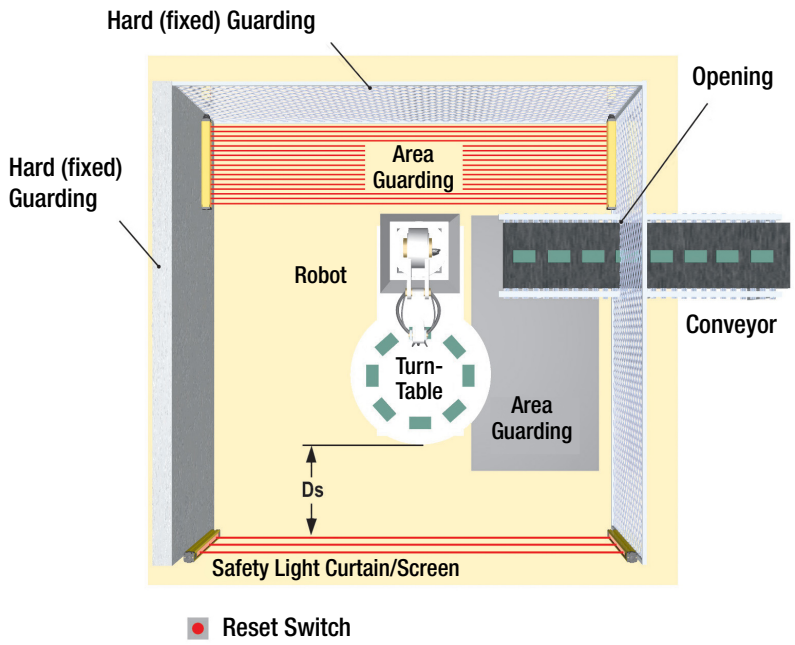

Figure 5 on page 17 shows an example of supplemental safeguarding inside a robotic work cell. The EZ-SCREEN LP Basic, in conjunction with the hard (fixed) guarding, is the primary safeguard. Supplemental safeguarding (such as a horizontal-mounted safety light screen as an area guard) is required in areas that cannot be viewed from the reset switch (for example, behind the robot and the conveyor). Additional supplemental safeguarding may be required to prevent clearance or trapping hazards (for example, a safety mat as an area guard between the robot, the turntable, and the conveyor).

WARNING:
- **The hazard must be accessible only through the sensing field**
- Incorrect system installation could result in serious injury or death.
- The installation of the EZ-SCREEN LP Basic must prevent any individual from reaching around, under, over or through the defined area and into the hazard without being detected.
- See OSHA CFR 1910.217, ANSI B11.19, and/or ISO 14119, ISO 14120 and ISO 13857 for information on determining safety distances and safe opening sizes for your guarding device. Mechanical barriers (for example, hard (fixed) guarding) or supplemental safeguarding might be required to comply with these requirements.

4.5 Other Considerations

4.5.1 Adjacent Reflective Surfaces

A reflective surface located adjacent to the defined area may deflect one or more beams around an object in the defined area. In the worst case, an optical short circuit may occur, allowing an object to pass undetected through the defined area.

WARNING:
- **Do not install the system near reflective surfaces**
- Reflective surfaces could reflect the sensing beam(s) around an object or person within the defined area, preventing detection by the system. Failure to prevent reflection problems results in incomplete guarding and an optical short circuit that could result in serious injury or death.
- Do not locate the defined area near a reflective surface. Perform the trip test, as described in the product documentation, to detect such reflection(s).

This reflective surface may result from shiny surfaces or glossy paint on the machine, the workpiece, the work surface, the floor, or the walls. Beams deflected by reflective surfaces are discovered by performing the trip test and the periodic checkout procedures. To eliminate problem reflections:

- If possible, relocate the sensors to move the beams away from the reflective surface(s), being careful to maintain adequate separation distance
- Otherwise, if possible, paint, mask, or roughen the shiny surface to reduce its reflectivity
- Where these are not possible (as with a shiny workpiece or machine frame), determine the worst-case resolution resulting from the optical short circuit and use the corresponding depth penetration factor (Dpf or C) in the Safety Distance (Minimum Distance) formula; or mount the sensors in such a way that the receiver's field of view and/or the emitter's spread of light are restricted from the reflective surface
- Repeat the trip test (see Conduct a Trip Test on page 36) to verify these changes have eliminated the problem reflection(s). If the workpiece is especially reflective and comes close to the defined area, perform the trip test with the workpiece in place

Figure 6. Adjacent Reflective Surfaces

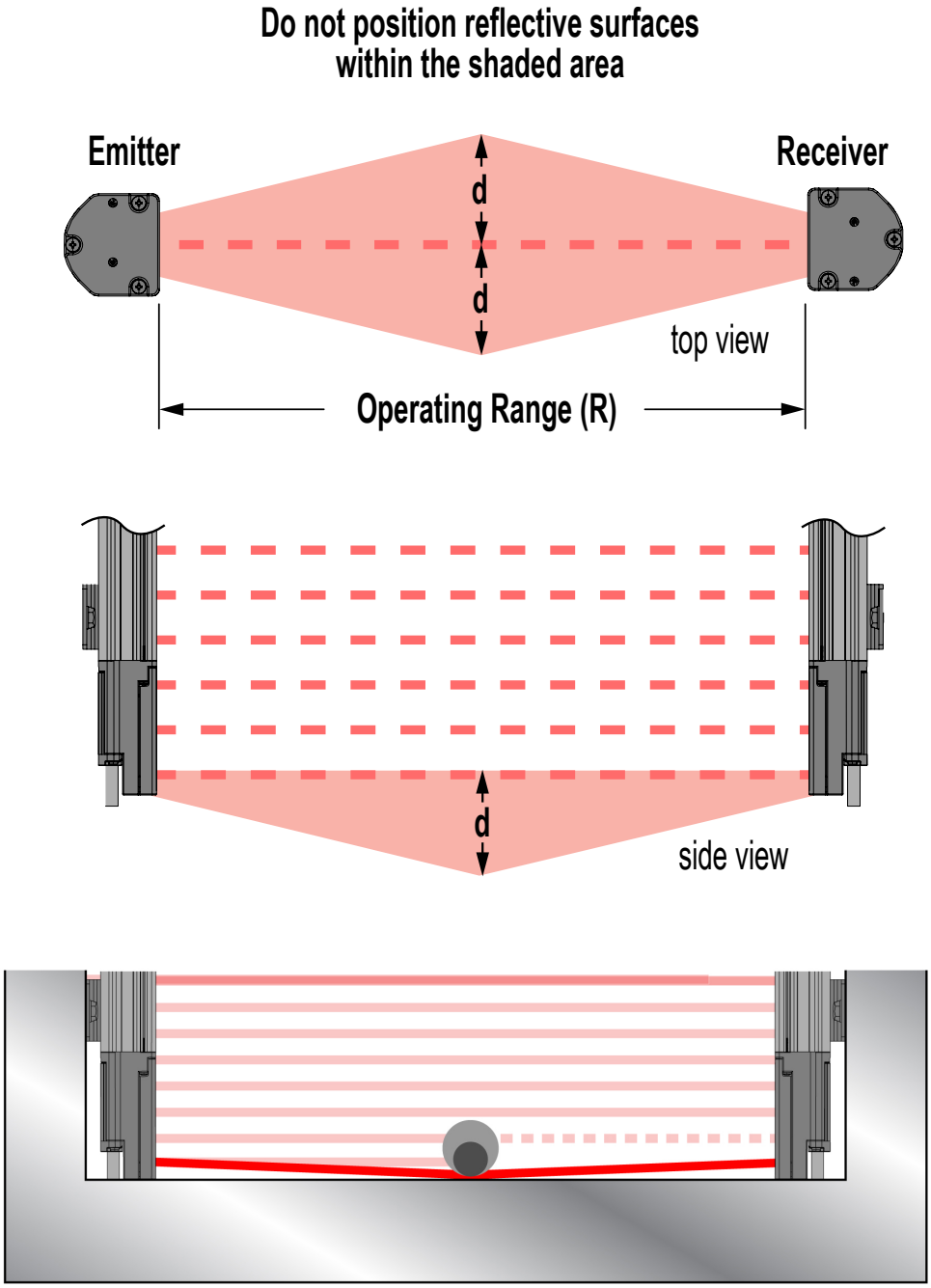

For 0.1 m to 3 m (4 in to 10 ft) Operating range: d = 0.13 m (5 in)
For Operating range > 3 m (> 10 ft): d = 0.0437 × R (m or ft)

At the midpoint of the defined area, a test piece (represented by the darker circle) with the specified system resolution does not cause a blocked condition due to an optical short circuit. Green Zone indicator lights are On and the OSSDs are On. Increasing the size of the test piece to block additional beams causes a blocked condition. The size of the test piece required to do this determines the actual resolution. Use the table below to calculate Dpf or Factor C when a shiny surface causes an optical short circuit.

Test Piece Model	Resolution	Depth Penetration Factor for U.S. Applications	Factor C for European Applications
STP-13	14 mm	24 mm (1 in)	0 mm
STP-2	19 mm	41 mm (1.6 in)	40 mm (1.6 in)
STP-16	25 mm	61 mm (2.5 in)	88 mm (3.5 in)
STP-14	30 mm	78 mm (3 in)	128 mm (5 in)
STP-4	32 mm	85 mm (3.3 in)	144 mm (5.7 in)
STP-17	34 mm	92 mm (3.6 in)	160 mm (6.3 in)
STP-1	38 mm	106 mm (4.2 in)	192 mm (7.6 in)
STP-3	45 mm	129 mm (5 in)	850 mm (33.5 in)
STP-8	51 mm	150 mm (5.9 in)	850 mm (33.5 in)
STP-5	58 mm	173 mm (6.8 in)	850 mm (33.5 in)
STP-15	60 mm	180 mm (7 in)	850 mm (33.5 in)
STP-12	62 mm	187 mm (7.4 in)	850 mm (33.5 in)

4.5.2 Use of Corner Mirrors

EZ-SCREEN LP Basic may be used with one or more corner mirrors. Mirrors are not allowed for applications that would allow undetected personnel access into the safeguarded area. The use of glass-surface corner mirrors reduces the maximum specified emitter/receiver separation by approximately 8 percent per mirror, as follows:

Table 2: SSM and MSM Series Glass-Surface Mirrors [1] —Maximum Emitter and Receiver Separation

Number of Corner Mirrors	Max. Emitter / Receiver Separation	Sensor Models
1	3.7 m (12.1 ft)	14 mm or 25 mm Resolution Models with 4 m (13 ft) Range
2	3.4 m (11.2 ft)	
3	3.1 m (10.3 ft)	
4	2.8 m (9.2 ft)	

If mirrors are used, the difference between the angle of incidence from the emitter to the mirror and from the mirror to the receiver must be between 45° and 120°. If placed at a sharper angle, an object in the light screen may deflect beam(s) to the receiver, preventing the object from being detected, also know as false proxing. Angles greater than 120° result in difficult alignment and possible optical short circuits.

WARNING:

- **Retroreflective Mode Installation**
- Failure to follow these instructions may create unreliable sensing and may result in serious injury or death.
- Do not install emitters and receivers in retroreflective mode with less than a 45° angle of incidence. Install emitters and receivers at an appropriate angle.

[1] *See the specific mirror data sheet or www.bannerengineering.com for more information.*

Figure 7. Using EZ-SCREEN LP Basic sensors in a retroreflective mode

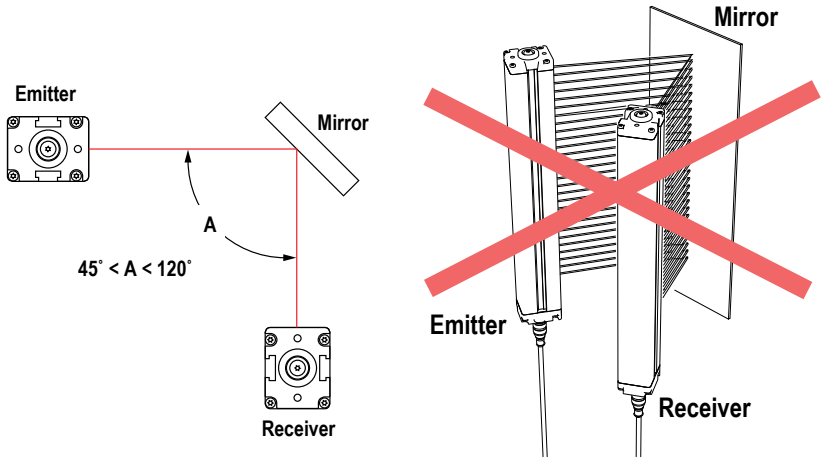

4.5.3 Emitter and Receiver Orientation

The emitter and receiver must be mounted parallel to each other and aligned in a common plane, with both machine interface cable ends pointing in the same direction.

Never mount the emitter with its machine interface cable end oriented in the opposite direction of the cable end of the receiver. If this occurs, voids in the light screen may allow objects or personnel to pass through the defined area undetected.

The emitter and receiver may be oriented in a vertical or horizontal plane, or at any angle between horizontal and vertical, as long as they are parallel to each other and their cable ends point in the same direction. Verify that the light screen completely covers all access to the hazard point that is not already protected by hard (fixed) guarding or other supplemental guarding.

WARNING:

- **Properly install system components**
- Incorrectly orienting the system components impairs the performance of the system and results in incomplete guarding, which can result in serious injury or death.
- Install the system components with their corresponding cable ends pointing in the same direction.

Figure 8. Examples of Correct Emitter/Receiver Orientation

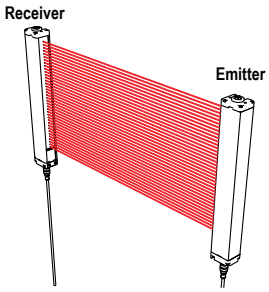

Both cable ends down

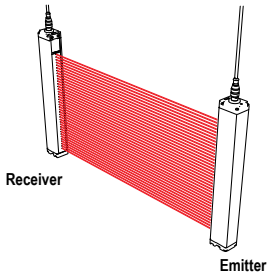

Both cable ends up

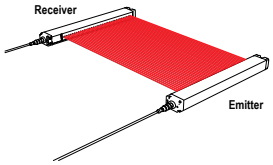

Orientation parallel to floor with both cable ends pointing in the same direction

Figure 9. Examples of Incorrect Emitter/Receiver Orientation

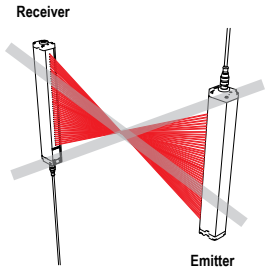

Cable ends point in opposite directions

Problem: Voids in defined area

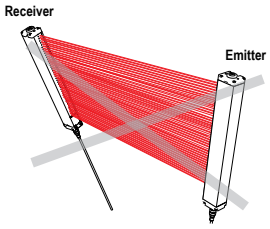

Emitter and receiver not parallel to each other

Problem: Reduced excess gain

4.5.4 Installation of Multiple Systems

When two or more EZ-SCREEN LP Basic emitter and receiver pairs are adjacent to one another, optical crosstalk may take place between the systems. To minimize optical crosstalk, alternate the positions of the emitters and receivers.

When three or more systems are installed in the same plane, optical crosstalk may occur between sensor pairs whose emitter and receiver lenses are oriented in the same direction. In this situation, eliminate optical crosstalk by mounting these sensor pairs exactly in line with each other within one plane, or by adding a mechanical barrier between the pairs.

Figure 10. Two systems in a horizontal plane

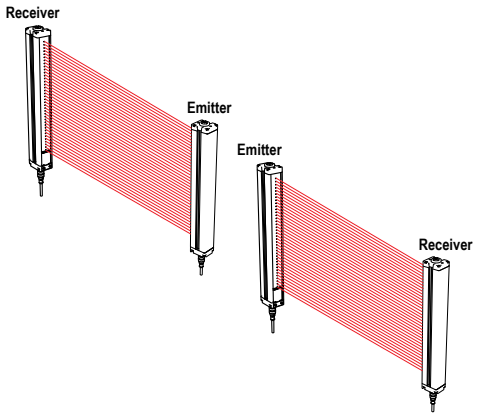

Figure 11. Two or three systems stacked (or alternate receiver/emitter positions)

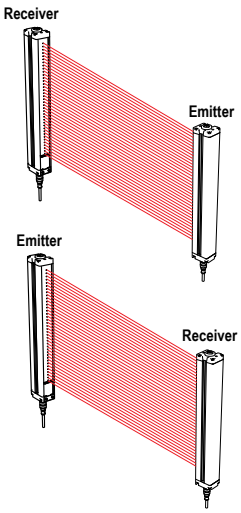

Figure 12. Two systems at right angles

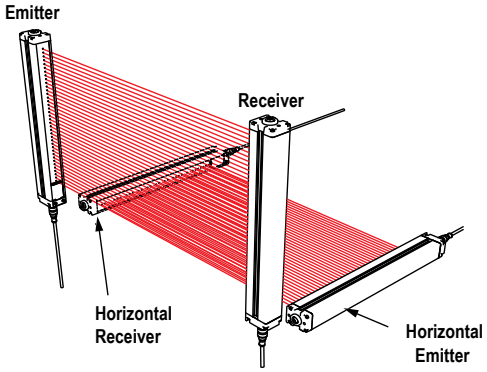

Figure 13. Multiple systems

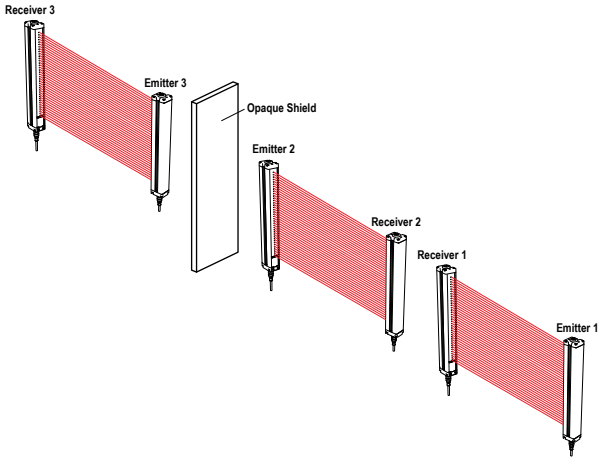

WARNING:

- **Properly connect multiple pairs of sensors**
- Connecting multiple output signal switching devices (OSSD) safety outputs to one interface module or otherwise parallel OSSD outputs can result in serious bodily injury or death, and is prohibited.
- Do not connect multiple pairs of sensors to a single device.

4.6 Mounting System Components

4.6.1 Mounting Hardware

Emitter/receiver pairs can be spaced from 0.1 m (4 in) to 4 m (13 ft) apart. This distance is reduced if corner mirrors are used.

All mounting brackets are ordered separately. End-cap brackets (**LPA-MBK-10**) allow ±20° rotation, depending on the bracket. Side-mount brackets (**LPA-MBK-12**) allow 30° rotation in one direction, and 10° in the other. Side-mount brackets may be mounted on either or both sides of the housing. If additional rotation is required, see the available accessory brackets.

Mounting the Optional LPA-MBK-10 End-Mount Brackets

Figure 14. End-Mount Brackets

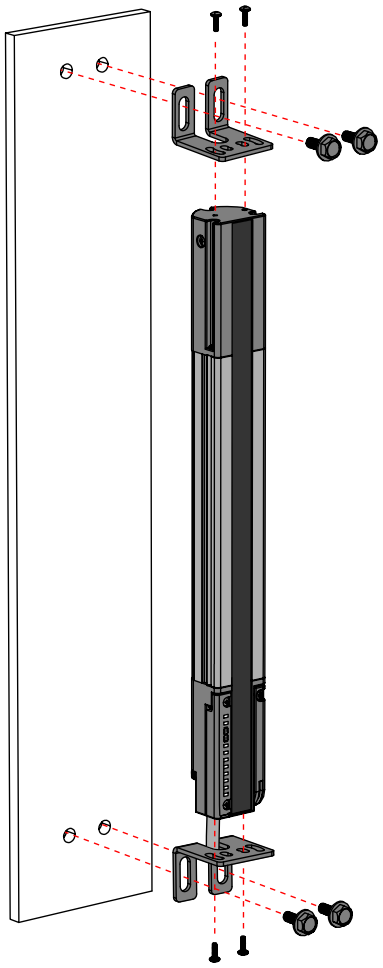

Figure 15. ±20° Rotation

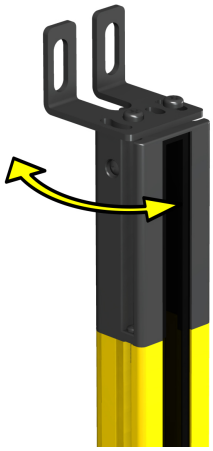

- Two brackets are supplied with the accessory kit.
- Brackets are designed to mount directly to MSA Series stands using the hardware supplied with the stands.

Important: The connector ends of both sensors must point in the same direction (see Emitter and Receiver Orientation on page 20). Loosely mount the brackets to the desired surface using the supplied M5 bolts and nuts, or user-supplied hardware. Brackets may face in or out, as desired.

1. From a common point of reference (ensuring the calculated minimum safety distance), measure to position the emitter and receiver in the same plane, with their midpoints directly opposite each other.
2. Attach the end-cap bracket plate to each end of the sensor, using the supplied M3 × 6 screws.
3. Position the emitter and receiver in their brackets, as shown in Emitter and Receiver Orientation on page 20. Loosely attach the front bracket plate to the bracket, at each end.
4. Verify that the sensor windows directly face each other. Measure from a reference plane, for example, a level building floor, to the same point(s) on the emitter and receiver to verify their mechanical alignment. Use a carpenter's level, a plumb bob, or the optional LAT-1 Laser Alignment Tool (see Alignment Aids on page 55) or check the diagonal distances between the sensors, to achieve mechanical alignment. Final alignment procedures are explained in Initial Checkout Procedure on page 33.
5. Tighten all fasteners.

Mounting the Optional LPA-MBK-11 End-Mount Brackets

Figure 16. Optional End-Mount Brackets

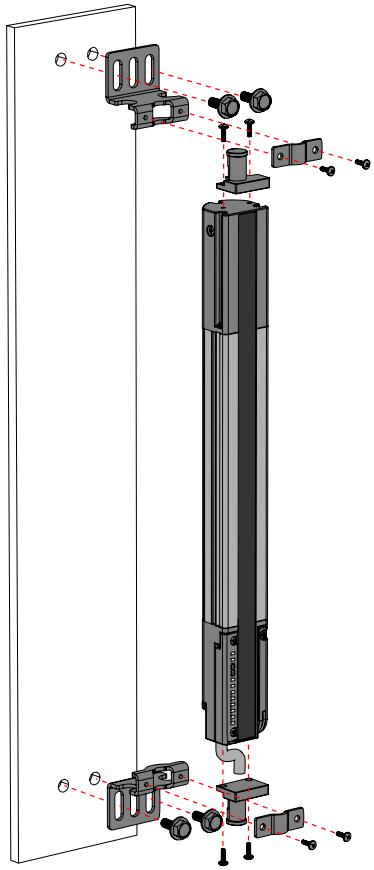

Figure 17. 360° Rotation

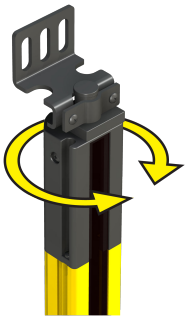

- Two brackets are supplied with the accessory kit.
- Brackets are designed to mount directly to MSA Series stands using the hardware supplied with the stands.

Important: The connector ends of both sensors must point in the same direction (see Figure 8 on page 20). Loosely mount the brackets to the desired surface using the supplied M5 bolts and nuts, or user-supplied hardware. Brackets may face in or out, as desired.

1. From a common point of reference (ensuring the calculated minimum safety distance), measure to position the emitter and receiver in the same plane, with their midpoints directly opposite each other.
2. Attach the end-cap bracket plate to each end of the sensor, using the supplied M3x6 screws.
3. Position the emitter and receiver in their brackets, as shown in Figure 8 on page 20. Loosely attach the front bracket plate to the bracket, at each end.
4. Verify that the sensor windows directly face each other. Measure from a reference plane, for example, a level building floor, to the same point(s) on the emitter and receiver to verify their mechanical alignment. Use a carpenter's level, a plumb bob, or the optional LAT-1 Laser Alignment Tool (see Alignment Aids on page 55) or check the diagonal distances between the sensors, to achieve mechanical alignment. Final alignment procedures are explained in Initial Checkout Procedure on page 33.
5. Tighten all fasteners.

Mounting the Optional LPA-MBK-12 Side-Mount Brackets

Figure 18. Side-Mount Brackets

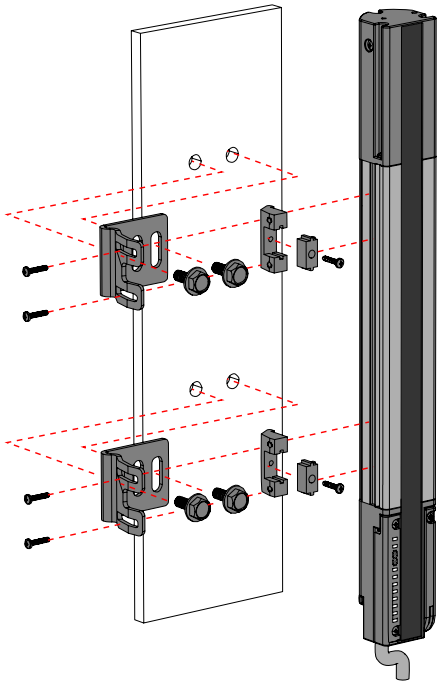

Figure 19. 360° Rotation

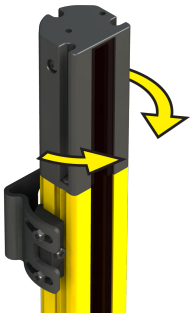

1. From a common point of reference (ensuring the calculated minimum safety distance), measure to locate the emitter and receiver in the same plane, with their midpoints directly opposite each other.

Important: The connector ends of both sensors must point in the same direction (see Figure 8 on page 20).

2. Mount the emitter and receiver mounting brackets to the desired surface, using the supplied M5 bolts and nuts or user-supplied hardware.
3. Attach the 2-piece clamp to the sensor housing side channels (either side of the housing) at the appropriate locations, using the supplied M3x6 screws.
4. Attach the clamp to the bracket, using the supplied M5 screws.
5. Position the emitter and receiver windows directly facing each other. Measure from a reference plane, for example, a level building floor, to the same point(s) on the emitter and receiver to verify their mechanical alignment. Use a carpenter's level, a plumb bob, or the optional LAT-1 Laser Alignment Tool (see Alignment Aids on page 55) or check the diagonal distances between the sensors, to achieve mechanical alignment. Final alignment procedures are explained in Initial Checkout Procedure on page 33.
6. Tighten all fasteners.

Bracket Assembly Instructions

Final assembly (tightening) of the mounting bracket should be accomplished with a #1 Phillips screwdriver or 3/16 in. / 5 mm “thin-walled” nut driver to achieve the listed torque specifications. Sensors may be mounted with side-mount brackets, end-mount brackets, or a combination of both.

Figure 20. LPA-MBK-11 End-mount hardware attachment

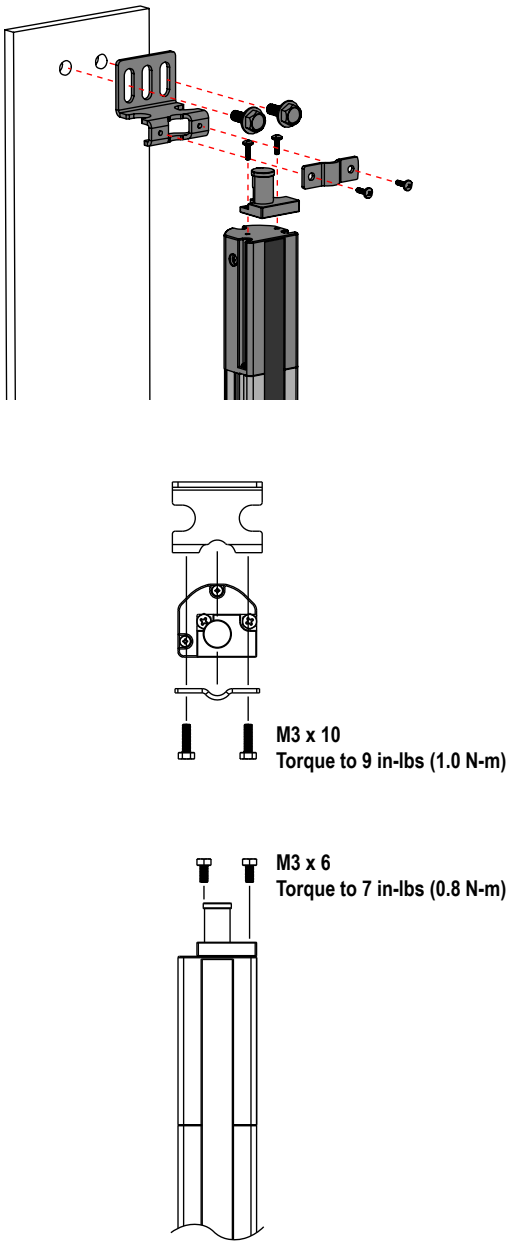

Figure 21. LPA-MBK-12 Side-mount hardware attachment

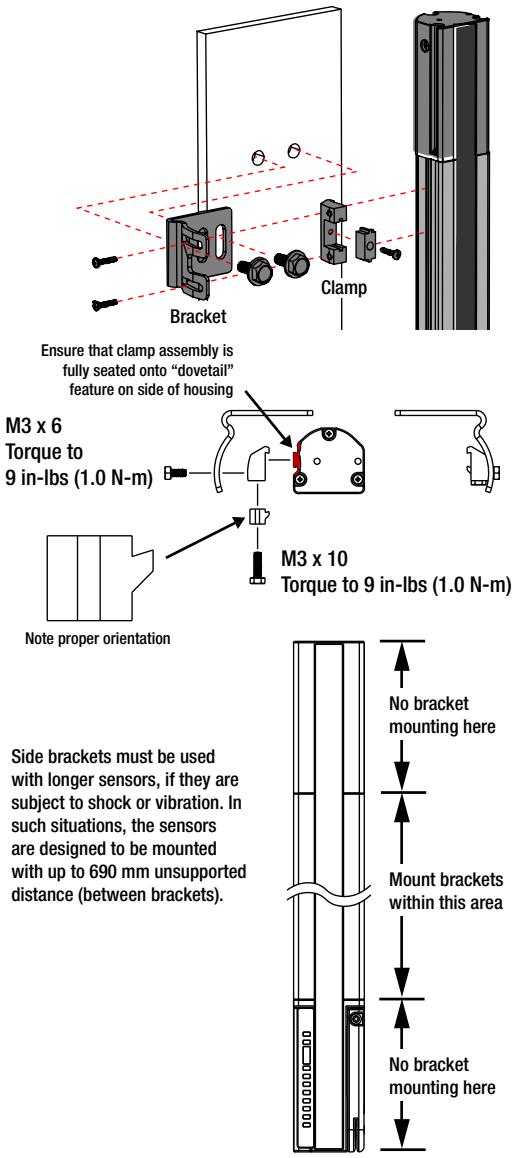

Installing and Mounting the Optional LPA-MBK-16 Side-Mount Bracket

Use a 3 mm hex driver to tighten the mounting bracket and achieve the listed torque specifications.

Figure 22. Installing the optional side-mount bracket

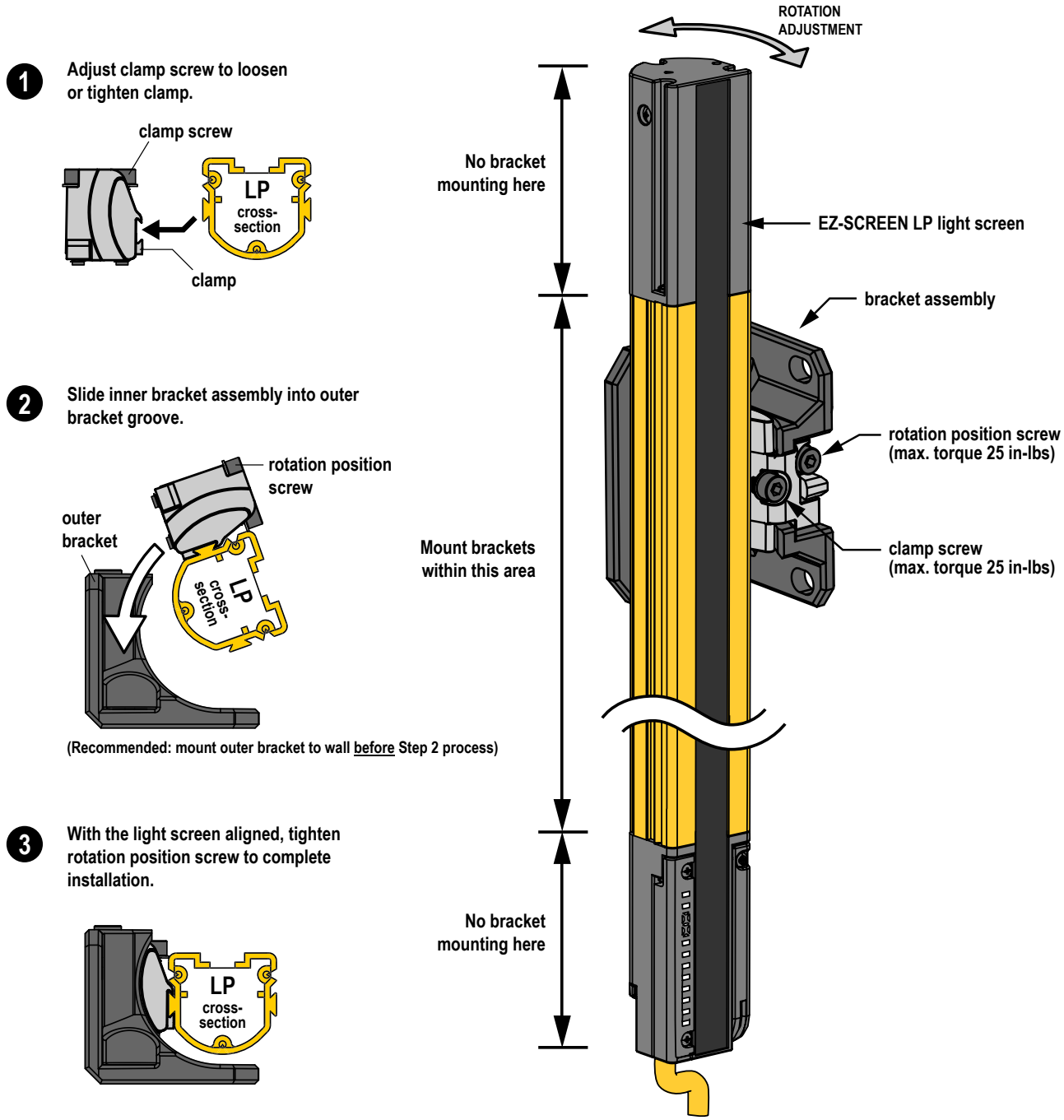

To mount the EZ-SCREEN LP Basic:

1. Position the emitter and receiver windows directly facing each other.
2. Measure from a reference plane, for example, a level building floor, to the same point(s) on the emitter and receiver to verify their mechanical alignment. Use a carpenter's level, a plumb bob, or the optional LAT-1 Laser Alignment Tool (see Alignment Aids on page 55) or check the diagonal distances between the sensors, to achieve mechanical alignment. Final alignment procedures are explained in Initial Checkout Procedure on page 33.
3. Tighten all fasteners.

4.6.2 Sensor Mounting and Mechanical Alignment

Verify that:

- The emitter and receiver are directly opposite each other
- Nothing is interrupting the defined area
- The defined area is the same distance from a common reference plane for each sensor
- The emitter and receiver are in the same plane and are level/plumb and square to each other (vertical, horizontal, or inclined at the same angle, and not tilted front-to-back or side-to-side)

Figure 23. Incorrect Sensor Alignment

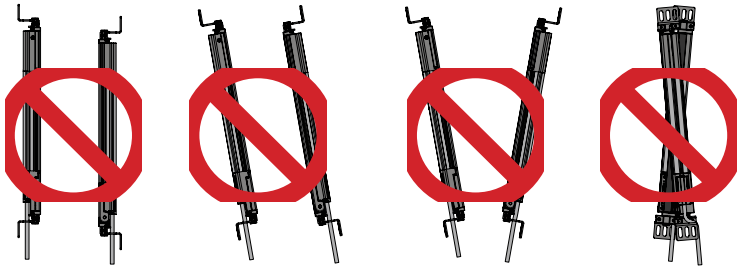

Angled or Horizontal Installations – verify that:

- Distance X at the emitter and receiver are equal
- Distance Y at the emitter and receiver are equal
- Distance Z at the emitter and receiver are equal from parallel surfaces
- Vertical face (the window) is level/plumb
- Defined area is square. Check diagonal measurements if possible. See Vertical Installations.

Figure 24. For angled or horizontal installations

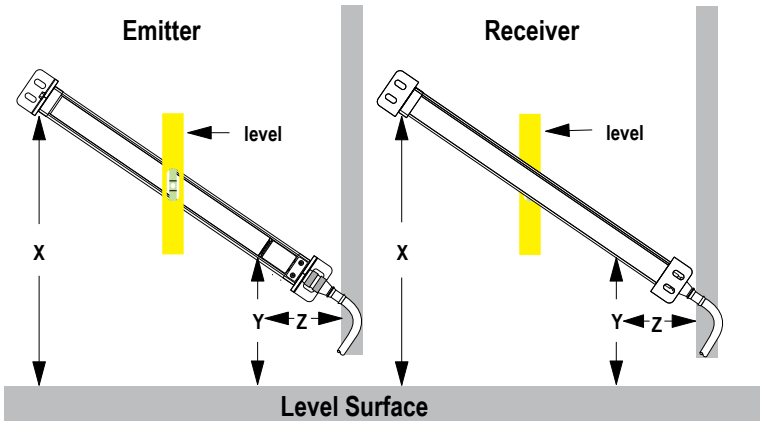

Vertical Installations – verify that:

- Distance X at the emitter and receiver are equal
- Both sensors are level/plumb (check both the side and face)
- Defined area is square. Check diagonal measurements if possible (Diagonal A = Diagonal B).

Figure 25. For vertical installations

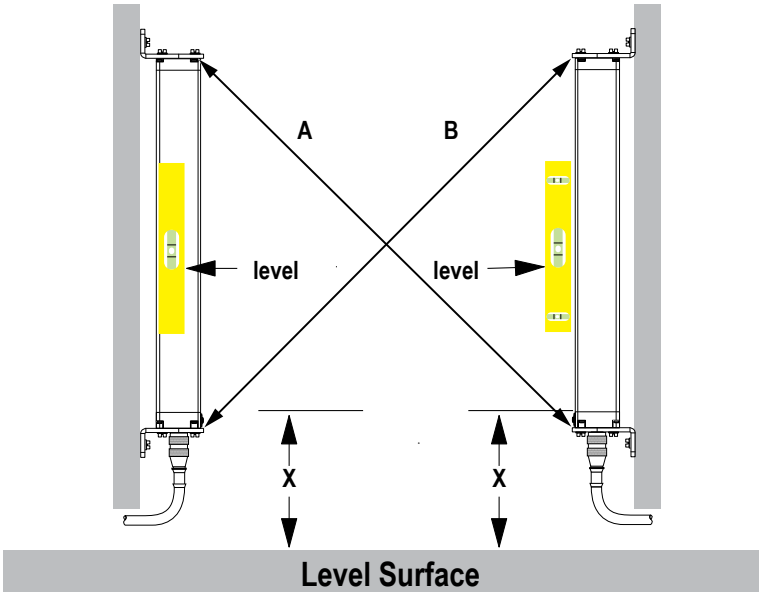

4.6.3 Dimensions and Defined Area

All measurements are listed in millimeters [inches], unless noted otherwise.

Figure 26. Emitter and receiver mounting dimensions and defined area

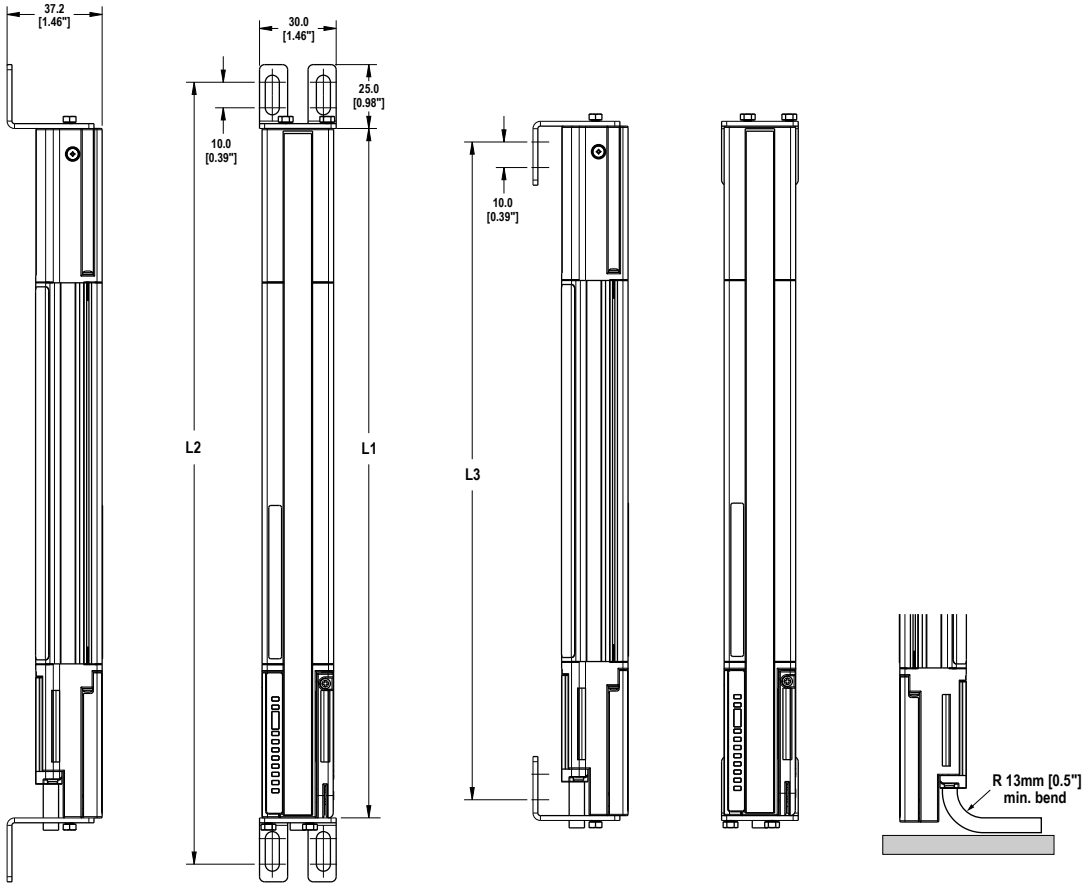

Emitter / Receiver Model	Housing Length	Distance Between Bracket Holes		Defined Area [2]
	L1	L2	L3	
SLPVA..-270	270 mm (10.6 in)	326 mm (12.8 in)	258 mm (10.2 in)	270 mm
SLPVA..-410	410 mm (16.1 in)	465 mm (18.3 in)	398 mm (15.7 in)	410 mm
SLPVA..-550	549 mm (21.6 in)	605 mm (23.8 in)	537 mm (21.1 in)	550 mm
SLPVA..-690	689 mm (27.1 in)	745 mm (29.3 in)	677 mm (26.7 in)	690 mm

Table 3: Included mounting bracket—dimensions (for emitter or receiver)

Optional End-Cap Bracket LPA-MBK-10



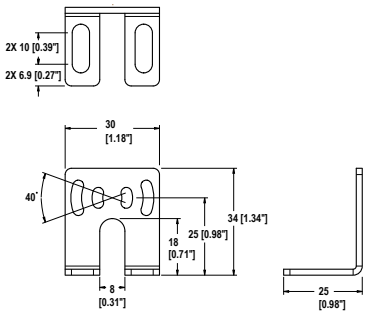

Optional End-Cap Bracket LPA-MBK-11



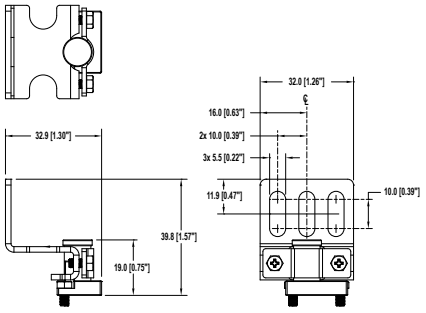

Optional Side-Mount Bracket LPA-MBK-12

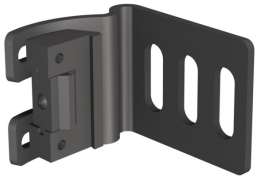

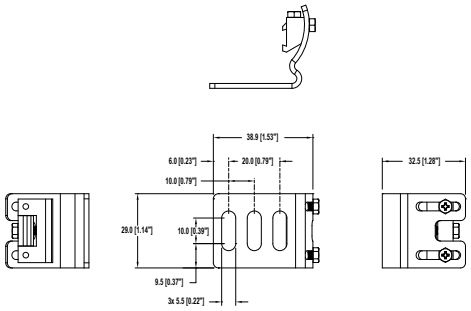

[2] Nominal measurement

Table 4: Optional mounting bracket—dimensions (for emitter or receiver)

Optional Side-Mount Bracket
LPA-MBK-16



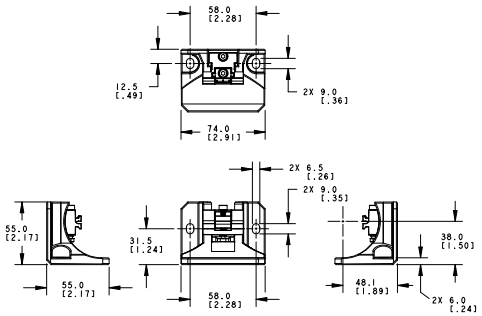

5 Electrical Installation and Testing

The following are the main steps to electrically install the EZ-SCREEN LP Basic components and interface with the guarded machine.

WARNING:

- **Read this Section Carefully Before Installing the System**
- **Failure to follow these instructions could result in serious injury or death.**
- If all mounting, installation, interfacing, and checkout procedures are not followed properly, this Banner Engineering Corp. device cannot provide the protection for which it was designed.
- The user is responsible for ensuring that all local, state, and national laws, rules, codes, or regulations relating to the installation and use of this control system in any particular application are satisfied. Ensure that all legal requirements have been met and that all technical installation and maintenance instructions contained in this manual are followed.
- The user has the sole responsibility to ensure that this Banner Engineering Corp. device is installed and interfaced to the guarded machine by Qualified Persons, in accordance with this manual and applicable safety regulations. A Qualified person is a person who, by possession of a recognized degree or certificate of professional training, or who, by extensive knowledge, training and experience, has successfully demonstrated the ability to solve problems relating to the subject matter and work.

1. Routing cordsets and making initial electrical connections (see Routing Cordsets on page 32 and Initial Electrical Connections on page 33).
2. Apply power to each emitter/receiver pair (see Initial Electrical Connections on page 33).
3. Perform an Initial Checkout Procedure (see Initial Checkout Procedure on page 33).
4. Make all electrical interface connections to the guarded machine (see Electrical Connections to the Guarded Machine on page 37).
5. Perform a commissioning checkout procedure (see Commissioning Checkout on page 40).

5.1 Routing Cordsets

Attach the required cordsets to the sensors, and route the sensor cordsets to the junction box, electrical panel, or other enclosure in which the interface module, the redundant mechanically linked interposing relays, FSDs, or other safety-related parts of the control system are located. This must be done per local wiring code for low-voltage dc control cables and may require installation of electrical conduit. See Accessories on page 47 for selection of Banner supplied cables.

Note: The machine interface cable must connect to the sensor end adjacent to the indicators, in order for the System to operate properly.

EZ-SCREEN LP Basic is designed and manufactured to be highly resistant to electrical noise and to operate reliably in industrial settings. However, extreme electrical noise may cause a random Trip condition; in extreme cases, a Lockout is possible.

Emitter and receiver wiring is low voltage; routing the sensor wires alongside power wires, motor/servo wires, or other high voltage wiring may inject noise into the EZ-SCREEN LP Basic System. It is good wiring practice, and sometimes may be required by code, to isolate emitter and receiver cables from high-voltage wires, avoid routing cables close to “noisy” wiring, and provide a good connection to earth ground.

Sensor cabling and any interconnect wiring should have an insulation temperature rating of at least 90 °C (194 °F).

Installing RD Cordsets:

1. Slide the RD connector firmly into the housing's RD port.
2. Tighten the Phillips screws at the base of the connector to lock into place.

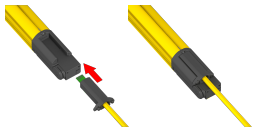

Table 5: Maximum machine interface cable length versus total load current (OSSDs)

Maximum Machine Interface Cordset Length [3]				
Total Load Current (OSSD 1 + OSSD 2)				
0.1 A	0.25 A	0.5 A	0.75 A	1.0 A
78.9 m (259 ft)	62.5 m (205 ft)	46.6 m (153 ft)	37.2 m (122 ft)	30.8 m (101 ft)

Note: Emitter and receiver power (current) requirements are accounted for. The above values represent additional current draw that must be accounted for.

Note: Maximum cordset lengths are intended to ensure that adequate power is available to the EZ-SCREEN LP Basic when the supply is operating at +20 V dc. Values in the previous table are worse case. Contact banner Engineering if there are any questions.

5.2 Initial Electrical Connections

WARNING:
- **Risk of electric shock**
- Use extreme caution to avoid electrical shock. Serious injury or death could result.
- Always disconnect power from the safety system (for example, device, module, interfacing, etc.), guarded machine, and/or the machine being controlled before making any connections or replacing any component. Lockout/tagout procedures might be required. Refer to OSHA 29CFR1910.147, ANSI Z244-1, or the applicable standard for controlling hazardous energy.
- Make no more connections to the device or system than are described in this manual. Electrical installation and wiring must be made by a Qualified Person [4] and must comply with the applicable electrical standards and wiring codes, such as the NEC (National Electrical Code), NFPA 79, or IEC 60204-1, and all applicable local standards and codes.

Following relevant electrical standards and wiring codes, such as the NEC, NFPA79 or IEC60204-1, always connect the earth ground (green/yellow wire). **Do not operate the EZ-SCREEN LP Basic without an earth ground connection.**

Make the electrical connections in the order described in this section. Do not remove end-caps; no internal connections are to be made. All connections are made through the RD or pigtail QD connections.

Emitter Cordset

EZ-SCREEN LP Basic emitters have an 8-pin cordset, but not all conductors are used. The other wires are in place to allow a parallel connection (color-for-color) to the receiver cable, providing sensor interchangeability (or “swapability”); either sensor may be installed at either cordset connection. In addition to providing similar cabling, this wiring scheme is advantageous during installation, wiring, and troubleshooting.

Receiver Cordset

Do not connect any wires to the machine control circuits (OSSD outputs) at this time.

5.3 Initial Checkout Procedure

The initial checkout procedure must be performed by a Qualified Person. It must be performed only after configuring the System and after connecting the components.

Perform this procedure to:
- Ensure proper installation when the System is first installed
- Ensure proper System function whenever any maintenance or modification is performed on the System or on the machinery that is guarded by the System.

5.3.1 Configuring the System for Initial Checkout

For the initial checkout, the EZ-SCREEN LP Basic System must be checked without power available to the guarded machine. Final interface connections to the guarded machine cannot take place until the light screen system has been checked out. This may require lockout/tagout procedures (refer to OSHA1910.147, ANSI Z244-1, ISO 14118, or the

[3] RDLP-8..D or QDE-8..D model cordsets; may require multiple cables.
[4] A person who, by possession of a recognized degree or certificate of professional training, or who, by extensive knowledge, training and experience, has successfully demonstrated the ability to solve problems relating to the subject matter and work.

appropriate standard for controlling hazardous energy). The OSSD connections will be made after the initial checkout procedure has been successfully completed.

Verify that:

- Power has been removed from (or is not available to) the guarded machine and its controls or actuators
- The machine control circuit or the Safety/Interface Module is not connected to the OSSD outputs at this time (permanent connections will be made later)

5.3.2 Initial Power-Up

1. Inspect the area near the light screen for reflective surfaces, including work pieces and the guarded machine. Reflective surfaces may cause light beams to reflect around a person in the light screen, preventing the person from being detected and not stopping the machine motion (see Adjacent Reflective Surfaces on page 17).
2. Eliminate the reflective surfaces as much possible by relocating, painting, masking, or roughening them. Remaining problem reflections will become apparent during the trip test.
3. Verify that power is removed from the EZ-SCREEN LP Basic System and from the guarded machine and that the OSSD safety outputs are not connected.
4. Remove all obstructions from the light screen.
5. Leaving power to the guarded machine off, make power and earth ground connections on both the emitter and receiver cables (see Reference Wiring Diagrams on page 41).
6. Power up the EZ-SCREEN LP Basic System only.
7. Verify that the input power is present to both the emitter and the receiver. At least one indicator on both the emitter and the receiver should be On and the start-up sequence should cycle.
8. Watch both the emitter and the receiver Status indicators, 7-segment displays, and the receiver Zone indicators to determine the light screen alignment status.
    - **Lockout Condition**—the emitter Status indicator is single-flashing Red; the receiver Status indicator is On Red, and the 7-segment display reads **CH1**. For diagnostic information, see Troubleshooting on page 56.
    - **Receiver Lockout Condition** —the receiver Status indicator is single-flashing Red, with Zone and Reset indicators Off. For diagnostic information, see Troubleshooting on page 56.
    - **Normal Operating Mode** (emitter)—The Status indicator is On Green.
    - **Clear (Run) Condition** (receiver)—The Status indicator is On Green and the Reset indicator is On Yellow. All Zone indicators are On Green.
    - **A Blocked Condition** (receiver)—The Status indicator is On Red, the yellow Reset indicator is On, one or more Zone indicator(s) are On Red, identifying the location of the blocked beams, and the number of blocked beams is displayed. Proceed to Optical Alignment on page 34.

Note: If beam 1 is blocked, Zone indicator 1 is Red and all others are Off. Beam 1 provides the synchronization signal.

For indicator and display information, see Operating Features on page 7.

5.3.3 Optical Alignment

WARNING:

- **Hazard exposure**
- Failure to follow these instructions could result in serious injury or death.
- Verify that no individuals are exposed to any hazard if the output signal switching device (OSSD) outputs turn on when the emitter and receiver become aligned.

Verify the sensor mounting.

Verify the optimal alignment, adjusting the sensor rotation with the power On:

1. Verify that the emitter and the receiver are pointed squarely at each other. Use a straight edge (for example, a level) to determine the direction the sensor is facing. The sensor face must be perpendicular to the optical axis.

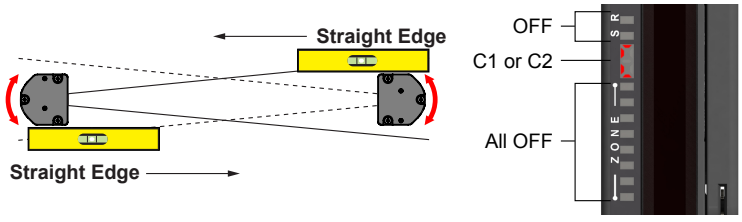

2. If the Channel #1 beam is not aligned, the Status and Zone 1 indicators are Red, the Reset indicator is yellow, and the 7-segment display sequentially indicates **CH1**. Zone indicators 2–8 are Off.

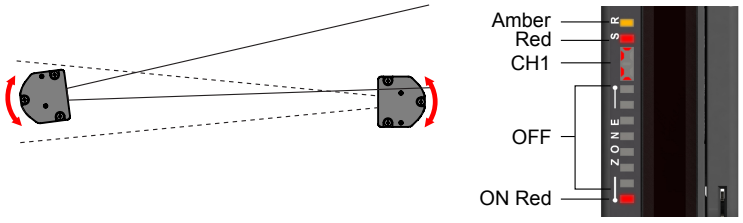

3. If the Green Status and Yellow Reset indicators are On, go to the next step. If not, rotate each sensor (one at a time) left and right until the Green Status indicator is On. (As the sensor rotates out of alignment, the Red Status indicator turns On). As more beams are aligned, the Zone indicators turn from Red to Green and the number of blocked beam indicators decreases.

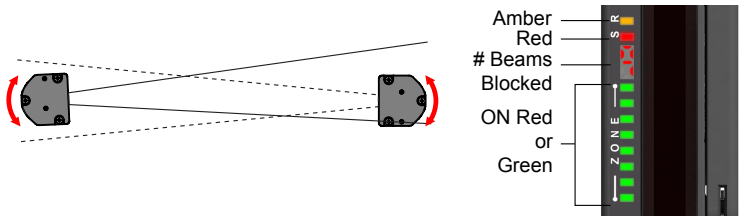

4. Optimize alignment and maximize excess gain.
   a. Slightly loosen the sensor mounting screws.
   b. Rotate one sensor left and right, noting the positions in each arc where the Status indicators turn Red (Blocked condition); repeat with the other sensor.
   c. Center each sensor between those two positions.
   d. Tighten the mounting screws, making sure to maintain the positioning as the screws are tightened.

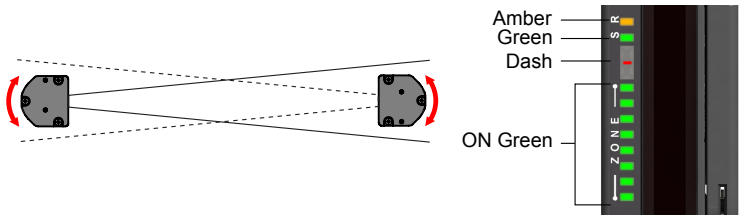

For situations where alignment is difficult, a LAT-1 Laser Alignment Tool can be used to assist or confirm alignment by providing a visible red dot along the sensor's optical axis. (See Alignment Aids on page 55)

Note: If at any time the Red Status indicator begins to flash steadily, the System has entered a Lockout condition. For more information, see Troubleshooting on page 56.

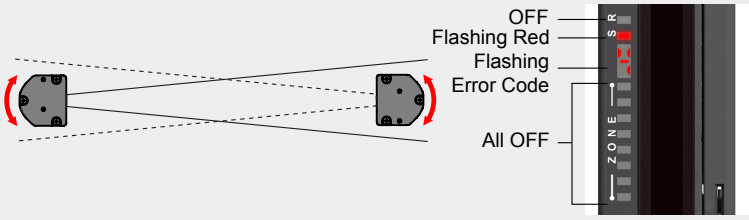

5.3.4 Optical Alignment Procedure with Mirrors

EZ-SCREEN LP Basic sensors may be used with one or more corner mirrors for guarding more than one side of an area. The MSM-... and SSM-... rear-surface glass mirrors are rated at 85% efficiency. Thus, excess gain and sensing range are reduced when using mirrors; see Use of Corner Mirrors on page 19.

During any adjustments, allow only one individual to adjust any one item at any one time. In addition to the standard optical alignment procedure, verify:

1. The emitter, receiver, and all mirrors are level and plumb.
2. The middle of the defined area and the center point of the mirrors are approximately the same distance from a common reference point, such as the same height above a level floor.
3. There are equal amounts of mirror surface above and below the defined area such that the optical beams are not passing below or above the mirror.

Note: An LAT-1 Laser Alignment Tool is very helpful by providing a visible red dot along the optical axis. See Alignment Aids on page 55, Figure 27 on page 36, and Banner Safety Applications Note SA104 (p/n 57477) for more information.

Figure 27. Optical alignment using the LAT-1

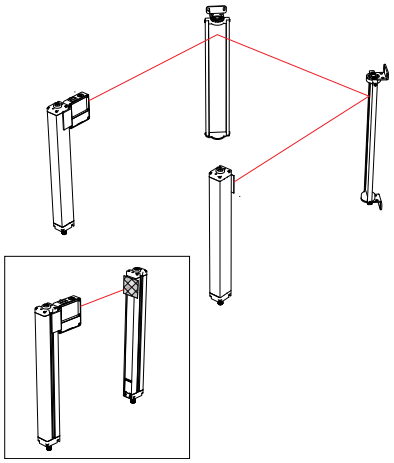

Figure 28. Corner Mirror Alignment

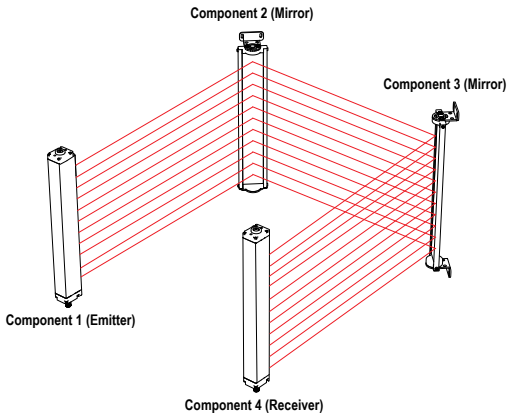

5.3.5 Conduct a Trip Test

After optimizing the optical alignment, perform the trip test to verify the detection capability of the EZ-SCREEN LP Basic System.

This test also verifies correct sensor orientation, identifies optical short circuits, and verifies the expected resolution for applications using reduced resolution. After the installation has passed the trip test, the safety outputs may be connected and the commissioning checkout may be performed (initial installations only).

1. Select the proper test piece, supplied with the receiver.

Models	Test Piece
14 mm Resolution	14 mm (0.55 in) dia. Model STP-13
25 mm Resolution	25 mm (0.98 in) dia. Model STP-16

2. Verify that the System is in Run mode, the Green Status indicator is On (or flashing if reduced resolution is enabled), all Zone indicators are green, and the amber Status indicator is On. A manual reset may be required in Latch mode.
3. Pass the specified test piece through the defined area in three paths: near the emitter, near the receiver, and midway between the emitter and receiver.

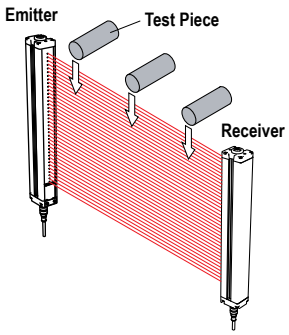

During each pass, while the test piece is interrupting the defined area, **at least one Zone indicator must be red. The red Zone indicator must change with the position of the test piece within the defined area.** For Trip Output Operation: The Status indicator must turn red and remain red for as long as the test piece remains in the defined area. If not, the installation has failed the trip test. If all Zone indicators turn green or fail to follow the position of the test piece while it is within the defined area, the installation has failed the trip test. Check for correct sensor orientation, reflective surfaces, and unguarded areas created due to the use of Blanking. Do not continue until the situation is corrected.

WARNING:
- **Trip test failure**
- Using a system that has failed a trip test can result in serious bodily injury or death. If the trip test has failed, the system might not stop dangerous machine motion when a person or object enters the sensing field.
- Do not attempt to use the system if the system does not respond properly to the trip test.

4. Remove the test piece from the defined area,
   - In trip output operation, the green Status indicator must turn on.
   - In latch output operation, the Status indicator will remain red until a manual reset is performed (the amber Reset indicator will be flashing).
5. If mirrors are used in the application, test the defined area on each leg of the sensing path (for example, emitter to mirror, between mirror and receiver).

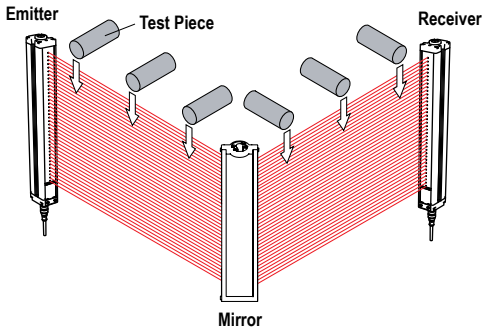

6. If the EZ-SCREEN LP Basic System passes all checks during the trip test, go on to Electrical Connections to the Guarded Machine on page 37.

5.4 Electrical Connections to the Guarded Machine

Verify that power has been removed from the EZ-SCREEN LP Basic and the guarded machine. Make the permanent electrical connections as required by each individual application.

Lockout/tagout procedures may be required (refer to OSHA 1910.147, ANSI Z244-1, ISO 14118, or the appropriate standard for controlling hazardous energy). Follow relevant electrical standards and wiring codes, such as the NEC, NFPA79 or IEC 60204-1.

Supply power should already be connected. The EZ-SCREEN LP Basic must also have been aligned and passed the Initial Checkout, as described in Initial Checkout Procedure on page 33.

The final connections to be made or verified are the OSSD outputs.

WARNING:
- **Risk of electric shock**
- Use extreme caution to avoid electrical shock. Serious injury or death could result.
- Always disconnect power from the safety system (for example, device, module, interfacing, etc.), guarded machine, and/or the machine being controlled before making any connections or replacing any component. Lockout/tagout procedures might be required. Refer to OSHA 29CFR1910.147, ANSI Z244-1, or the applicable standard for controlling hazardous energy.
- Make no more connections to the device or system than are described in this manual. Electrical installation and wiring must be made by a Qualified Person [5] and must comply with the applicable electrical standards and wiring codes, such as the NEC (National Electrical Code), NFPA 79, or IEC 60204-1, and all applicable local standards and codes.

5.4.1 Protective Stop (Safety Stop) Circuits

A protective stop (safety stop) allows for an orderly cessation of motion for safeguarding purposes, which results in a stop of motion and removal of power from the Machine Primary Control Elements (MPCE) (assuming this does not create additional hazards).

A protective stop circuit typically comprises a minimum of two normally open contacts from forced-guided, mechanically linked relays, which are monitored through External Device Monitoring (EDM) to detect certain failures, to prevent the loss of the safety function. Such a circuit can be described as a "safe switching point".

Typically, protective stop circuits are either single channel, which is a series connection of at least two normally open contacts; or dual-channel, which is a separate connection of two normally open contacts. In either method, the safety function relies on the use of redundant contacts to control a single hazard. If one contact fails On, the second contact arrests the hazards and prevents the next cycle from occurring.

The interfacing of the protective stop circuits must be accomplished so that the safety function cannot be suspended, overridden, or defeated, unless accomplished in a manner of the same or greater degree of safety as the machine's safety related control system that includes the EZ-SCREEN LP Basic.

A Banner XS26-2 Safety Controller with XS1ro or XS2ro Relay Expansion Module, Banner SC10-2roe Safety Controller, or Banner UM-FA-xA Universal Safety Module provides a series connection of redundant contacts that form protective stop circuits for use in either single-channel or dual-channel control.

5.4.2 Output Signal Switching Devices (OSSDs) and External Device Monitoring (EDM)

The EZ-SCREEN LP Basic is able to detect faults on OSSD1 and OSSD2. These faults include short circuits to +24 V dc and 0 V, and between OSSD1 and OSSD2.

Both Output Signal Switching Device (OSSD) outputs must be connected to the machine control so that the machine's safety-related control system interrupts the circuit or power to the Machine Primary Control Element(s) (MPCE), resulting in a non-hazardous condition.

Final Switching Devices (FSDs) typically accomplish this when the OSSDs go to an OFF state.

Refer to the output specifications in the Receiver Specifications and these warnings before making OSSD output connections and interfacing the EZ-SCREEN LP Basic to the machine.

WARNING:
- **Interfacing both output signal switching devices (OSSD)**
- Failure to follow these instructions could result in serious injury or death.
- Unless the same degree of safety is maintained, never wire an intermediate device(s) (PLC, PES, PC) between the safety module outputs and the master stop control element it switches such that a failure causes a loss of the safety stop command or the failure allows the safety function to be suspended, overridden, or defeated.
- Connect both OSSD outputs to the machine control so that the machine’s safety-related control system interrupts the circuit to the machine primary control element(s), resulting in a non-hazardous condition.

[5] A person who, by possession of a recognized degree or certificate of professional training, or who, by extensive knowledge, training and experience, has successfully demonstrated the ability to solve problems relating to the subject matter and work.

WARNING:
- **OSSD Interfacing**
- Failure to properly interface the OSSD Outputs to the guarded machine could result in serious injury or death.
- To ensure proper operation, the Banner device output parameters and machine input parameters must be considered when interfacing the Banner device OSSD outputs to machine inputs. Design machine control circuitry so that all of the following are true:

  The maximum load resistance value is not exceeded.
  The maximum specified OSSD OFF-state voltage does not result in an ON condition.

External device monitoring (EDM) is a function used to monitor the state of the external, positively guided (mechanically linked) machine control contacts (FSDs and/or MPCEs). The EZ-SCREEN LP Basic System does not include the EDM function. As a result, the EZ-SCREEN LP Basic System should be used with an external safety monitoring device that monitors the status of the two EZ-SCREEN LP Basic OSSDs and is capable of providing the EDM function. Examples of appropriate external safety monitoring devices include Banner SC26-2 and XS26-2 Safety Controllers, SC10-2roe Safety Controller, Banner UM-FA-9A and UM-FA-11A Universal Input Safety Modules, and Safety PLCs.

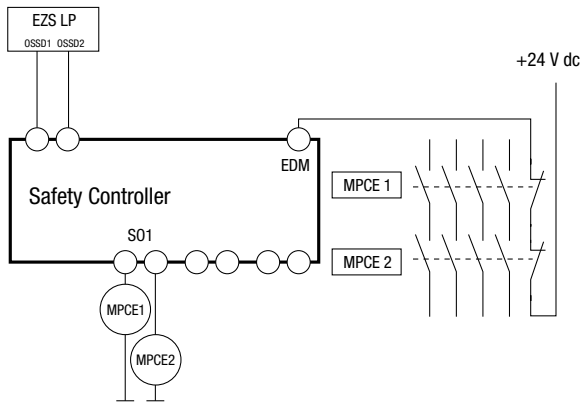

Single-channel EDM used to monitor both MPCE feedback signals. If one or both channels do not close, the system enters a lockout mode.

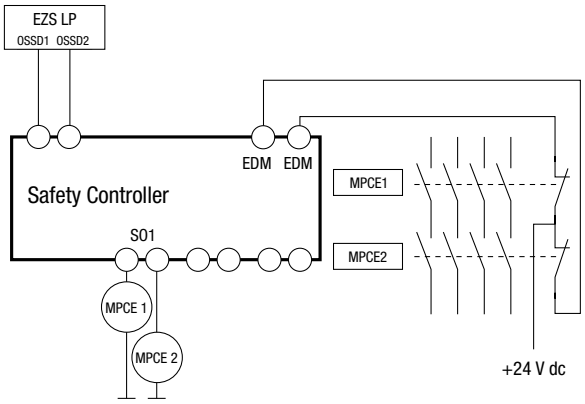

Dual-channel EDM used to monitor both MPCE feedback signals. If the channels are not in the same state, the system enters a Lockout mode.

WARNING:
- The EZ-SCREEN LP Basic does not have external device monitoring (EDM).
- If EDM is required for the application, it must be implemented in the external control.

5.4.3 Preparing for System Operation

After the initial trip test has been accomplished, and the OSSD safety outputs and EDM connections have been made to the machine to be controlled, the EZ-SCREEN LP Basic is ready for testing in combination with the guarded machine.

The operation of the EZ-SCREEN LP Basic with the guarded machine must be verified before the combined System and machine may be put into service. To do this, a Qualified Person must perform the Commissioning Checkout Procedure (see Commissioning Checkout on page 40).

5.4.4 Sensor Interchangeability

The figures illustrate a wiring option that provides sensor interchangeability (or swapability)—the ability to install either sensor at either QD connection.

The resulting installation provides the ability to swap the emitter and receiver position, similar to a popular feature of Banner safety light screens. This wiring option provides advantages during installation, wiring, and troubleshooting.

To use this option, connect all emitter wires in parallel (color-for-color) to the receiver cable via individual wires or the CSB.. splitter cordset .

Model CSB.. splitter cordsets and DEE2R.. double-ended cordsets allow easy interconnection between an EZ-SCREEN LP Basic receiver and emitter, providing a single homerun cordset.

Figure 29. Individual Cordsets

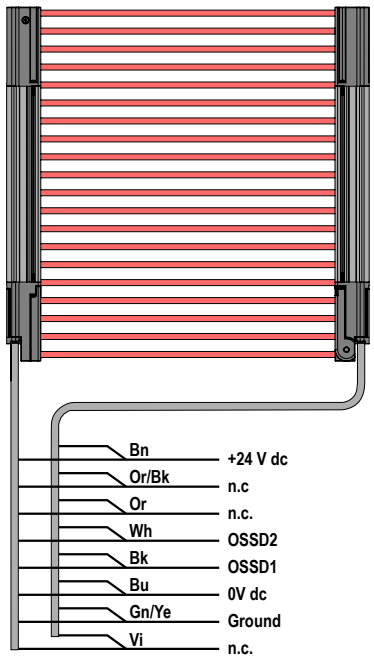

Figure 30. Splitter Cordsets

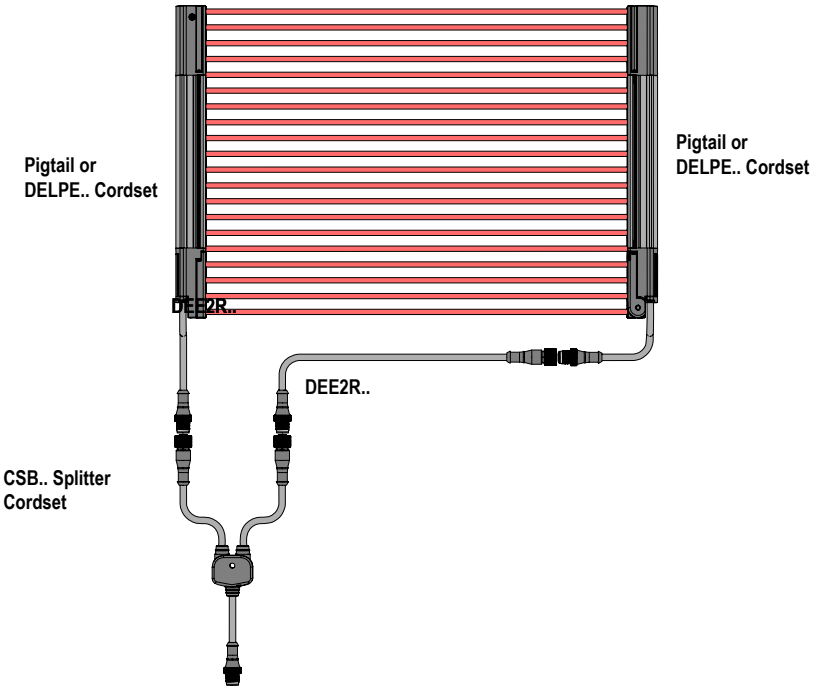

5.4.5 Commissioning Checkout

Perform this checkout procedure as part of the System installation after the System has been interfaced to the guarded machine, or whenever changes are made to the System (either a new configuration of the EZ-SCREEN LP Basic or changes to the machine).

WARNING:
- **Do not use the system until the checkouts are verified**
- Attempts to use the guarded/controlled machine before these checks are verified could result in serious injury or death.
- If all these checks cannot be verified, do not attempt to use the safety system that includes the Banner Engineering Corp. device and the guarded/controlled machine until the defect or problem has been corrected.

A Qualified Person must perform the procedure. Checkout results should be recorded and kept on or near the guarded machine as required by applicable standards.

To prepare the System for this checkout:

1. Examine the guarded machine to verify that it is of a type and design compatible with the EZ-SCREEN LP Basic System. For a list of appropriate and inappropriate applications, see Appropriate Applications and Limitations on page 9.
2. Verify that the EZ-SCREEN LP Basic is configured for the intended application.
3. Verify that the safety distance (minimum distance) from the closest danger point of the guarded machine to the defined area is not less than the calculated distance, per Calculating the Safety Distance (Minimum Distance) on page 13.
4. Verify that:
   a) Access to any dangerous parts of the guarded machine is not possible from any direction not protected by the EZ-SCREEN LP Basic System, hard (fixed) guarding, or supplemental safeguarding, and
   b) It is not possible for a person to stand between the defined area and the dangerous parts of the machine, or
   c) Supplemental safeguarding and hard (fixed) guarding, as described by the appropriate safety standards, are in place and functioning properly in any space (between the defined area and any hazard) which is large enough to allow a person to stand undetected by the EZ-SCREEN LP Basic.
5. If used, verify that all reset switches are mounted outside and in full view of the guarded area, out of reach of anyone inside the guarded area, and that means of preventing inadvertent use is in place.

6. Examine the electrical wiring connections between the EZ-SCREEN LP Basic OSSD outputs and the guarded machine's control elements to verify that the wiring meets the requirements stated in Electrical Connections to the Guarded Machine on page 37.
7. Inspect the area near the defined area (including work pieces and the guarded machine) for reflective surfaces (see Adjacent Reflective Surfaces on page 17). Remove the reflective surfaces if possible by relocating them, painting, masking or roughening them. Remaining problem reflections will become apparent during the Trip Test.
8. Verify that power to the guarded machine is Off. Remove all obstructions from the defined area. Apply power to the EZ-SCREEN LP Basic System.
9. Observe the Status indicators and Diagnostic Display:
   - **Lockout:** Status flashing red; all others Off
   - **Blocked:** Status On red; one or more Zone indicators On red; Reset On amber
   - **Clear:** Status On green [6]; all Zone indicators On green; Reset On amber
10. A Blocked condition indicates that one or more of the beams is misaligned or interrupted. To correct this situation, see the Optical Alignment (Optical Alignment on page 34) procedure under Initial Checkout Procedure on page 33.
11. After the green and amber Status indicators are On, **conduct the trip test** Conduct a Trip Test on page 36on each sensing field to verify proper System operation and to detect possible optical short circuits or reflection problems. **Do not continue until the EZ-SCREEN LP Basic passes the trip test.**

Important: Do not expose any individual to any hazard during the following checks.

WARNING:
- **Clear the guarded area before applying power or resetting the system**
- Failure to clear the guarded area before applying power could result in serious injury or death.
- Verify that the guarded area is clear of personnel and any unwanted materials before applying power to the guarded machine or before resetting the system.

12. Apply power to the guarded machine and verify that the machine does not start up.
13. Interrupt (block) the defined area with the supplied test piece and verify it is not possible for the guarded machine to be put into motion while the beam(s) is blocked.
14. Initiate machine motion of the guarded machine and, while it is moving, use the supplied test piece to block the defined area. Do not attempt to insert the test piece into the dangerous parts of the machine. Upon blocking any beam, the dangerous parts of the machine must come to a stop with no apparent delay.
15. Remove the test piece from the beam; verify that the machine does not automatically restart, and that the initiation devices must be engaged to restart the machine.
16. Remove electrical power to the EZ-SCREEN LP Basic. Both OSSD outputs should immediately turn Off, and the machine must not be capable of starting until power is re-applied to the EZ-SCREEN LP Basic.
17. Test the machine stopping response time, using an instrument designed for that purpose, to verify that it is the same or less than the overall system response time specified by the machine manufacturer.

Do not continue operation until the entire checkout procedure is complete and all problems are corrected.

5.5 Reference Wiring Diagrams

Other interfacing modules and solutions are available, see Accessories on page 47 and www.bannerengineering.com.

Note: For interfacing modules or remotely located safety I/O blocks where pin 5 of a 5-pin M12 QD is not earth ground, a 4-pin cordset where pin 5 is not physically present or is not electrically connected can be used (such as MQDEC-406SS double-ended cordset). In such situations, earth ground must be provided via the mounting brackets.

[6] The status indicator flashes green if reduced resolution is enabled.

5.5.1 Generic Emitter Wiring Diagram

Figure 31. Generic connection for an emitter

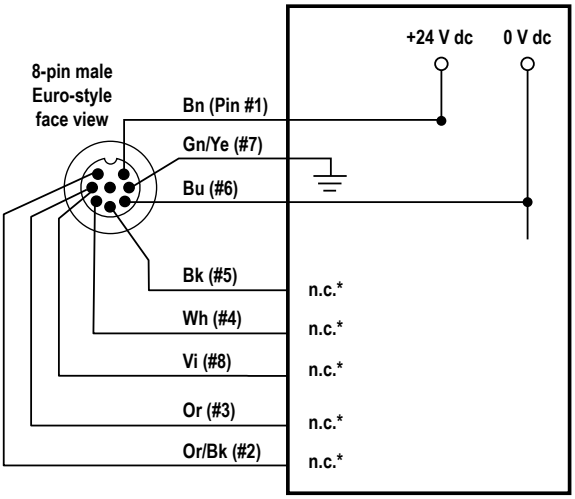

***NOTE: Pins 2, 3, 4 and 5 either are not connected, *or* are paralleled to same color wire from the 8-pin receiver cable.**

5.5.2 Generic Receiver Wiring—Self-checking Safety Module, Safety Controller, Safety PLC

Figure 32. Generic receiver wiring – self-checking Safety module, Safety Controller, Safety PLC (no monitoring, automatic reset)

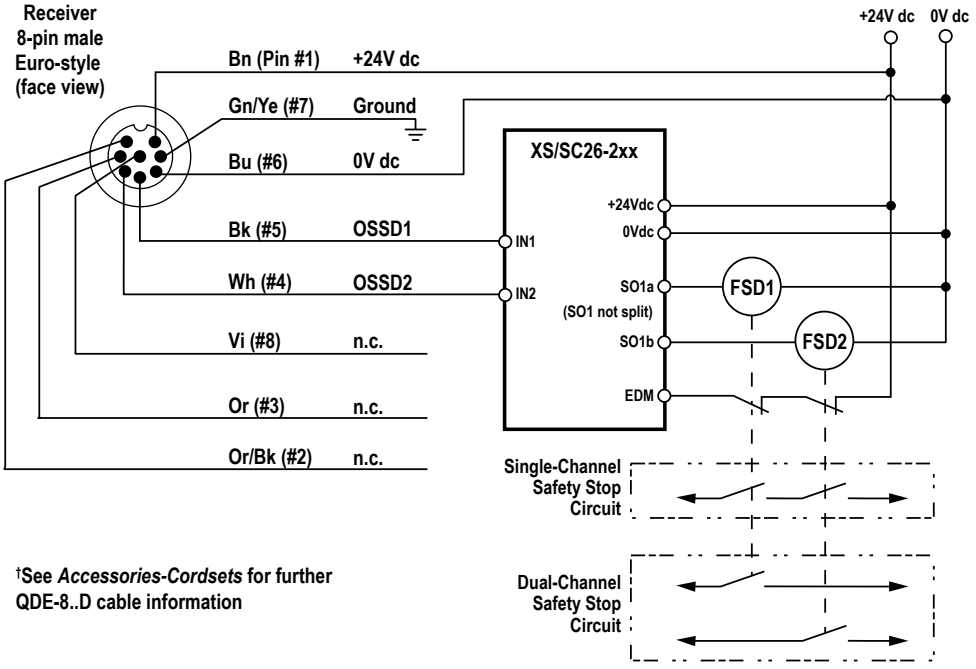

†See *Accessories-Cordsets* for further QDE-8..D cable information

6 System Operation

6.1 Security Protocol

Certain procedures for installing, maintaining, and operating the EZ-SCREEN LP Basic must be performed by either Designated Persons or Qualified Persons.

A **Designated Person** is identified and designated in writing, by the employer, as being appropriately trained and qualified to perform system resets and the specified checkout procedures on the EZ-SCREEN LP Basic. The Designated Person is empowered to:

- Perform manual resets and hold possession of the reset key (see)
- Perform the Daily Checkout Procedure

A **Qualified Person**, by possession of a recognized degree or certificate of professional training, or by extensive knowledge, training, and experience, has successfully demonstrated the ability to solve problems relating to the installation of the EZ-SCREEN LP Basic System and its integration with the guarded machine. In addition to everything for which the Designated Person is empowered, the Qualified Person is empowered to:

- Install the EZ-SCREEN LP Basic System
- Perform all checkout procedures
- Make changes to the internal configuration settings
- Reset the System following a Lockout condition

6.2 Status Indicators

Status indicators on both the emitter and receiver are clearly visible on each sensor's front panel.

Table 6: Emitter status indicators

Key	Description
A	Status Indicator (Red/Green)—Shows whether power is applied or the device is in a lockout condition.
B	7-segment Diagnostic Display—indicates specific error or configuration conditions.

Figure 33. Emitter

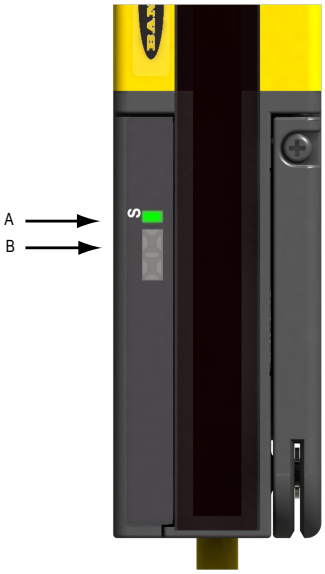

Figure 34. Receiver

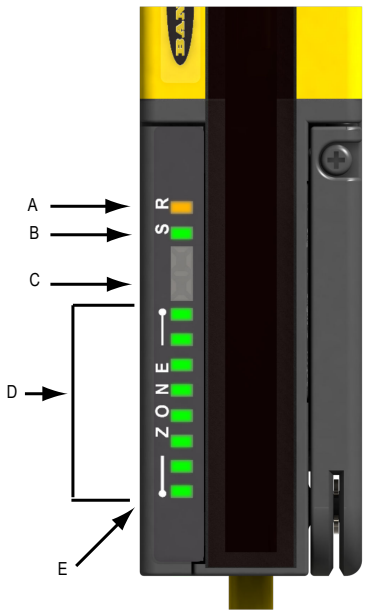

1-Digit Diagnostic Display—indicates specific error, configuration conditions, or total number of blocked beams.

Table 7: Receiver status indicators

Key	Description
A	Reset indicator (Yellow)—shows System status: • Run mode (ON)
B	Status indicator (Red/Green)—shows System status: • Outputs are ON or OFF (green ON or red ON) • The System is in Lockout condition (flashing red)
C	7-Segment Diagnostic Display
D	Zone indicators (Red/Green)—each shows status of approximately 1/8 of the total beams: • Aligned and clear (green ON) • Blocked and/or misaligned (red ON)
E	Zone 1 Indicator—indicates beam synchronization status

6.2.1 Emitter

A single bi-color Red/Green Status indicator shows whether power is applied, and whether the emitter is in a Run mode or a Lockout. A Diagnostic Display indicates a specific error code when the emitter is in Lockout; the display also momentarily indicates the scan code setting at power-up or when changed.

Table 8: Emitter Status Indicator Operation

Operating Status	Status Indicator	7-Segment Diagnostic Display
Power-up	Red Single Flash	Scan code flashes 3 times - sequentially C1 or C2
Run Mode	Green	-
Lockout	Flashing Red	Displays error code (see Lockout Conditions on page 56)

6.2.2 Receiver

A single bi-color red/green Status indicator shows when the OSSD outputs are On (green) or Off (red), or the System is in Lockout status (flashing red). An amber status indicator shows when the system is in Run mode. The Diagnostic Display indicates a specific error code when the receiver is in Lockout. The Diagnostic Display also momentarily indicates the scan code setting at power-up.

Bi-color red/green Zone indicators that show whether a section of the defined area is aligned and clear, or is blocked and/or misaligned. All models have 8 Zone indicators, each of which indicates Blocked/Clear conditions for approximately 1/8 of the total light screen.

6.2.3 Receiver Status Indicator Operation - Trip Output

Operating Mode	Reset Indicator	Status Indicator	Zone Indicators [7]	7-Segment Diagnostic Display	OSSD Outputs
Power-up	Off	Single-Flash Red	All Single-Flash Red	Scan code flashes 3 times - sequentially C1 or C2	Off

[7] f beam 1 is blocked, Zone indicators 2–8 will be Off, because beam 1 provides the synchronization signal for all the beams.

Operating Mode	Reset Indicator	Status Indicator	Zone Indicators [7]	7-Segment Diagnostic Display	OSSD Outputs
Alignment Mode - Beam 1 Blocked	Off	Red	Zone 1 Red, Others Off		Off
Alignment Mode - Beam 1 Clear	Off	Red	Red or Green	Total number of blocked beams	Off
Run Mode - Clear	On	Solid Green	All On Green		On
Run Mode - Blocked	On	Red	Red or Green	Total number of blocked beams	Off
Lockout	Off	Flashing Red	All Off	Displays error code (see Lockout Conditions on page 56)	Off

6.3 Normal Operation

6.3.1 System Power-Up

When power is applied, each sensor conducts self-tests to detect critical internal faults, determine configuration settings, and prepare the EZ-SCREEN LP Basic for operation. If either sensor detects a critical fault, scanning ceases, the receiver outputs remain Off and diagnostic information displays on the sensor's Diagnostic Display. If no faults are detected, the EZ-SCREEN LP Basic automatically enters Alignment mode, and the receiver looks for an optical sync pattern from the emitter. If the receiver is aligned and receives the proper sync pattern, it enters Run mode and begins scanning to determine the blocked or clear status of each beam. No manual reset operation is required.

6.3.2 Run Mode

If any beams become blocked while the EZ-SCREEN LP Basic is running, the receiver outputs turn Off within the stated EZ-SCREEN LP Basic response time (see Specifications on page 11). If all the beams then become clear, the receiver outputs come back On. No resets are needed. All required machine control resets are provided by the machine control circuit.

Internal Faults (Lockouts): If either sensor detects a critical fault, scanning ceases, the receiver outputs turn Off and diagnostic information displays on the sensor's Diagnostic Display. For resolution of error/fault conditions, see Lockout Conditions on page 56.

6.4 Periodic Checkout Requirements

To ensure continued reliable operation, the System must be checked out periodically. Banner Engineering highly recommends performing the System checkouts as described below. However, a Qualified Person should evaluate these recommendations, based on the specific application and the results of a machine risk assessment, to determine the appropriate content and frequency of checkouts.

At every shift change, power-up, and machine setup change, the Daily Checkout should be performed; this checkout may be performed by a Designated or Qualified Person.

Semi-annually, the System and its interface to the guarded machine should be thoroughly checked out; this checkout must be performed by a Qualified Person (see Schedule of Checkouts on page 46). A copy of these test results should be posted on or near the machine.

Whenever changes are made to the System (either a new configuration of the EZ-SCREEN LP Basic System or changes to the machine), perform the Commissioning Checkout (see Commissioning Checkout on page 40).

Note: Verify Proper Operation

The EZ-SCREEN LP Basic can operate as it is designed only if it and the guarded machine are operating properly, both separately and together. It is the user's responsibility to verify this, on a regular basis, as instructed in Schedule of Checkouts on page 46. Failure to correct such problems can result in an increased risk of harm.

Before the System is put back into service, verify that the EZ-SCREEN LP Basic System and the guarded machine perform exactly as outlined in the checkout procedures and any problem(s) are found and corrected.

[7] f beam 1 is blocked, Zone indicators 2–8 will be Off, because beam 1 provides the synchronization signal for all the beams.

7 Checkout Procedures

This section lists the schedule of checkout procedures and describes where each procedure is documented. Checkouts must be performed as described. Results should be recorded and kept in the appropriate place (for example, near the machine, and/or in a technical file).

Banner Engineering highly recommends performing the System checkouts as described. However, a qualified person (or team) should evaluate these generic recommendations considering their specific application and determine the appropriate frequency of checkouts. This will generally be determined by a risk assessment, such as the one contained in ANSI B11.0. The result of the risk assessment will drive the frequency and content of the periodic checkout procedures and must be followed.

7.1 Schedule of Checkouts

Checkout cards and this manual can be downloaded at http://www.bannerengineering.com.

Checkout Procedure	When to Perform	Where to Find the Procedure	Who Must Perform the Procedure
Trip Test	At Installation Any time the System, the guarded machine, or any part of the application is altered.	Conduct a Trip Test on page 36	Qualified Person
Commissioning Checkout	At Installation Whenever changes are made to the System (for example, either a new configuration of the EZ-SCREEN LP Basic or changes to the guarded machine).	Commissioning Checkout on page 40	Qualified Person
Shift/Daily Checkout	At each shift change Machine setup change Whenever the System is powered up During continuous machine run periods, this checkout should be performed at intervals not to exceed 24 hours.	**Daily Checkout Card** (Banner p/n 140045 for SLP.. stand-alone models) A copy of the checkout results should be recorded and kept in the appropriate place (for example, near or on the machine, in the machine's technical file).	Designated Person or Qualified Person
Semi-Annual Checkout	Every six months following System installation, or whenever changes are made to the System (either a new configuration of the EZ-SCREEN LP Basic or changes to the machine).	**Semi-Annual Checkout Card** (Banner p/n 140047) A copy of the checkout results should be recorded and kept in the appropriate place (for example, near or on the machine, in the machine's technical file).	Qualified Person

8 Accessories

Additional interfacing solutions and accessories continue to be added; refer to http://www.bannerengineering.com for a current list.

8.1 Cordsets

Machine interface cordsets provide power to the emitter/receiver pair. Cordsets typically have yellow PVC cables and black overmolds. A removable disconnect (RD) is required to connect directly to the sensor housing. QD connectors are used for cable-to-cable interconnections and connections to other devices.

8.1.1 Connection Options

Figure 35. Connection options



For an 8-pin RD cordset with an M12 QD, order DELPE-81D. For a 5-pin RD cordset with an M12 QD, order DELPE-51D. Using the DELPE-x1D cordset requires mating cordsets with either an 8-pin M12 connector (such as QDE-8..D, DEE2R-8..D, or CSB-M128..M1281) or a 5-pin M12 connector (such as QDE-5..D, or CSB-M125..M1251).

8.1.2 RD to Flying Leads Cordsets

Removable disconnect (RD) connector on one end; unterminated (cut to length) on other.

Model Number	Length	Wire	Cordset Color Code	
For Emitters and Receivers			**Color**	**Function**
RDLP-815D	4.6 m (15.1 ft)	8-conductor cable, 22 AWG/0.33 mm² 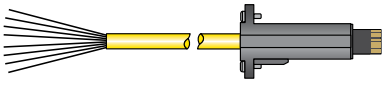	Brown	+24 V DC
			Orange/ Black	no connection
RDLP-825D	8 m (26.2 ft)		Orange	no connection
RDLP-850D	15.3 m (50.2 ft)		White	OSSD 2
RDLP-875D	23 m (75.5 ft)		Black	OSSD 1
RDLP-8100D	30.5 m (100.1 ft)		Blue	0 V DC
			Green/ Yellow	Gnd/Chassis
			Violet	no connection

8.1.3 M12 to Flying Leads Cordsets

M12 female QD connector on one end; unterminated (cut to length) on other to interface with guarded machine. PVC-jacketed overmold and cables.			
Model	**Length**	**Wire**	**Termination**
For 8-Pin Emitters and Receivers			
QDE-815D	4.5 m (15 ft)	22 AWG/0.33 mm²	8-pin M12 female connector on one end; cut to length
QDE-825D	7.6 m (24.9 ft)		
QDE-830D	9.1 m (30 ft)		
QDE-850D	15.2 m (49.8 ft)		
QDE-875D	22.8 m (74.7 ft)		
QDE-8100D	30.4 m (99.7 ft)		

Banner Cordset Pinout/Color Code			European 8-pin M12 Specification [8]			
Pin	**Color**	**Function**	**Pin**	**Color**	**Function**	**Connector (female face view)**
1	Brown	+24 V DC	1	White	+24 V DC	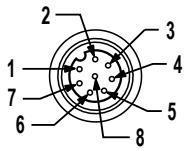
2	Orange/ Black	no connection	2	Brown	no connection	
3	Orange	no connection	3	Green	no connection	
4	White	OSSD #2	4	Yellow	OSSD #2	
5	Black	OSSD #1	5	Gray	OSSD #1	
6	Blue	0 V DC	6	Pink	0 V DC	
7	Green/ Yellow	Gnd/Chassis	7	Blue	Gnd/Chassis	
8	Violet	no connection	8	Red	no connection	

QDE-5..D 5-pin M12 QD to flying lead cordsets—Use QDE-5... cordsets with sensors that have a 300 mm cable and 5-pin M12 quick disconnect (models ending in P5). These cordsets have a M12 QD connector on one end and are unterminated (cut to length) on the other end to interface with guarded machine. PVC jacketed overmold and cables.

Model	Length	Banner Cordset Pinout/Color Code				M12 Connector (female face view)
		Pin	**Color**	**Emitter Function**	**Receiver Function**	
QDE-515D	4.5 m (15 ft)	1	Brown	+24 V DC	+24 V DC	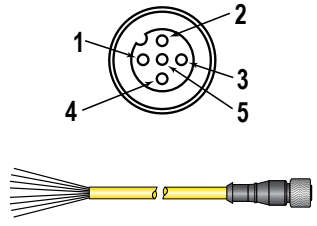
QDE-525D	7.6 m (25 ft)	2	White	no connection	OSSD2	
QDE-550D	15.2 m (50 ft)	3	Blue	0 V DC	0 V DC	
QDE-575D	22.8 m (75 ft)	4	Black	no connection	OSSD1	
QDE-5100D	30.4 m (100 ft)	5	Gn/Ye	Gnd/Chassis	Gnd/Chassis	

8.1.4 Splitter Cordsets

Splitter cordsets are used for easy interconnection between an EZ-SCREEN LP Basic receiver and its emitter, providing a single “homerun” cable. Model DEE2R-.. double-ended cordsets may be used to extend the QD trunk or either branch. (Branch #1 and branch #2 cable sections are 300 mm/1 ft long.)

Model QDE-8..D or QDE-5..D single-ended cordsets may be used to extend the QD trunk for cut-to-length applications.

The 8-pin splitter cordsets allow for an easy interconnection between an 8-pin receiver and 8-pin emitter, and provide a single trunk cable for the optional interchangeable ("swapable") connection.

[8] The European M12 Specification pin assignment and color codes are listed for reference only. Verify the suitability of these cables for an application.

8-Pin Threaded M12 Splitter Cordsets—Flat Junction			
Model	**Trunk (Male)**	**Branches (Female)**	**Pinout**
CSB-M1280M1280	No trunk	No branches	Male 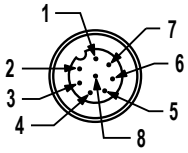 Female 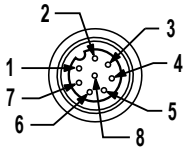 1 = Brown 2 = Or/Bk 3 = Orange 4 = White 5 = Black 6 = Blue 7 = Gn/Ye 8 = Violet
CSB-M1281M1281	0.3 m (1 ft)	2 x 0.3 m (1 ft)	
CSB-M1288M1281	2.44 m (8 ft)		
CSB-M12815M1281	4.57 m (15 ft)		
CSB-M12825M1281	7.62 m (25 ft)		
CSB-UNT825M1281	7.62 m (25 ft) Unterminated		
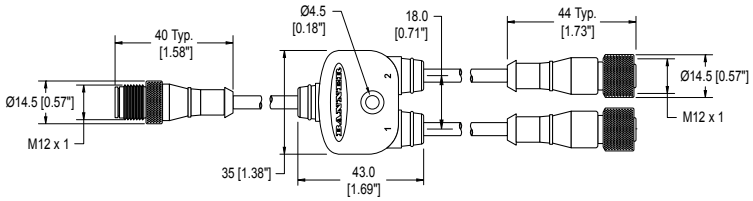			

The 5-pin splitter cordsets allow for an easy interconnection between a 5-pin receiver and 5-pin emitter, and provide a single trunk cable for the optional interchangeable ("swapable") connection.

5-Pin Threaded M12 Splitter Cordsets with Flat Junction—Double Ended				
Model	**Trunk (Male)**	**Branches (Female)**	**Pinout (Male)**	**Pinout (Female)**
CSB-M1251M1251	0.3 m (0.98 ft)	2 x 0.3 m (0.98 ft)	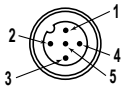	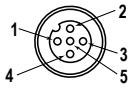
CSB-M1258M1251	2.44 m (8 ft)			
CSB-M12515M1251	4.57 m (15 ft)			
CSB-M12525M1251	7.62 m (25 ft)			
CSB-UNT525M1251	7.62 m (25 ft) Unterminated			
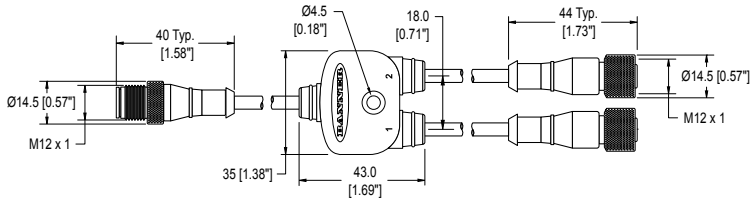			1 = Brown 2 = White 3 = Blue	4 = Black 5 = Green/Yellow

8.1.5 Male M12/Euro to Female M12/Euro QD Cordsets

Used for extending either the branch or trunk of a model CSB splitter cordset. M12/Euro-style connectors, female to male (rotateable). Overmold and cables are PVC-jacketed.

Model	Length	Wire	Termination
DEE2R-81D	0.3 m (1 ft)	8-conductor cable, 22 AWG/0.33 mm²	M12/Euro QD fitting at each end, one male, one female
DEE2R-83D	0.9 m (3 ft)		
DEE2R-88D	2.5 m (8 ft)		
DEE2R-815D	4.6 m (15 ft)		
DEE2R-825	7.6 m (25 ft)		
DEE2R-830D	9.1 m (30 ft)		

Model	Length	Wire	Termination
DEE2R-850D	15.2 m (50 ft)		
DEE2R-875D	22.9 m (75 ft)		
DEE2R-8100D	30.5 m (100 ft)		

8.1.6 DEE8-..D Adapter M12 QD Cordsets

Used to convert the 8-pin M12 QD from the EZ-SCREEN LP Basic to a 5-pin female M12 QD for connection to a safety BUS gateway/node, a “smart” self-monitored safety module, safety controller, or safety PLC. Overmold and cables are PVC-jacketed.

DEE8-4..D cordsets do not have the pin 5 GND/chassis connection. GND/chassis connection should be made via the mounting hardware.

Model	Length	Wire	Pinout
DEE8-41D	0.3 m (1 ft)	4-conductor cable, 22 AWG/ 0.33 mm²	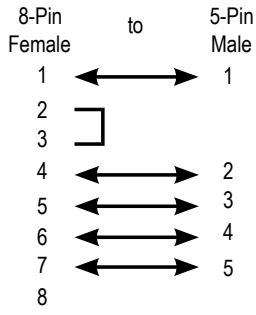
DEE8-425D	7.6 m (25 ft)		
DEE8-51D	0.3 m (1 ft)	5-conductor cable, 22 AWG/ 0.33 mm²	
DEE8-525D	7.6 m (25 ft)		

8.1.7 Bulkhead Connector

Connector for panel connection of EZ-SCREEN LP Basic component cables.

Model	Connection	Dimensions
PMEF-810D	8-pin Euro-style female connector 3 m (10 ft) wires, cut to length (Banner color code); 22 AWG/0.33 mm²	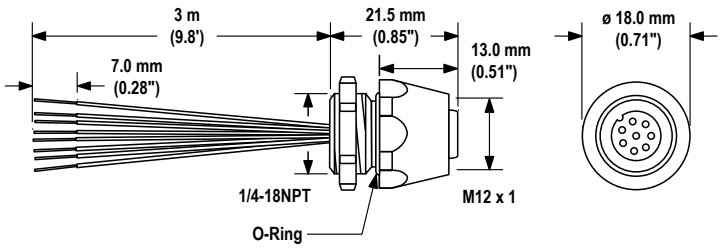

8.2 Safety Controllers

Safety Controllers provide a fully configurable, software-based safety logic solution for monitoring safety and non-safety devices.

For additional models and XS26 expansion modules, see instruction manual p/n 174868 (XS/SC26-2).

Table 9: Safety controller models

Non-Expandable Models	Expandable Models	Description
SC26-2	**XS26-2**	26 convertible I/O and 2 redundant solid state safety outputs
SC26-2d	**XS26-2d**	26 convertible I/O and 2 redundant solid state safety outputs with display
SC26-2e	**XS26-2e**	26 convertible I/O and 2 redundant solid state safety outputs with Ethernet

Non-Expandable Models	Expandable Models	Description
SC26-2de	**XS26-2de**	26 convertible I/O and 2 redundant solid state safety outputs with display and Ethernet
SC10-2roe		10 inputs, 2 redundant relay safety outputs (3 contacts each) (ISD and Ethernet compatible)
	XS26-ISDd	26 inputs, 2 redundant solid state safety outputs with display, Ethernet, and 8 ISD channels

8.3 Universal (Input) Safety Modules

UM-FA-xA Safety Modules are safety monitoring devices that provide forced-guided, mechanically-linked relay (safety) outputs for the EZ-SCREEN LP Basic system with a 5-pin interconnect (P5) or 8-pin interconnect (P8) when a manual reset (latch) is required by the application. See datasheet p/n 141249 for more information.

Model	Description
UM-FA-9A	3 normally open (N.O.) redundant-output 6 amp contacts
UM-FA-11A	2 normally open (N.O.) redundant-output 6 amp contacts, plus 1 normally closed (N.C.) auxiliary contact

8.4 Muting Module

Provides the muting capability for the EZ-SCREEN LP Basic.

See Banner manual 116390 for more information and additional cabling options.

Model	Description	
MMD-TA-11B	DIN-mount Muting module	2 N.O. safety outputs (6 amps), 2 or 4 muting inputs, SSI, override input; IP20; terminal connections
MMD-TA-12B		2 OSSD outputs, 2 or 4 muting inputs, SSI, override input; IP20; terminal connections

8.5 Snap-On Lens Shields

Impact-resistant copolyester lens shields snap easily over entire length of sensor housing, protecting against metal cutting fluids and other chemicals. The lens shields are not sealed at the top and bottom, and decrease sensing range by approximately 15% when they are protecting both the emitter and receiver.

Order one lens shield per sensor.

Sensor Model	Lens Shield Model	
SLPVA..-270	**LPSS-270**	
SLPVA..-410	**LPSS-410**	
SLPVA..-550	**LPSS-550**	
SLPVA..-690	**LPSS-690**	

8.6 EZ-LIGHT® for EZ-SCREEN®

Provides clear, 360° indication of the of the EZ-SCREEN receiver's output status. Use with a CSB splitter cable and optional DEE2R double-ended cables. See data sheet p/n 121901 for more information.

Models		Construction	Connector/LED Function/Inputs
	**M18RGX8PQ8** [9]	Nickel-plated brass housing, M18x1 thread; thermoplastic lens Fully encapsulated IP67	8-pin Euro-style Integral QD Red/Green indication follows OSSD output of the EZ-SCREEN receiver **ON Red:**—Power ON Beam Blocked or Lockout **ON Green:**—Power ON Beam Clear PNP (Sourcing)
	**T18RGX8PQ8**	Thermoplastic polyester housing, thermoplastic lens Fully encapsulated IP67	
	**T30RGX8PQ8**		
	**K30LRGX8PQ8**	Polycarbonate housing, 30 mm thermoplastic dome, 22 mm base mount Fully encapsulated, IP67	
	**K50LRGX8PQ8**	Polycarbonate housing, 50 mm thermoplastic dome, 30 mm base mount Fully encapsulated, IP67	
	**K80LRGX8PQ8**	Polycarbonate housing, 50 mm thermoplastic dome, flat or DIN mount Encapsulated electronics, IP67	

8.7 MSA Series Stands

- Provides mounting T-slots with 20 mm dimension between slots
- Base included. Available without a base by adding the suffix **NB** to the model number (for example, **MSA-S42-1NB**).

Stand Model	Pole Height	Useable Stand Height	Overall Stand Height
MSA-S24-1	610 mm (24 in)	483 mm (19 in)	616 mm (24.25 in)
MSA-S42-1	1067 mm (42 in)	940 mm (37 in)	1073 mm (42.25 in)
MSA-S66-1	1676 mm (66 in)	1550 mm (61 in)	1682 mm (66.25 in)
MSA-S84-1	2134 mm (84 in)	2007 mm (79 in)	2140 mm (84.25 in)
MSA-S105-1	2667 mm (105 in)	2667 mm (100 in)	2673 mm (105.25 in)

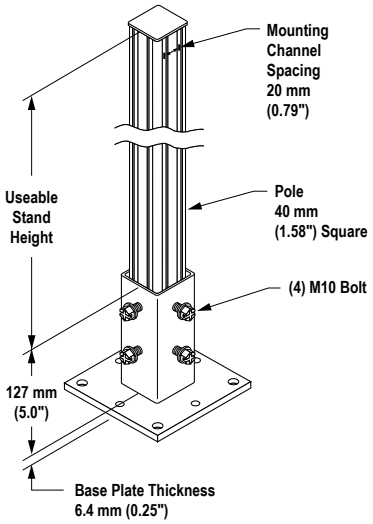

8.8 MSM Series Corner Mirrors

- Compact for light-duty applications

[9] Available in a kit that includes one M18 EZ-LIGHT, one SMB18A mounting bracket, and hardware for mounting to the side channel of an EZ-SCREEN housing (kit model number **EZA-M18RGX8PQ8)**.

- Rear-surface glass mirrors are rated at 85% efficiency. The total sensing range decreases by approximately 8% per mirror. See the MSM Series Corner Mirror datasheet (p/n 43685) or http://www.bannerengineering.com for further information.
- Mounting brackets may be inverted from the positions shown (flanges pointing "inward" instead of "outward," as shown). When this is done, dimension L1 decreases by 57 mm.
- MSAMB adapter bracket kit included with each MSA stand.

Mirror Model	Part Number	Reflective Area Length (Y)	Mounting Length (L1)	Mirror Height Overall (L2)
MSM4A	43162	165 mm (6.5 in)	221 mm (8.7 in)	191 mm (7.5 in)
MSM8A	43163	267 mm (10.5 in)	323 mm (12.7 in)	292 mm (11.5 in)
MSM12A	43164	356 mm (14 in)	411 mm (16.2 in)	381 mm (15 in)
MSM16A	43165	457 mm (18 in)	513 mm (20.2 in)	483 mm (19 in)
MSM20A	43166	559 mm (22 in)	615 mm (24.2 in)	584 mm (23 in)
MSM24A	43167	660 mm (26 in)	716 mm (28.2 in)	686 mm (27 in)
MSM28A	43168	762 mm (30 in)	818 mm (32.2 in)	787 mm (31 in)
MSM32A	43169	864 mm (34 in)	919 mm (36.2 in)	889 mm (35 in)
MSM36A	43170	965 mm (38 in)	1021 mm (40.2 in)	991 mm (39 in)
MSM40A	43171	1067 mm (42 in)	1123 mm (44.2 in)	1092 mm (43 in)
MSM44A	43172	1168 mm (46 in)	1224 mm (48.2 in)	1194 mm (47 in)
MSM48A	43173	1270 mm (50 in)	1326 mm (52.2 in)	1295 mm (51 in)

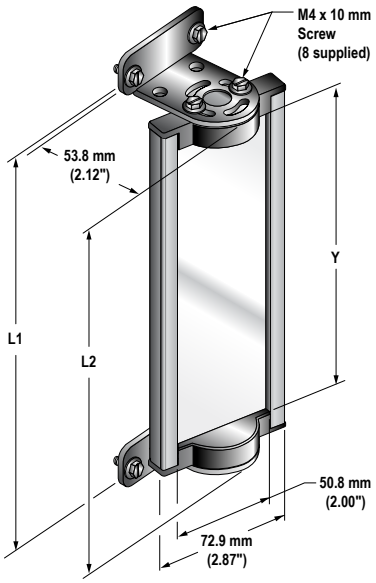

MSM Model	EZ-SCREEN Models			
	SLS Defined Area	LP Defined Area	LS Defined Area	Type 2 Defined Area
MSM4A				
MSM8A	150			150
MSM12A	300	270	280	300
MSM16A		410	350	
MSM20A	450		490	450
MSM24A	600	550	560	600
MSM28A		690	630/700	
MSM32A	750		770	750
MSM36A	900	830	840/910	900
MSM40A		970	980	
MSM44A	1050	1110	1050/1120	1050
MSM48A	1200		1190	1200

8.9 SSM Series Corner Mirrors

- Robust for heavy-duty applications
- Extra wide for use with long-range optical safety systems
- Rear-surface glass mirrors are rated at 85% efficiency. The total sensing range decreases by approximately 8% per mirror. See SSM Series Corner Mirror datasheet (p/n 61934) or www.bannerengineering.com for further information.
- Stainless steel reflective surface models are also available. See datasheet p/n 67200.
- Robust construction, two mounting brackets and hardware included.
- EZA-MBK-2 adapter bracket is required for use with MSA Series stand, refer to the mounting bracket accessories list.
- Brackets may be inverted from the positions shown, decreasing dimension L1 by 58 mm (2.3 in).

Mirror Model [10]	Defined Area Length	Reflective Area Y	Mounting 1	Mounting L2	
SSM-200	150 mm (5.9 in)	200 mm (7.9 in)	278 mm (10.9 in)	311 mm (12.2 in)	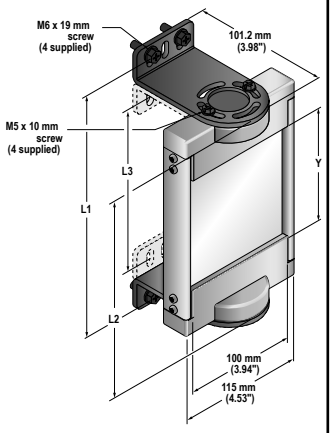
SSM-375	300 mm (11.8 in)	375 mm (14.8 in)	486 mm (19.1 in)	453 mm (17.8 in)	
SSM-550	450 mm (17.7 in)	550 mm (21.7 in)	661 mm (26.0 in)	628 mm (24.7 in)	
SSM-675	600 mm (23.6 in)	675 mm (26.6 in)	786 mm (31.0 in)	753 mm (29.6 in)	
SSM-825	750 mm (29.5 in)	825 mm (32.5 in)	936 mm (36.9 in)	903 mm (35.6 in)	

8.10 Brackets

Contact Banner Engineering for more information.

Model	Description	
LPA-MBK-10	• End-mount bracket • 14 ga (1.9 mm) steel, black zinc plated • Includes two brackets and hardware	
LPA-MBK-11	• End-mount bracket • 360° rotation • 14 ga (1.9 mm) steel, black zinc plated • Includes two brackets and hardware	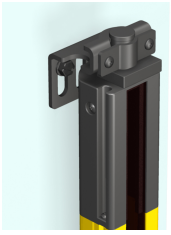
LPA-MBK-12	• Side-mount bracket • +10°/ −30° rotation • 14 ga (1.9 mm) steel, black zinc plated • Includes one bracket and hardware	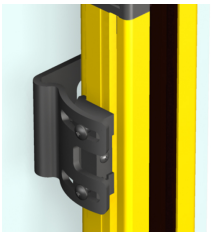
LPA-MBK-13	• Adaptor for side-mount bracket LPA-MBK-12 • Reorients sensor rotation by 90° (+10°/ −30°) • 14 ga (1.9 mm) steel, black zinc plated • Includes 1 bracket and hardware	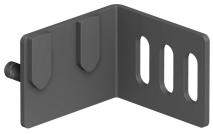

[10] Stainless steel reflective surface models are available by adding model number suffix "**-S**" (for example, **SSM-375-S**); range reduction for these models is approximately 30% per mirror. See datasheet p/n 67200.

Model	Description	
LPA-MBK-16	• Side-mounting bracket provides a mounting option that is fully adjustable (lateral and +15/-20° rotational) from the face of the sensor and allows "no blind zone" mounting with minimal or no "gaps" in detection • Zinc diecast • Includes 1 bracket and hardware	
LPA-MBK-20	• Universal adapter bracket for mounting to engineered/slotted aluminum framing (for example, 80/20™, Bosch) • Retrofit for Banner MS/US/MG; clearance for M4 and M6 hardware • Use with LPA-MBK-11, -12, or -13 • 12 ga (2.66 mm) steel, black zinc plated • Includes 1 bracket and hardware	
LPA-MBK-22	• End-cap bracket for mounting sensor inside Unistrut® metal framing; uses end-cap plates from bracket LPA-MBK-11 • Fits Unistrut P1000 size, with M6 or 1/4" channel nuts • 14 ga (1.90 mm) steel, black zinc plated; diecast zinc clamps • Includes 2 brackets and hardware	
LPA-MBK-Pxxx	• L-shaped bracket for one emitter or receiver protects sensor from weld flash, impact. • Sized to match sensor length; replace “xxx” in model number with sensor size (for example, LPAMBK- P270 for use with sensor SLP..-270..); bracket studs mate with side-mount brackets LPA-MBK-12, included with sensor. Corner notch accommodates cable routing. • +10°/ −30° sensor rotation • 12 ga (2.66 mm) steel, black zinc plated or painted • Includes 1 bracket and hardware	

8.11 Alignment Aids

Model	Description	
LAT-1-LP	Self-contained visible-beam laser tool for aligning any EZ-SCREEN LP Basic emitter/receiver pair. Includes retroreflective target material and mounting clip.	
LPA-LAT-2	Replacement adaptor (clip) hardware for EZ-SCREEN LP Basic models	
LPA-LAT-1	Clip-on retroreflective LAT target	
BRT-THG-2-100	Two-inch retroreflective tape, 100 ft	
BT-1	Beam Tracker	

9 Troubleshooting

9.1 Lockout Conditions

A Lockout condition causes all of the EZ-SCREEN LP Basic OSSD outputs to turn or remain Off, sending a stop signal to the guarded machine. Each sensor provides diagnostic error codes to assist in the identification of the cause(s) of lockouts (see *Receiver Error Codes* and *Emitter Error Codes*) or the Diagnostic Error Code label supplied in the documentation pack).

In addition, emitters internally monitor the infrared LEDs, and provide a health status indication whenever one of these components has degraded. The emitter will not lockout in this situation. Rather, the indication is intended to notify the user that the emitter should be replaced soon.

The following tables indicate a sensor lockout condition:

Table 10: Receiver Lockout Conditions

Reset indicator	Off
Status indicator	Flashing Red
Zone indicators	Off
Diagnostic display	Error code (flashing)

Table 11: Emitter Lockout Conditions

Status indicator	Flashing Red
Diagnostic Display	Error code (flashing)

9.2 Recovery Procedures

To recover from a Lockout condition, all errors must be corrected and power to the device cycled.

9.2.1 Emitter Error Codes

Diagnostic Display [11]	Error Description	Cause of Error and Appropriate Action
25	**Emitter Error** This error can occur either due to excessive electrical noise or due to an internal failure.	• Reset the emitter by cycling power • If the error clears, perform the daily checkout procedure (per EZ-SCREEN Checkout Procedures: Shift and Daily Checkout Procedure; Daily Checkout Card). If the System checks out, resume operation. If the System fails, replace the emitter • If the error continues, check the ground connection (see Cordsets on page 47) • If the sensor has a good earth ground connection, check for electrical noise (see Electrical and Optical Noise on page 57) • If the error persists, replace the emitter
26	**Excessive Noise Error** This error can occur due to excessive electrical noise.	• Reset the emitter by cycling power • If the error clears, perform the daily checkout procedure (per EZ-SCREEN Checkout Procedures: Shift and Daily Checkout Procedure; Daily Checkout Card). If the System checks out, resume operation. If the System fails, replace the emitter • If the error continues, check the ground connection (see Cordsets on page 47) • If the sensor has a good earth ground connection, check for electrical noise (see Electrical and Optical Noise on page 57) • If the error persists, replace the emitter
27	**Emitter LED Problem** This is not an error.	This indication can occur due to a potential problem with an LED and is provided as an early warning indicator
“Axx”/“cxx”, where “xx” are alpha-numeric characters	**Advanced Diagnostics** for the purpose of factory troubleshooting and repair; not intended for field troubleshooting.	If advanced diagnostic codes are inadvertently displayed, cycle power to the device to return to the standard error display

[11] Multiple-digit codes are sequential, followed by a pause.

9.2.2 Receiver Error Codes

Diagnostic Display [12]	Error Description	Cause of Error and Appropriate Action
	**Output Error** **Error is caused by:** • one or both outputs being shorted to a power supply (high or low) • by shorting OSSD 1 to OSSD 2 • by an overload (greater than 0.5 A)	• Disconnect the OSSD loads and reset the receiver. • If the error clears, the problem is in the OSSD load(s) or in the load wiring. • If the error continues with no load connected, replace the receiver.
	**Receiver Error** This error can occur due to either excessive electrical noise or an internal failure.	• Perform a reset per EZ-SCREEN Checkout Procedures: Shift and Daily Checkout Procedure. • If the error clears, perform a Daily Checkout procedure (per EZ-SCREEN Checkout Procedures: Shift and Daily Checkout Procedure; Daily Checkout Card) and if the System checks out, resume operation. If the System fails the Daily Checkout procedure, replace the receiver. • If the error continues, check the ground connection (pin 7). • If the sensor has a good earth ground connection to pin 7, perform the Initial Checkout procedure (per Initial Checkout Procedure on page 33). • If the error clears, check the external connections and configuration settings. • If the error continues, replace the receiver.
“Axx”/“bxx”/"Fxx", where “xx” are alpha-numeric characters	**Advanced Diagnostics** for the purpose of factory troubleshooting and repair; not intended for field troubleshooting.	If advanced diagnostic codes are inadvertently displayed, cycle power to the device.

9.3 Electrical and Optical Noise

The EZ-SCREEN LP Basic is designed and manufactured to be highly resistant to electrical and optical noise and to operate reliably in industrial settings. However, serious electrical and/or optical noise may cause a random Trip condition. In extreme electrical noise cases, a Lockout is possible. To minimize the effects of transitory noise, the EZ-SCREEN LP Basic responds to noise only if the noise is detected on multiple consecutive scans.

If random nuisance Trips occur, check the following:

- Poor connection between the sensor and earth ground
- Optical interference from adjacent light screens or other photoelectrics
- Sensor input or output wires routed too close to noisy wiring

9.3.1 Check for Sources of Electrical Noise

It is important that the light screen sensors have a good earth ground. Without this, the System can act like an antenna and random Trips and Lockouts can occur.

All EZ-SCREEN LP Basic wiring is low voltage; running these wires alongside power wires, motor/servo wires, or other high-voltage wiring can inject noise into the EZ-SCREEN LP Basic System. It is good wiring practice (and may be required by code) to isolate EZ-SCREEN LP Basic wires from high-voltage wires.

1. Use the Banner model BT-1 Beam Tracker Alignment Aid (see Alignment Aids on page 55) to detect electrical transient spikes and surges.
2. Cover the lens of the BT-1 with electrical tape to block optical light from entering the receiver lens.
3. Press the RCV button on the BT-1 and position the Beam Tracker on the wires going to the EZ-SCREEN LP Basic or any other nearby wires.
4. Install proper transient suppression across the load to reduce the noise.

9.3.2 Check for Sources of Optical Noise

1. Turn off the emitter or completely block the emitter.
2. Press the RCV button on the Banner BT-1 Beam Tracker Alignment Aid and move it across the full length of the receiver’s sensing window to check for light at the receiver.

[12] Multiple-digit codes are sequential, followed by a pause.

3. If the BT-1's indicator lights, check for emitted light from other sources (other safety light screens, grids or points, or standard photoelectric sensors).

10 Product Support and Maintenance

10.1 Cleaning

EZ-SCREEN LP Basic components are constructed of aluminum with a yellow painted finish and are rated IP54. Lens covers are acrylic. Components are best cleaned using mild detergent or window cleaner and a soft cloth. Avoid cleaners containing alcohol, as they may damage the acrylic lens covers.

10.2 Replacement Parts

Model	Description
STP-13	14 mm test piece (14 mm resolution systems)
STP-16	25 mm test piece (25 mm resolution systems)

10.3 Warranty Service

Contact Banner Engineering for troubleshooting of this device. **Do not attempt any repairs to this Banner device; it contains no field-replaceable parts or components.** If the device, device part, or device component is determined to be defective by a Banner Applications Engineer, they will advise you of Banner's RMA (Return Merchandise Authorization) procedure.

Important: If instructed to return the device, pack it with care. Damage that occurs in return shipping is not covered by warranty.

10.4 Manufacturing Date

Every EZ-SCREEN LP Basic produced is marked with a code that defines the week and year of manufacture and manufacturing location. The code format (U.S. Standard format) is: **YYWWL**

- YY = Year of manufacture, 2 digits
- WW = Week of manufacture, 2 digits
- L = Banner-specific code, 1 digit

Example: 1809H = 2018, Week 9.

10.5 Disposal

Devices that are no longer in use should be disposed of according to the applicable national and local regulations.

10.6 Literature

The following documentation is supplied with each EZ-SCREEN LP Basic receiver. Additional copies are available at no charge; contact Banner Engineering or visit www.bannerengineering.com.

Part Number	Description
205790	EZ-SCREEN LP Basic Safety Light Screen Instruction Manual
140045	Checkout Procedure Card (Daily)—Stand-Alone Systems
140047	Checkout Procedure Card (Semi-Annual)
147360	EZ-SCREEN LP Bracket Supplement

10.7 Contact Us

Banner Engineering Corp. headquarters is located at:

9714 Tenth Avenue North
Minneapolis, MN 55441, USA
Phone: + 1 888 373 6767

For worldwide locations and local representatives, visit www.bannerengineering.com.

10.8 Banner Engineering Corp Limited Warranty

Banner Engineering Corp. warrants its products to be free from defects in material and workmanship for one year following the date of shipment. Banner Engineering Corp. will repair or replace, free of charge, any product of its manufacture which, at the time it is returned to the factory, is found to have been defective during the warranty period. This warranty does not cover damage or liability for misuse, abuse, or the improper application or installation of the Banner product.

THIS LIMITED WARRANTY IS EXCLUSIVE AND IN LIEU OF ALL OTHER WARRANTIES WHETHER EXPRESS OR IMPLIED (INCLUDING, WITHOUT LIMITATION, ANY WARRANTY OF MERCHANTABILITY OR FITNESS FOR A PARTICULAR PURPOSE), AND WHETHER ARISING UNDER COURSE OF PERFORMANCE, COURSE OF DEALING OR TRADE USAGE.

This Warranty is exclusive and limited to repair or, at the discretion of Banner Engineering Corp., replacement. **IN NO EVENT SHALL BANNER ENGINEERING CORP. BE LIABLE TO BUYER OR ANY OTHER PERSON OR ENTITY FOR ANY EXTRA COSTS, EXPENSES, LOSSES, LOSS OF PROFITS, OR ANY INCIDENTAL, CONSEQUENTIAL OR SPECIAL DAMAGES RESULTING FROM ANY PRODUCT DEFECT OR FROM THE USE OR INABILITY TO USE THE PRODUCT, WHETHER ARISING IN CONTRACT OR WARRANTY, STATUTE, TORT, STRICT LIABILITY, NEGLIGENCE, OR OTHERWISE.**

Banner Engineering Corp. reserves the right to change, modify or improve the design of the product without assuming any obligations or liabilities relating to any product previously manufactured by Banner Engineering Corp. Any misuse, abuse, or improper application or installation of this product or use of the product for personal protection applications when the product is identified as not intended for such purposes will void the product warranty. Any modifications to this product without prior express approval by Banner Engineering Corp will void the product warranties. All specifications published in this document are subject to change; Banner reserves the right to modify product specifications or update documentation at any time. Specifications and product information in English supersede that which is provided in any other language. For the most recent version of any documentation, refer to: www.bannerengineering.com.

For patent information, see www.bannerengineering.com/patents.

11 Glossary

A

ANSI (American National Standards Institute)

Acronym for the American National Standards Institute, an association of industry representatives that develops technical standards (including safety standards). These standards comprise a consensus from a variety of industries on good practice and design. ANSI standards relevant to application of safety products include the ANSI B11 Series, and ANSI/RIA R15.06. See Standards and Regulations on page 5.

Auto Power-Up

A safety light curtain system feature that enables the system to be powered up into Run mode (or recover from a power interruption) without requiring a manual reset.

B

Blanking

A programmable feature of a safety light curtain system which allows the light curtain to ignore certain objects located within the defined area. See **Floating Blanking** and **Reduced Resolution**.

Blocked Condition

A condition that occurs when an opaque object of sufficient size blocks/interrupts one or more light curtain beams. When a blocked condition occurs, OSSD1 and OSSD2 outputs simultaneously turn off within the system response time.

Brake

A mechanism for stopping, slowing, or preventing motion.

C

Cascade

Series connection (or "daisy-chaining") of multiple emitters and receivers.

CE

Abbreviation for "Conformité Européenne" (French translation of "European Conformity"). The CE mark on a product or machine establishes its compliance with all relevant European Union (EU) Directives and the associated safety standards.

Clutch

A mechanism that, when engaged, transmits torque to impart motion from a driving member to a driven member.

Control Reliability

A method of ensuring the performance integrity of a control system or device. Control circuits are designed and constructed so that a single failure or fault within the system does not prevent the normal stopping action from being applied to the machine when required, or does not create unintended machine action, but does prevent initiation of successive machine action until the failure is corrected.

CSA

Abbreviation for Canadian Standards Association, a testing agency similar to Underwriters Laboratories, Inc. (UL) in the United States. A CSA-certified product has been type-tested and approved by the Canadian Standards Association as meeting electrical and safety codes.

D

Defined Area

The "screen of light" generated by a safety light curtain system, defined by the height and the safety distance (minimum distance) of the system.

Designated Person

A person or persons identified and designated in writing, by the employer, as being appropriately trained and qualified to perform a specified checkout procedure.

E

Emitter

The light-emitting component of a safety light curtain system, consisting of a row of synchronized modulated LEDs. The emitter, together with the receiver (placed opposite), creates a "screen of light" called the defined area.

External Device Monitoring (EDM)

A means by which a safety device (such as a safety light curtain) actively monitors the state (or status) of external devices that may be controlled by the safety device. A lockout of the safety device will result if an unsafe state is detected in the external device. External device(s) may include, but are not limited to: MPCEs, captive contact relays/contactors, and safety modules.

F

Failure to Danger

A failure which delays or prevents a machine safety system from arresting dangerous machine motion, thereby increasing risk to personnel.

Final Switching Device (FSD)

The component of the machine's safety-related control system that interrupts the circuit to the machine primary control element (MPCE) when the output signal switching device (OSSD) goes to the OFF-state.

Fixed Blanking

A programming feature that allows a safety light curtain system to ignore objects (such as brackets or fixtures) which will always be present at a specific location within the defined area. The presence of these objects will not cause the system's safety outputs (for example, Final Switching Devices) to trip or latch. If any fixed objects are moved within or removed from the defined area, a Lockout condition results.

Floating Blanking

See **Reduced Resolution**.

FMEA (Failure Mode and Effects Analysis)

A testing procedure by which potential failure modes in a system are analyzed to determine their results or effects on the system. Component failure modes that produce either no effect or a Lockout condition are permitted; failures which cause an unsafe condition (a failure to danger) are not. Banner safety products are extensively FMEA tested.

G

Guarded Machine

The machine whose point of operation is guarded by the safety system.

H

Hard (Fixed) Guard

Screens, bars, or other mechanical barriers affixed to the frame of the machine intended to prevent entry by personnel into the hazardous area(s) of a machine, while allowing the point of operation to be viewed. The maximum size of the openings is determined by the applicable standard, such as Table O-10 of OSHA 29CFR1910.217, also called a "fixed barrier guard."

Harm

Physical injury or damage to the health of people, which may result through direct interaction with the machine or through indirect means, as a result of damage to property or to the environment.

Hazard Point

The closest reachable point of the hazardous area.

Hazardous Area

An area that poses an immediate or impending physical hazard.

I

Internal Lockout

A Lockout condition that is due to an internal safety system problem. Generally, indicated by the red Status indicator LED (only) flashing. Requires the attention of a Qualified Person.

K

Key Reset (Manual Reset)

A key-operated switch used to reset a safety light curtain system to Run mode following a Lockout condition, or to enable machine operation following a Manual Start/Restart (Latch) condition. Also refers to the act of using the switch.

L

Manual Start/Restart (Latch) Condition

The safety outputs of a safety light curtain system turn off when an object completely blocks a beam. In a Manual Start/Restart condition, the safety outputs stay off when the object is removed from the defined area. To re-energize the outputs, perform a proper manual reset.

Lockout Condition

A safety light curtain condition that is automatically attained in response to certain failure signals (an internal lockout). When a Lockout condition occurs, the safety light curtain's safety outputs turn OFF; the failure must be corrected and a manual reset is required to return the system to Run mode.

M

Machine Primary Control Element (MPCE)

An electrically powered element, external to the safety system, which directly controls the machine's normal operating motion in such a way that the element is last (in time) to operate when machine motion is either initiated or arrested.

Machine Response Time

The time between the activation of a machine stopping device and the instant when the dangerous parts of the machine reach a safe state by being brought to rest.

Minimum Object Sensitivity (MOS)

The minimum-diameter object that a safety light curtain system can reliably detect. Objects of this diameter or greater will be detected anywhere in the defined area. A smaller object can pass undetected through the light if it passes exactly midway between two adjacent light beams. Also known as MODS (Minimum Object Detection Size). See also **Specified Test Piece**.

Muting

The automatic suspension of the safeguarding function of a safety device during a non-hazardous portion of the machine cycle.

O

OFF State

The state in which the output circuit is interrupted and does not permit the flow of current.

ON State

The state in which the output circuit is complete and permits the flow of current.

OSHA (Occupational Safety and Health Administration)

A U.S. Federal agency, Division of the U.S. Department of Labor, that is responsible for the regulation of workplace safety.

OSSD

Output Signal Switching Device. The safety outputs that are used to initiate a stop signal.

P

Part-Revolution Clutch

A type of clutch that may be engaged or disengaged during the machine cycle. Part-revolution clutched machines use a clutch/brake mechanism, which can arrest machine motion at any point in the stroke or cycle.

Pass-Through Hazard

A pass-through hazard is associated with applications where personnel may pass through a safeguard (which issues a stop command to remove the hazard), and then continues into the guarded area, such as in perimeter guarding. Subsequently, their presence is no longer detected, and the related danger becomes the unexpected start or restart of the machine while personnel are within the guarded area.

Point of Operation

The location of a machine where material or a workpiece is positioned and a machine function is performed upon it.

PSDI (Presence-Sensing Device Initiation)

An application in which a presence-sensing device is used to actually start the cycle of a machine. In a typical situation, an operator manually positions a part in the machine for the operation. When the operator moves out of the danger area, the presence sensing device starts the machine (no start switch is used). The machine cycle runs to completion, and the operator can then insert a new part and start another cycle. The presence sensing device continually guards the machine. Single-break mode is used when the part is automatically ejected after the machine operation. Double-break mode is used when the part is both inserted (to begin the operation) and removed (after the operation) by the operator. PSDI is commonly confused with "Trip Initiate." PSDI is defined in OSHA CFR1910.217. Banner safety light curtain systems may not be used as PSDI devices on mechanical power presses, per OSHA regulation 29 CFR 1910.217.

Q

Qualified Person

A person who, by possession of a recognized degree or certificate of professional training, or who, by extensive knowledge, training and experience, has successfully demonstrated the ability to solve problems relating to the subject matter and work.

R

Receiver

The light-receiving component of a safety light curtain system, consisting of a row of synchronized phototransistors. The receiver, together with the emitter (placed opposite), creates a "screen of light" called the defined area.

Reduced Resolution

A feature that allows a safety light curtain system to be configured to produce an intentionally disabled light beam(s) within the light curtain, which increases the minimum object sensitivity. The disabled beam(s) appears to move up and down (float) to allow the feeding of an object through the defined area at any point without tripping the safety outputs (for example, OSSDs) and causing a Auto Start/Restart (Trip) or Manual Start/Restart (Latch) condition. Sometimes called Floating Blanking.

Reset

The use of a manually operated switch to restore the safety outputs to the On state from a lockout or a Manual Start/Restart (Latch) condition.

Resolution

See **Minimum Object Sensitivity**.

S

Self-Checking (Circuitry)

A circuit with the capability to electronically verify that all of its own critical circuit components, along with their redundant backups, are operating properly. Banner safety light curtain systems and safety modules are self-checking.

Safety Distance

The minimum distance required to allow the machine's hazardous motion to stop completely, before a hand (or other object) can reach the nearest hazard point. Measured from the midpoint of the defined area to the nearest hazard point. Factors that influence minimum separation distance include the machine stop time, the light curtain system response time, and the light curtain minimum object detection size.

Specified Test Piece

An opaque object of sufficient size used to block a light beam to test the operation of a safety light curtain system. When inserted into the defined area and placed in front of a beam, the test piece causes the outputs to de-energize.

Supplemental Guarding

Additional safeguarding device(s) or hard guarding, used to prevent a person from reaching over, under, through or around the primary safeguard or otherwise accessing the guarded hazard.

T

Test Piece

An opaque object of sufficient size used to block a light beam to test the operation of a safety light curtain system.

Auto Start/Restart (Trip) Condition

The safety outputs of a safety light curtain system turn off when an object completely blocks a beam. In an Auto Start/Restart condition, the safety outputs re-energize when the object is removed from the defined area.

Auto Start/Restart (Trip) Initiate

The resetting of a safeguard causing the initiation of machine motion or operation. Auto Start/Restart Initiate is not allowed as a means to initiate a machine cycle per NFPA 79 and ISO 60204-1, and is commonly confused with PSDI.

U

UL (Underwriters Laboratory)

A third-party organization that tests products for compliance with appropriate standards, electrical codes, and safety codes. Compliance is indicated by the UL listing mark on the product.

Index

A

accessories
  alignment aids 55
  brackets 54
  cordsets 47–50
  EZ-LIGHTs for EZ-SCREENs 51
  MSM corner mirrors 52
  muting module 51
  safety controller 50
  safety modules 51
  snap-on lens shield 51
  SSM corner mirrors 53
adjacent reflective surfaces 17
alignment
  mechanical 28
  optical 34
alignment aids
  accessories 55
applications
  appropriate 9, 10
  inappropriate 10
applications and limitation 9, 10
applying power 45

B

brackets
  accessories 54
  assembly instructions 26
  end mount 23, 24
  side mount 25, 27

C

checkout
  commissioning 40
  initial 33, 34, 36
  periodic 45
  schedule of 46
control reliability 11
cordsets
  accessories 47–50
  maximum length 32
  routing 32
corner mirrors 19

D

dimensions 29

E

EDM 38
electrical connections
  initial 33
emitter and receiver orientation 20
error codes
  emitter 56
  receiver 57
external device monitoring (EDM) 38
EZ-LIGHTs for EZ-SCREENs
  accessories 51

F

features 7

H

hazards
  reducing 15

I

inappropriate applications 10
initial power-up 34
installation
  electrical 32–34, 36–42
  mechanical 13–17, 19–29
  multiple systems 21

L

lockout conditions 56

M

mirrors
  optical alignment 36
mounting hardware 22–27
MSM corner mirrors
  accessories 52
muting module
  accessories 51

N

noise 57

O

operating features 7
optical alignment 34
optical alignment with mirrors 36
orientation 20
OSSD 38
output signal switching device (OSSD) 38

P

power
  applying 45
protective stop circuit 38

R

recovery procedures 56, 57
reflective surfaces 17
run mode 45

S

safety controller 50
safety distance formula 14
safety modules
  accessories 51
safety stop circuit 38
sensor interchangeability 39
snap-on lens shield
  accessories 51
specifications 11
SSM corner mirrors
  accessories 53
status indicators 43, 44
supplemental safeguarding 16
system power-up 45

T

trip test 36

W

wiring
  emitter 42
  safety module 42