EZ-LIGHT® K90TFDL Daylight Visible

Datasheet

Large multicolor daylight visible indicator that alternates between active inputs

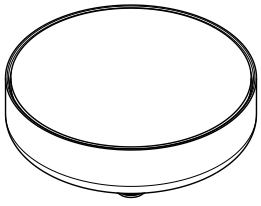

- Intense levels of light output for areas with high ambient light - even outdoors
- Alternates between colors when multiple inputs are active
- Models are available with up to five colors in one device
- Rugged IEC IP67-rated design
- 12 V DC to 30 V DC operation

Models

Model	# of Colors	Colors	Connection	Input
K90TFDLGRPQ	2	Green, Red	Integral 5-pin M12/Euro-style male quick disconnect	PNP
K90TFDLGYRPQ	3	Green, Yellow, Red		
K90TFDLBGYRPQ	4	Blue , Green, Yellow, Red		
K90TFDLWBGYRPQ	5	White, Blue, Green, Yellow, Red	Integral 8-pin M12/Euro-style male quick disconnect	
K90TFDLGRNQ	2	Green, Red	Integral 5-pin M12/Euro-style male quick disconnect	NPN
K90TFDLGYRNQ	3	Green, Yellow, Red		
K90TFDLBGYRNQ	4	Blue , Green, Yellow, Red		
K90TFDLWBGYRNQ	5	White, Blue, Green, Yellow, Red	Integral 8-pin M12/Euro-style male quick disconnect	

Integral quick disconnect models are listed; a mating cordset is required (see Accessories on p. 3).

- To order the 150 mm (5.9 in) PVC cable with QD models, replace **Q** with **QP** in the model number, for example, K90TFDLGRPQP.
- To order the 2 m (6.5 ft) cable models, omit the suffix **Q** in the model number, for example, K90TFDLGRP.

Original Document
188930 Rev. D

12 December 2019

188930

ПРОМЭЛЕКТРОНИКА/ sales@prom-elec.com

Specifications

Supply Voltage and Current
12 V DC to 30 V DC
475 mA maximum at 12 V DC
175 mA maximum at 30 V DC

Supply Protection Circuitry
Protected against reverse polarity and transient voltages

Input Response Time
75 ms maximum

Light Characteristics

Color	Typical Wavelength or Color Temperature	Typical Intensity
Red	625 nm	83 lumens
Yellow	590 nm	43 lumens
Green	525 nm	175 lumens
Blue	470 nm	55 lumens
White	4700 K – 5300 K	235 lumens

Construction
Base and dome: Polycarbonate

Connections
Integral 5-pin M12/Euro-style male quick disconnect; Integral 8-pin M12/Euro-style male quick disconnect; 150 mm (6 in) PVC cable with a 5-pin M12/Euro-style male quick disconnect; 150 mm (6 in) PVC cable with a 8-pin M12/Euro-style male quick disconnect; or 2 m (6.5 ft) unterminated 3-wire PVC-jacketed cable depending on the model

Indicators
1 to 5 colors, depending on the model
Only one color can be on at a time. The higher color number overrides the lower color number.

Environmental Rating
IEC IP67; Enclosure UL Type 4X, 13

Vibration and Mechanical Shock
All models meet MIL-STD-202F, Method 201A (Vibration: 10 Hz to 60 Hz maximum, 0.06 inch (1.52 mm) double amplitude, 10G maximum acceleration) requirements. Also meets IEC 60947-5-2 (Shock: 30G 11 ms duration, half sine wave) requirements.

Operating Conditions
–40 °C to +50 °C (–40 °F to +122 °F)

Certifications

Dimensions

All measurements are listed in millimeters [inches], unless noted otherwise.

Quick Disconnect Models

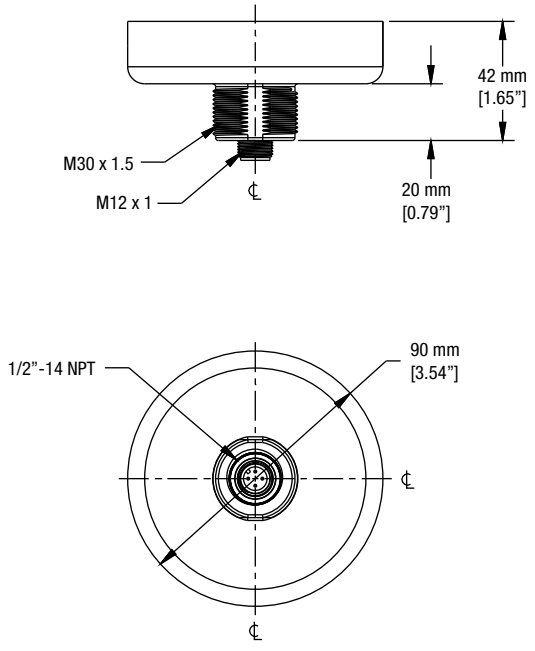

Cabled Models

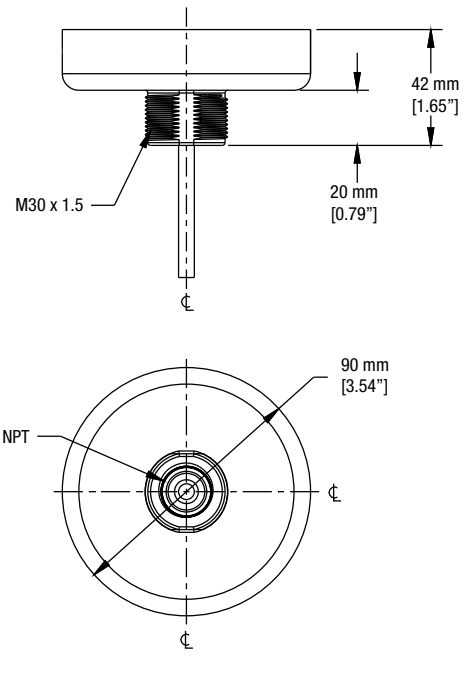

Wiring

When multiple inputs are on at the same time, the indicator cycles between colors at a rate of 1 Hz.

5-Pin PNP Input

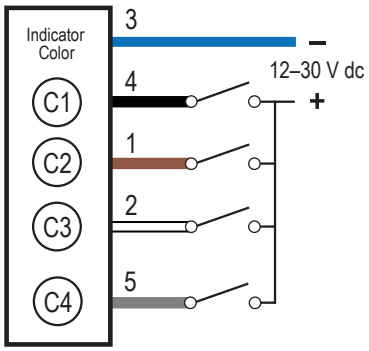

5-Pin NPN Input

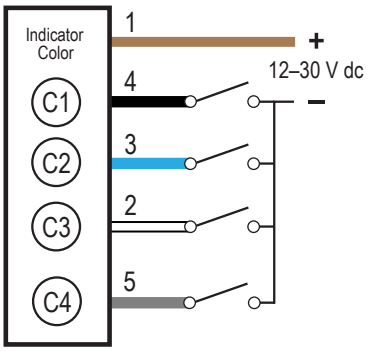

Key

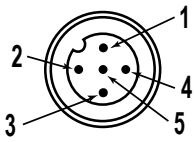

1 = Brown
2 = White
3 = Blue
4 = Black
5 = Gray

8-Pin PNP Input

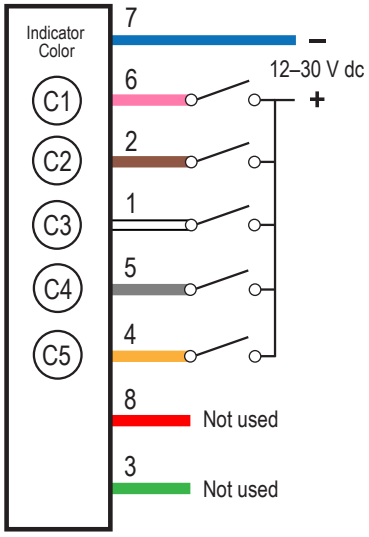

8-Pin NPN Input

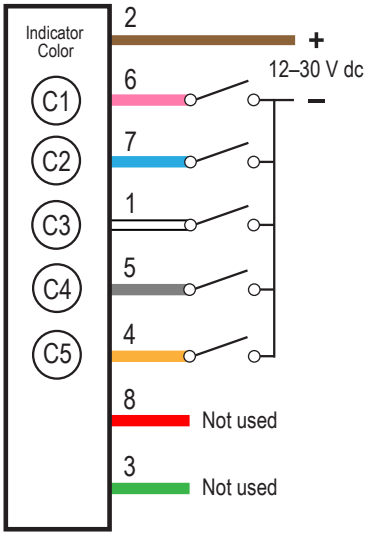

Key

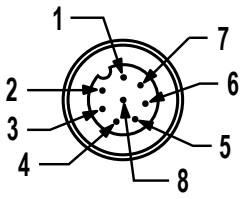

1= White
2 = Brown
3 = Green
4 = Yellow
5 = Gray
6 = Pink
7 = Blue
8 = Red

The red and green wires are not used.

Accessories

Cordsets

5-Pin Threaded M12/Euro-Style Cordsets—Single Ended				
Model	**Length**	**Style**	**Dimensions**	**Pinout (Female)**
MQDC1-501.5	0.50 m (1.5 ft)	Straight	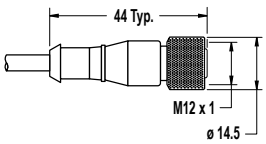	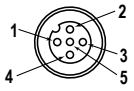 1 = Brown 2 = White 3 = Blue 4 = Black 5 = Gray
MQDC1-506	1.83 m (6 ft)			
MQDC1-515	4.57 m (15 ft)			
MQDC1-530	9.14 m (30 ft)			

5-Pin Threaded M12/Euro-Style Cordsets—Single Ended				
Model	**Length**	**Style**	**Dimensions**	**Pinout (Female)**
MQDC1-506RA	1.83 m (6 ft)	Right-Angle	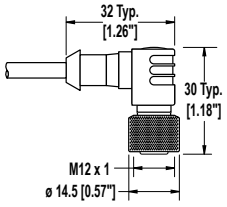	
MQDC1-515RA	4.57 m (15 ft)			
MQDC1-530RA	9.14 m (30 ft)			

8-Pin Threaded M12/Euro-Style Cordsets with Open-Shield				
Model	**Length**	**Style**	**Dimensions**	**Pinout (Female)**
MQDC2S-806	1.83 m (6 ft)	Straight	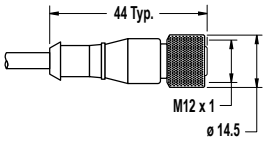	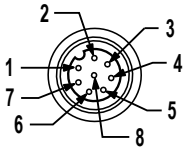 1 = White 2 = Brown 3 = Green 4 = Yellow 5 = Gray 6 = Pink 7 = Blue 8 = Red
MQDC2S-815	4.57 m (15 ft)			
MQDC2S-830	9.14 m (30 ft)			
MQDC2S-850	15.2 m (50 ft)			
MQDC2S-806RA	1.83 m (6 ft)	Right-Angle	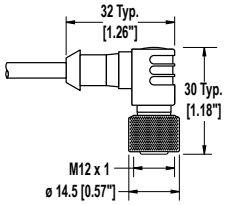	
MQDC2S-815RA	4.57 m (15 ft)			
MQDC2S-830RA	9.14 m (30 ft)			
MQDC2S-850RA	15.2 m (50 ft)			

Elevated Mount System

Model			Features	Components
SA-M30 - Black Polycarbonate			• Streamlined black PC or Gray PC thread cover • Covers M30 thread on the light base • Mounting hardware included	
SA-M30C - Gray Polycarbonate				
Polished 304 Stainless Steel	**Black Anodized Aluminum**	**Clear Anodized Aluminum**	• Elevated-use stand-off pipe (½ in. NPSM/DN15) • Polished 304 stainless steel, black anodized aluminum, or clear anodized aluminum surface • ½ in. NPT thread at both ends • Compatible with most industrial environments	
SOP-E12-150SS 150 mm (6 in) long	**SOP-E12-150A** 150 mm (6 in) long	**SOP-E12-150AC** 150 mm (6 in) long		
SOP-E12-300SS 300 mm (12 in) long	**SOP-E12-300A** 300 mm (12 in) long	**SOP-E12-300AC** 300 mm (12 in) long		
SOP-E12-900SS 900 mm (36 in) long	**SOP-E12-900A** 900 mm (36 in) long	**SOP-E12-900AC** 900 mm (36 in) long		
SA-E12M30 - Black Acetal			• Streamlined black acetal or white UHMW mounting base adapter/cover • Connects between ½ in. NPSM/DN15 pipe and 30 mm (1-3/16 in) drilled hole • Mounting hardware included	
SA-E12M30C - White UHMW				

Pipe Mounting Flange			
Model	**Features**	**Construction**	
SA-F12	• Elevated-use stand-off pipes (½ in, NPSM/DN15) • M5 mounting hardware and nitrile gasket included	Die-cast zinc base with black paint	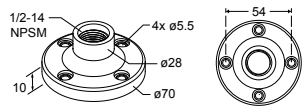

Foldable Mounting Brackets			
Model	**Features**	**Construction**	
SA-FFB12	• For use with 1/2 inch stand-off pipes • Stainless steel hardware	Black polycarbonate	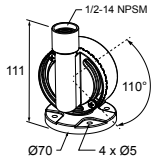
SA-FFB12C		Gray polycarbonate	

LMB Sealed Right-Angle Brackets

Model	Description	Construction	
LMB30RA	**Direct-Mount Models:** Bracket kit with base, 30 mm adapter, set screw, fasteners, O-rings, and gaskets.	Black polycarbonate	
LMB30RAC		Gray polycarbonate	
LMBE12RA	**Pipe-Mount Models:** Bracket kit with base, ½-14 pipe adapter, set screw, fasteners, O-rings, and gaskets. For use with stand-off pipe (listed and sold separately).	Black polycarbonate	
LMBE12RAC		Gray polycarbonate	

Sun Shield

K90DS • Use for enhanced visibility in direct sunlight conditions • Polycarbonate	

Banner Engineering Corp. Limited Warranty

Banner Engineering Corp. warrants its products to be free from defects in material and workmanship for one year following the date of shipment. Banner Engineering Corp. will repair or replace, free of charge, any product of its manufacture which, at the time it is returned to the factory, is found to have been defective during the warranty period. This warranty does not cover damage or liability for misuse, abuse, or the improper application or installation of the Banner product.

THIS LIMITED WARRANTY IS EXCLUSIVE AND IN LIEU OF ALL OTHER WARRANTIES WHETHER EXPRESS OR IMPLIED (INCLUDING, WITHOUT LIMITATION, ANY WARRANTY OF MERCHANTABILITY OR FITNESS FOR A PARTICULAR PURPOSE), AND WHETHER ARISING UNDER COURSE OF PERFORMANCE, COURSE OF DEALING OR TRADE USAGE.

This Warranty is exclusive and limited to repair or, at the discretion of Banner Engineering Corp., replacement. **IN NO EVENT SHALL BANNER ENGINEERING CORP. BE LIABLE TO BUYER OR ANY OTHER PERSON OR ENTITY FOR ANY EXTRA COSTS, EXPENSES, LOSSES, LOSS OF PROFITS, OR ANY INCIDENTAL, CONSEQUENTIAL OR SPECIAL DAMAGES RESULTING FROM ANY PRODUCT DEFECT OR FROM THE USE OR INABILITY TO USE THE PRODUCT, WHETHER ARISING IN CONTRACT OR WARRANTY, STATUTE, TORT, STRICT LIABILITY, NEGLIGENCE, OR OTHERWISE.**

Banner Engineering Corp. reserves the right to change, modify or improve the design of the product without assuming any obligations or liabilities relating to any product previously manufactured by Banner Engineering Corp. Any misuse, abuse, or improper application or installation of this product or use of the product for personal protection applications when the product is identified as not intended for such purposes will void the product warranty. Any modifications to this product without prior express approval by Banner Engineering Corp will void the product warranties. All specifications published in this document are subject to change; Banner reserves the right to modify product specifications or update documentation at any time. Specifications and product information in English supersede that which is provided in any other language. For the most recent version of any documentation, refer to: www.bannerengineering.com.

For patent information, see www.bannerengineering.com/patents.

© Banner Engineering Corp. All rights reserved