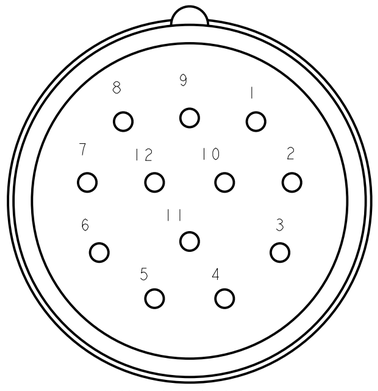

FRONT VIEW (MALE)
SCALE 4:1

P1

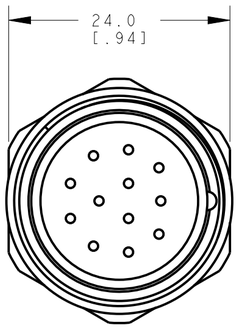

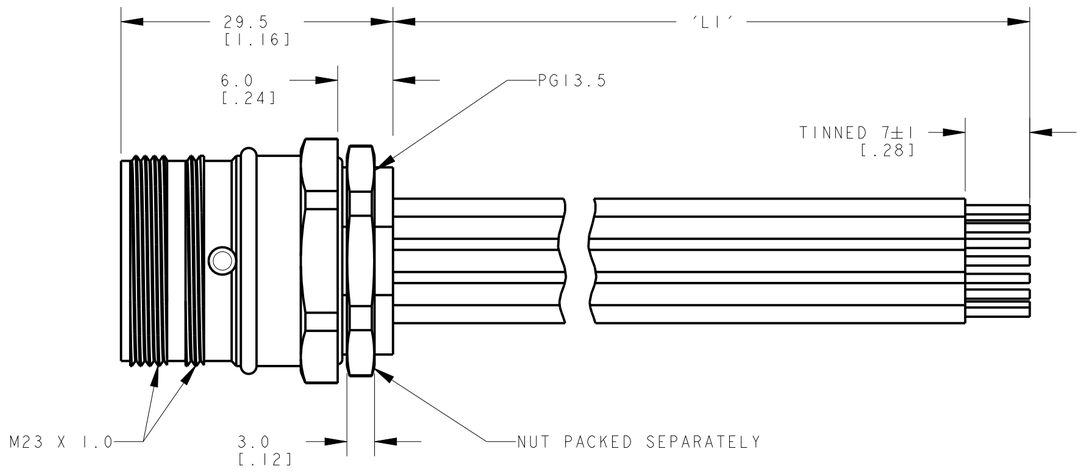

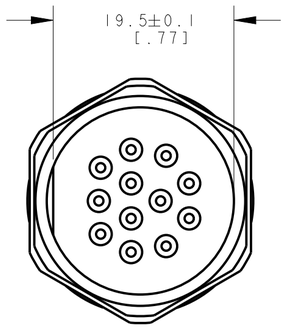

CONNECTOR PIN-OUT			
PIN	WIRE COLOR	PIN	WIRE COLOR
1	WHITE	7	BLUE
2	BROWN	8	RED
3	GREEN	9	ORANGE
4	YELLOW	10	TYRIAN PURPLE
5	GREY	11	BLACK
6	PINK	12	VIOLET

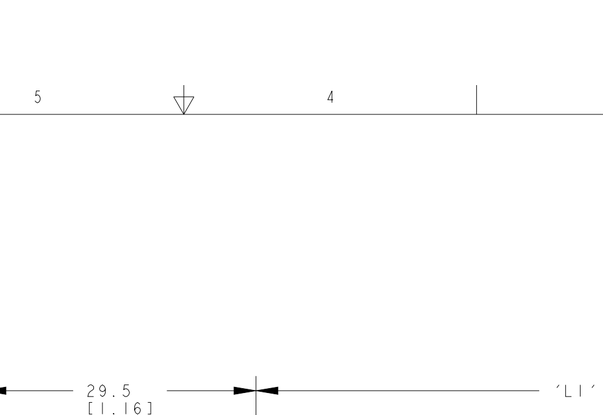

RECOMMENDED PANEL CUT-OUT

NOTES:
1. ALL DIMENSIONS ARE MILLIMETERS [INCHES] UNLESS OTHERWISE NOTED.
2. REFER TO "www.bannerengineering.com" FOR ADDITIONAL DATA AND SPECIFICATIONS.

This drawing is the property of BANNER ENGINEERING CORP. Any use or reproduction, in any form, without prior written permission of Banner is prohibited.
© 2015 Banner Engineering Corp.

THIRD ANGLE PROJECTION

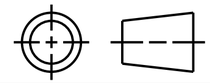

BANNER ENGINEERING CORP.
www.bannerengineering.com

TITLE
BR-M23M12F13-X

SIZE	DRAWING NO.	REV.
C	242017	A

SCALE	SHEET
2:1	1 OF 1

CREO

ПРОМЭЛЕКТРОНИКА/ sales@prom-elec.com